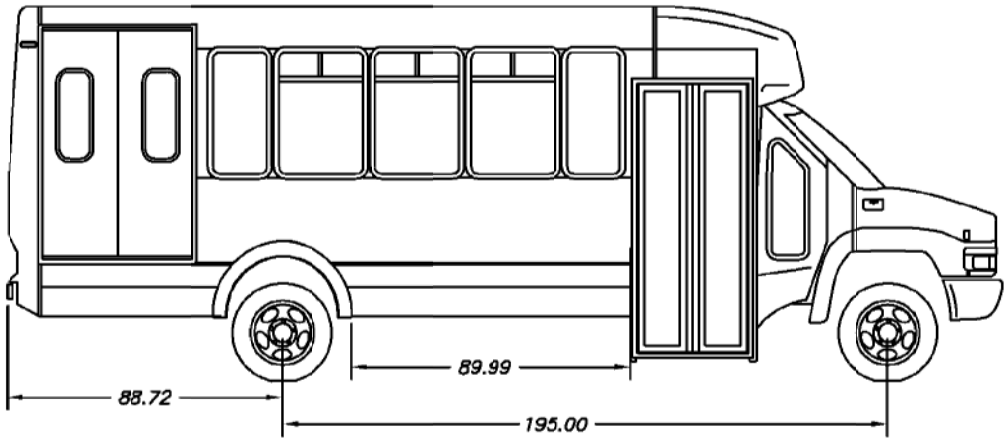

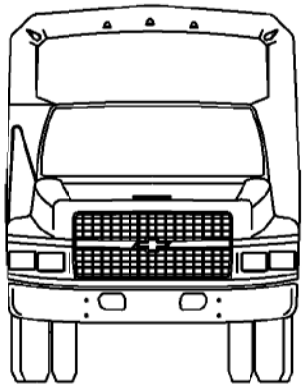

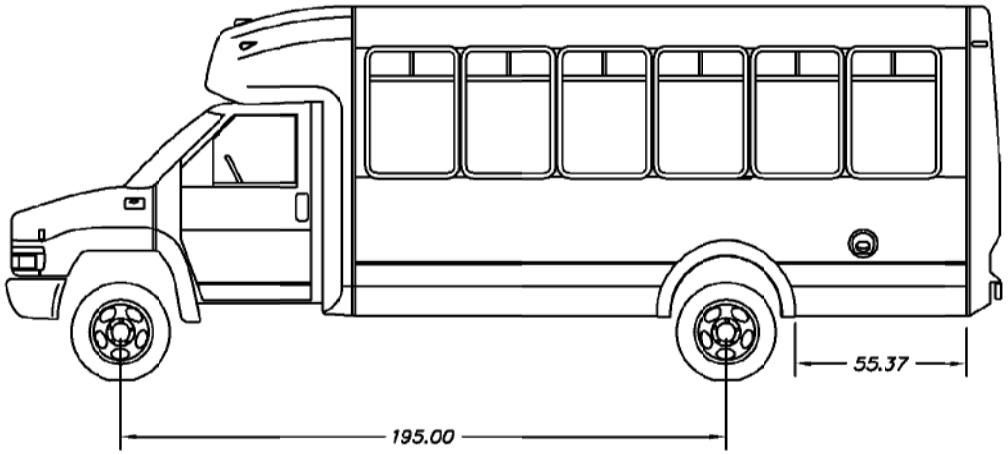

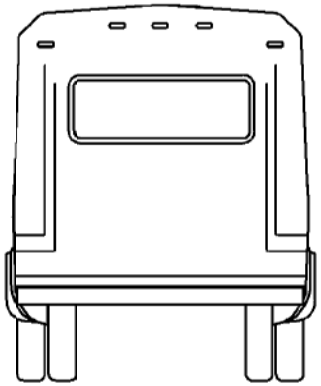

ElDorado National
— a THOR company —
1655 WALL STRE
SALINA, KS. 674

NEXT ASSEMBLY: NONE	DRAWING INFORMATION						
SUPERCEDES: NONE	DRAWN: MCQUILLAN	CKD:					
DO NOT SCALE DRAWING	DATE:	SIZE: A					
MARK PART NUMBER AND REVISION ON ALL PARTS	SCALE: 1/64	WGT:					
THIS DRAWING IS THE PROPERTY OF ELDORADO NATIONAL COMPANY, A THOR INDUSTRIES COMPANY AND IS NOT TO BE DUPLICATED OR USED IN ANY WAY DETRIMENTAL TO THEIR BEST INTEREST. REV. 02/02	TOLERANCE UNLESS SPECIFIED						
	FRACTIONS ± 1/16 DECIMALS .00 ± .06 ANGLES + 1 DEG.		–	BJM		RELEASE TO PRODUCTION	
			REV.	BY	DATE	DESCRIPTION	RELEASE #

TITLE:
ELEVATION VIEWS, 270 CHEVY ELITE
36" ENTRY DOOR / WC DOOR (REAR)

MATERIAL SPEC:

PART NUMBER
ELEV2711

PAGE
1 OF 1