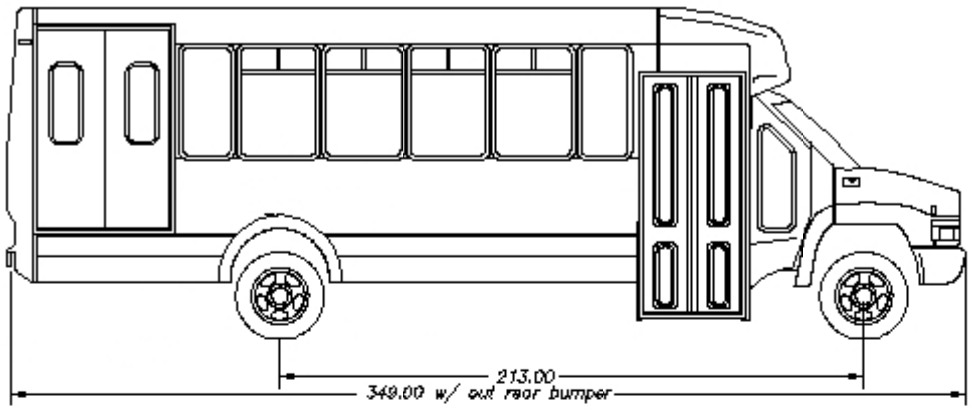


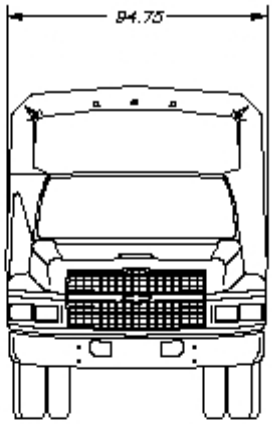


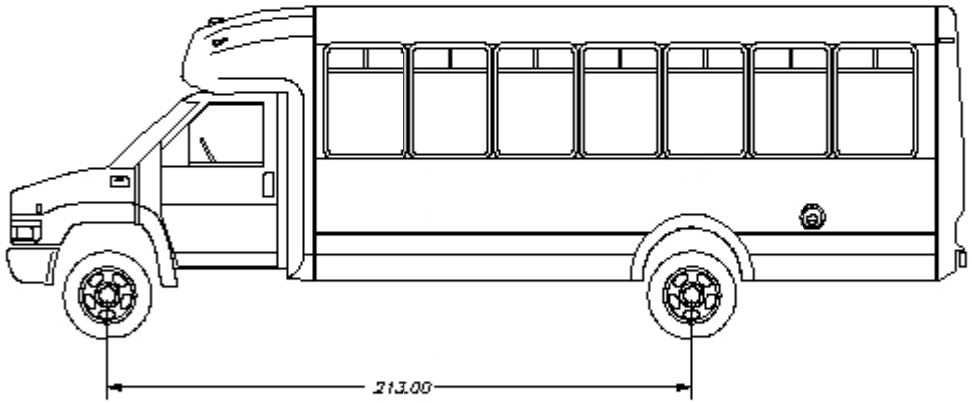


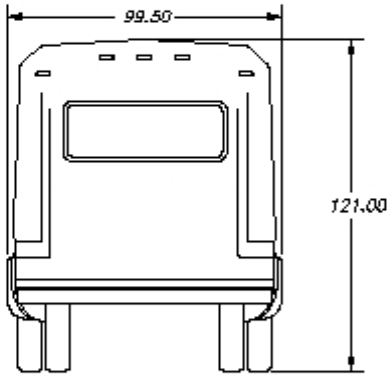


NOTE: OVERALL HEIGHT MAY VARY DUE TO SPRING PKG OPTIONS AND DOES NOT REFLECT A ROOF HATCH.

213" WHEELBASE  29.50 X 41.50 WINDOWS SHOWN  36" ENTRY DOOR  REAR W/C DOOR

| | | | | | | | |
|---|---|---|---|---|---|---|---|
| NEXT ASSEMBLY: NONE | DRAWING INFORMATION | | | | | | |
| SUPERCEDES: NONE | DRAWN: MCQUILLAN | CKD: | | | | | |
| DO NOT SCALE DRAWING | DATE: | SIZE: A | | | | | |
| MARK PART NUMBER AND REVISION ON ALL PARTS | SCALE: 1/64 | WGT: | | | | | |
| THIS DRAWING IS THE PROPERTY OF ELDORADO NATIONAL COMPANY, A THOR INDUSTRIES COMPANY AND IS NOT TO BE DUPLICATED OR USED IN ANY WAY DETRIMENTAL TO THEIR BEST INTEREST. REV. 02/02 | TOLERANCE UNLESS SPECIFIED | | | | | | |
| | FRACTIONS ± 1/16 | – | BJM | | RELEASE TO PRODUCTION | | |
| | DECIMALS .00 ± .06 | | | | | | |
| | ANGLES ± 1 DEG. | REV. | BY | DATE | DESCRIPTION | RELEASE # | |

ElDorado National
— a THOR company —
1655 WALL STREET
SALINA, KS. 67401

TITLE:
ELEVATION VIEWS, 290 CHEVY ELITE
36" ENTRY DOOR / WC DOOR (REAR)

MATERIAL SPEC:

PART NUMBER
ELEV2911

PAGE
1 OF 1