DIST	COUNTY	ROUTE	KILOMETER POST TOTAL PROJECT	SHEET No	TOTAL SHEETS

REGISTERED CIVIL ENGINEER

JUNE 27, 2005
PLANS APPROVAL DATE

REGISTERED PROFESSIONAL ENGINEER TILLAT SATTER No. C42892 Exp. 3-31-06 CIVIL STATE OF CALIFORNIA

The State of California or its officers or agents shall not be responsible for the accuracy or completeness of electronic copies of this plan sheet.

Caltrans Metric

Caltrans now has a web site! To get to the web site, go to: http//www.dot.ca.gov

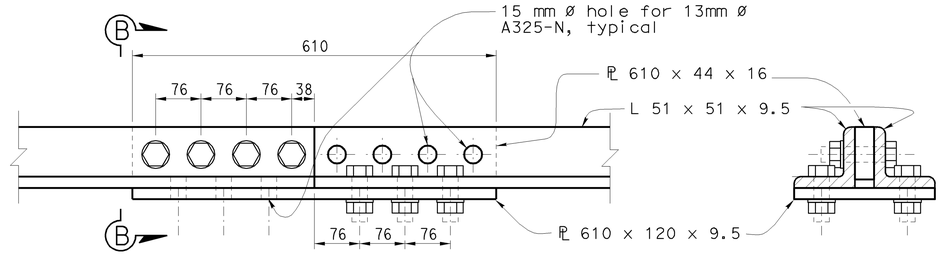

ELEVATION

SECTION B-B

ANGLE SPLICE DETAILS

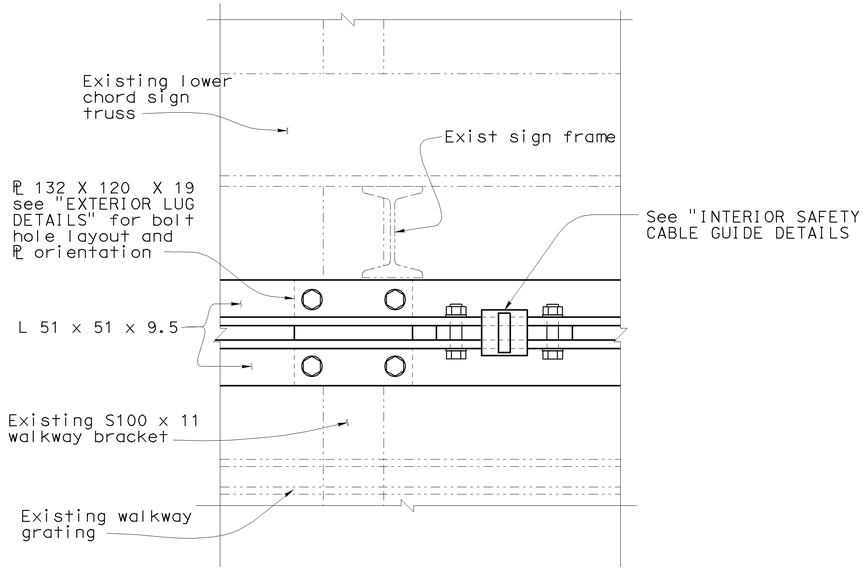

PLAN

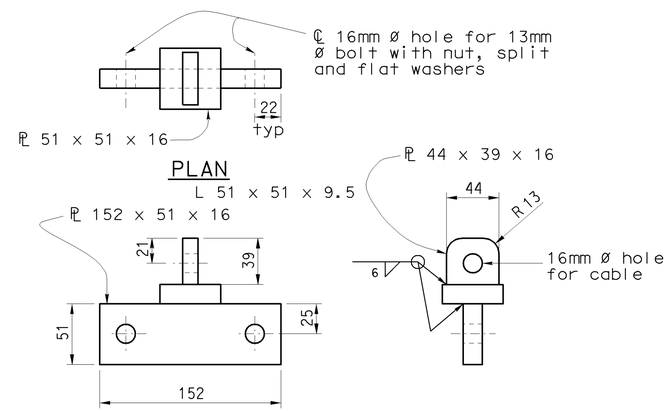

PLAN

FRONT ELEVATION

SIDE ELEVATION

NOTE:
Interior cable guide spacing to be max. 1676mm CC

INTERIOR CABLE GUIDE DETAILS

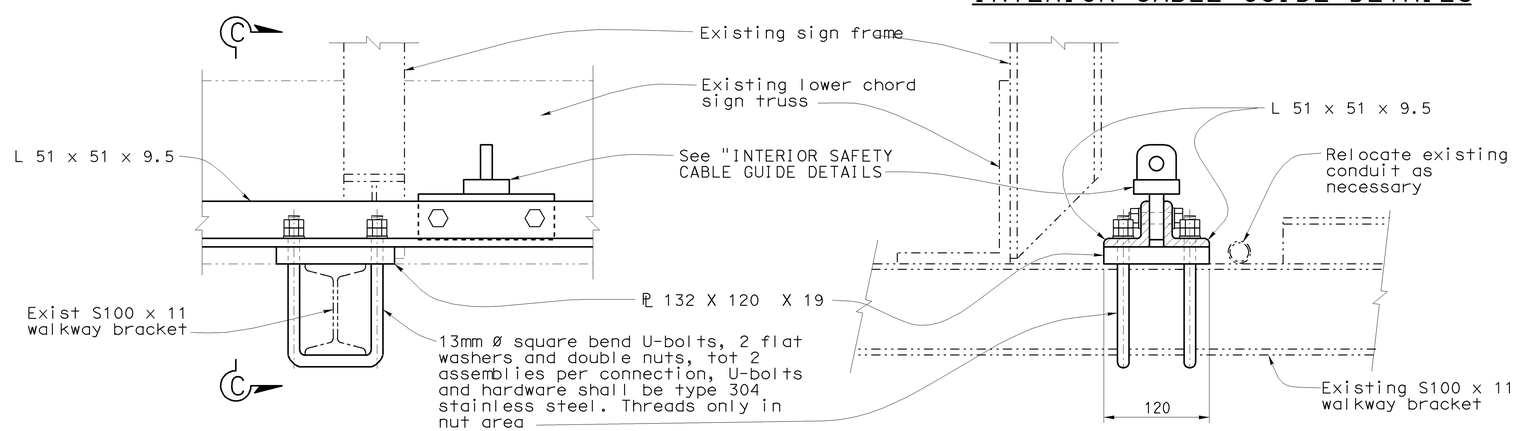

ELEVATION

SECTION C-C

INTERIOR SAFETY CABLE GUIDE AND ANGLE ANCHORAGE DETAILS

no scale

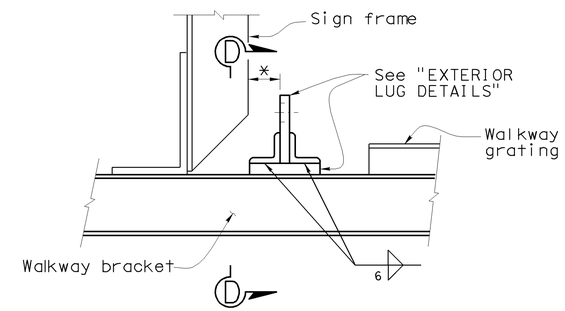

ELEVATION

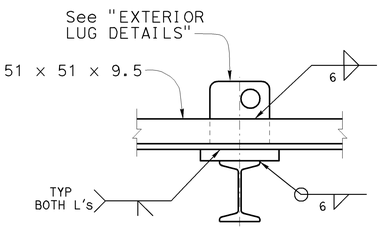

SECTION D-D

ALTERNATIVE EXTERIOR SAFETY CABLE LUG ANCHORAGE DETAILS

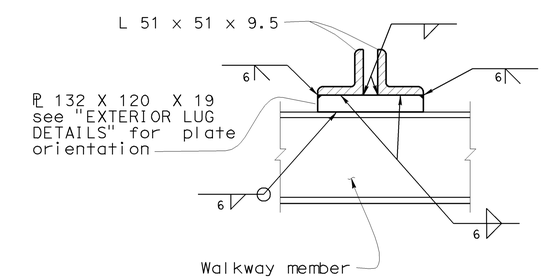

ALTERNATIVE INTERIOR WALKWAY SAFETY ANGLE CONNECTION

OPTIONAL WELD DETAILS

Optional for structures not yet fabricated, but designed to 1999 Standard Plans.

THE CONTRACTOR SHALL VERIFY ALL CONTROLLING FIELD DIMENSIONS BEFORE ORDERING OR FABRICATING ANY MATERIAL.

OVERHEAD SIGN SAFETY CABLE RETROFIT 2

DETAILS	QUANTITIES
DATE	
CALCULATED/ DESIGNED BY	
CHECKED BY	

PROJECT ENGINEER

STATE OF CALIFORNIA - DEPARTMENT OF TRANSPORTATION
Caltrans SPECIAL DESIGNS BRANCH

LAST REVISION 6-27-05

DATE PLOTTED => 27-JUL-2005
TIME PLOTTED => 12:48

ORIGINAL SCALE IN MILLIMETERS FOR REDUCED PLANS 0 10 20 30 40 50 60 70 80 90 100

USERNAME => pwells
DGN FILE => lug02.dgn

CU | EA