BILL OF MATERIALS

ITEM	QTY	DESCRIPTION
101	1	DECAL, highways.dot.ca.gov CT# 053-4787
102	1	DECAL, highways.dot.ca.gov CT# 053-4788

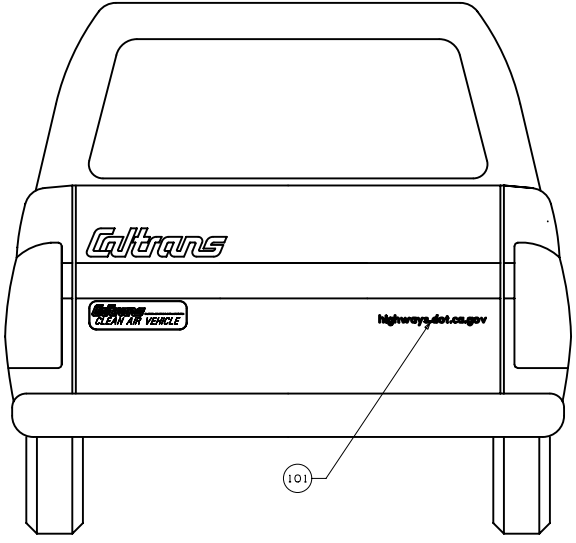

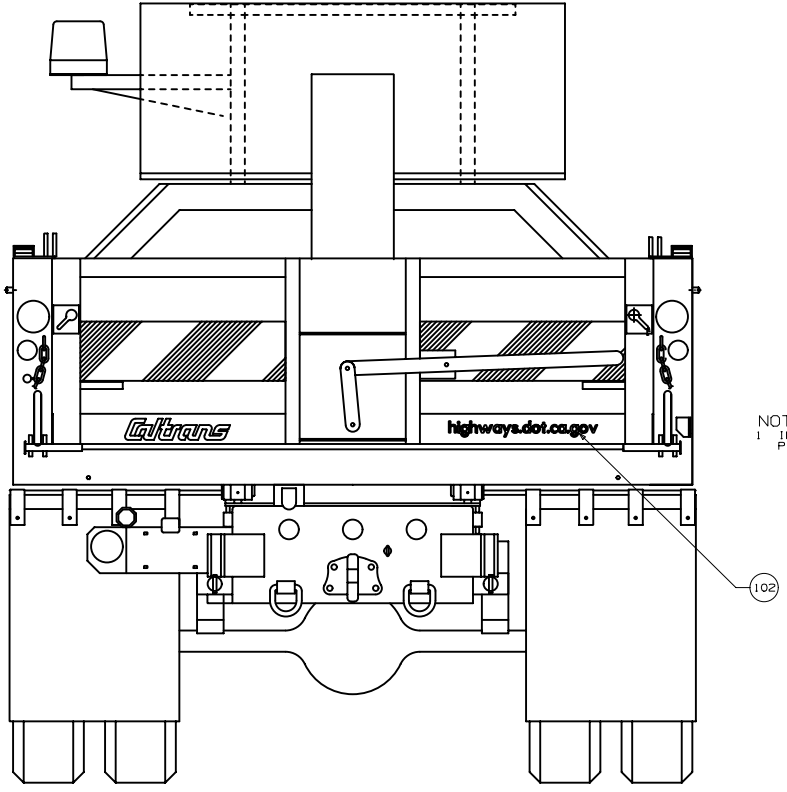

NOTES:
1 INSTALL ITEMS 101 AND 102 ON MAINTENANCE PICKUPS AND 4 YARD DUMP TRUCKS ONLY.

REV	DESCRIPTION	BY
A	09/04 ADD "4 YARD" TO NOTE	DOWNIN

NEXT ASSEMBLY
x

TOLERANCE-UNLESS OTHERWISE SPECIFIED
DECIMAL ±
FRACTIONAL ± ×
ANGULAR ±
DRILLED HOLES +
REAMED HOLES ±

STATE OF CALIFORNIA
DEPARTMENT OF TRANSPORTATION
DIVISION OFEQUIPMENT

DECAL, WWW, MAINTENANCE VEHICLE

SCALE	x	DATE 14 Jan 02	I-000-dot.ca-01
DRAWN J Payne		DESIGNED x	
CHECKED		APPROVED	SHEET 1 OF 1 SHEETS