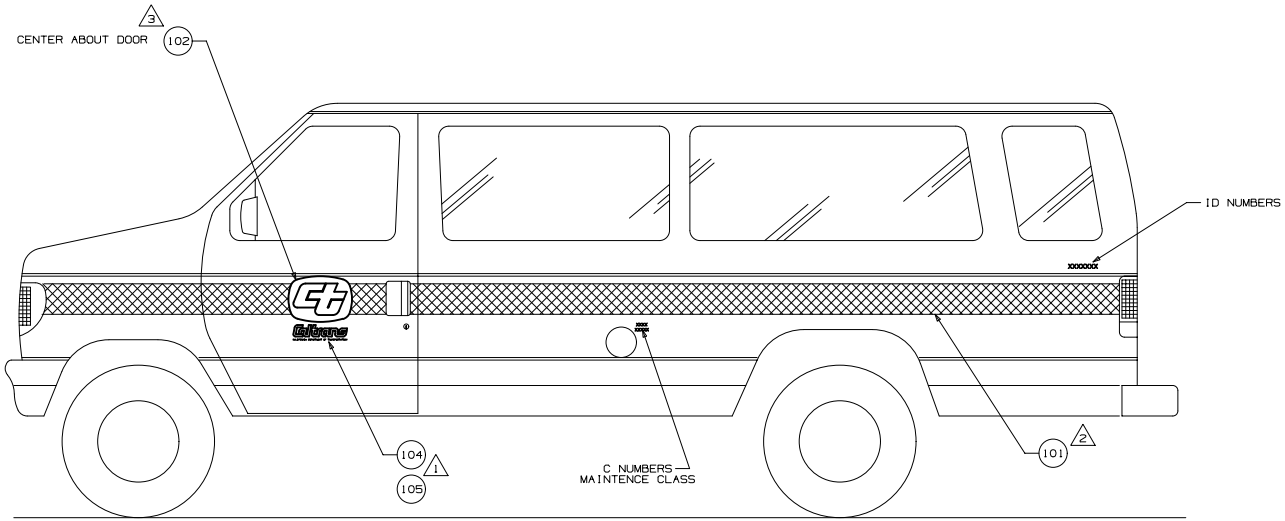

LEFT SIDE VIEW

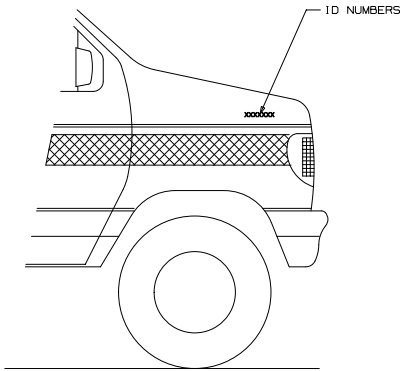

RIGHT FRONT VIEW

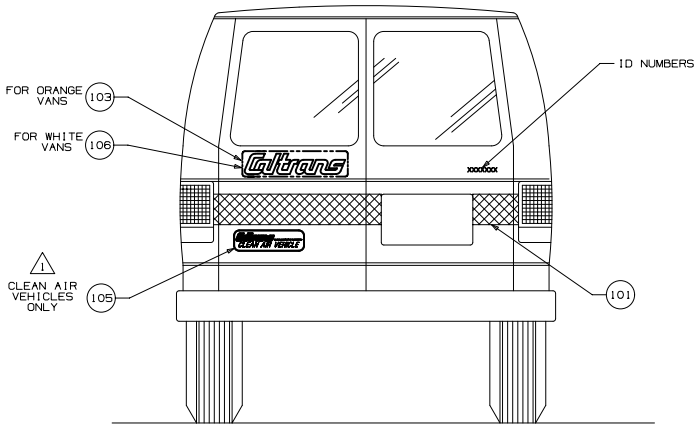

REAR VIEW

BILL OF MATERIALS

ITEM	QTY	DESCRIPTION
101	AR	3M SCOTCHLITE ORANGE REFLECTIVE TAPE 3M #680-14 6" WIDE CT #053-4751
102	2	DECAL, "CT" CT #053-4760
103	1	DECAL, "CALTRANS" CT #053-4753 COLOR-WHITE DWG #03-D002-01
104	2	DECAL, "CT" CT #053-4763
105	3	DECAL, "CLEAN AIR VEHICLE" CT #053-4758 DWG #03-D003-01
106	1	DECAL, "CALTRANS" CT #053-4801 COLOR-ORANGE DWG #03-D007-01

NOTES:

1. IF CLEAN AIR VEHICLE REPLACE WITH ITEM 105.

2. LOWER EDGE OF ITEM 101 TO BE LOCATED AS NEAR TO THE HORIZONTAL CENTERLINE OF THE VEHICLE AS BODY CUTOUT (FENDER WELLS) AND BODY CONTOUR LINES PERMIT. NEVER PLACE THE LOWER EDGE OF ITEM 101 BELOW THE HORIZONTAL CENTER LINE OF THE VEHICLE.

3. ITEM 102 TO BE LOCATED SUCH THAT "CT" LOGO IS CENTERED ON ITEM 101 AND CENTERED ON THE VERTICAL CENTER LINE OF THE DOOR.

4. ALL WELDS, ELECTRICAL AND PAINT WILL BE IN COMPLIANCE WITH CALTRANS EQUIPMENT QUALITY STANDARDS. GO TO www.dot.ca.gov/hq/eqsc TO VIEW EQUIPMENT QUALITY STANDARDS.

REV	DESCRIPTION	BY

NEXT ASSEMBLY

TOLERANCE-UNLESS OTHERWISE SPECIFIED
DECIMAL ± NA
FRACTIONAL ± NA
ANGULAR ± NA
DRILLED HOLES + NA
REAMED HOLES ± NA

STATE OF CALIFORNIA
DEPARTMENT OF TRANSPORTATION
DIVISION OF EQUIPMENT

SAFETY STRIPING PATTERN
00870 VAN

SCALE AS NOTED	DATE 04/10/02	I-00870-DE	
DRAWN J.RIME	DESIGNED CAL S.		
CHECKED	APPROVED	SHEET 1 OF 1 SHEETS	