BILL OF MATERIALS

ITEM	QTY	DESCRIPTION	CT STK #
101	AR	3M SCOTCHLITE ORANGE REFLECTIVE TAPE 3M# 680-14 5" WIDE	053-4813
102	2	DECAL, "CT" DWG# 03-D004-01	053-4760
103	1	DECAL, "CALTRANS" ORANGE DWG# 03-D007-01	053-4801
104	2	DECAL, BLK "CALTRANS" DWG# 03-D005-01	053-4763
105	1	STRIPING, ORANGE & WHITE DIAGONAL AVERY-DENNISON 911	053-2047

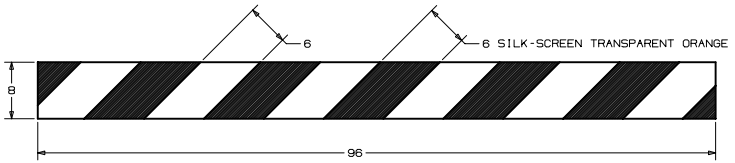

ITEM 105

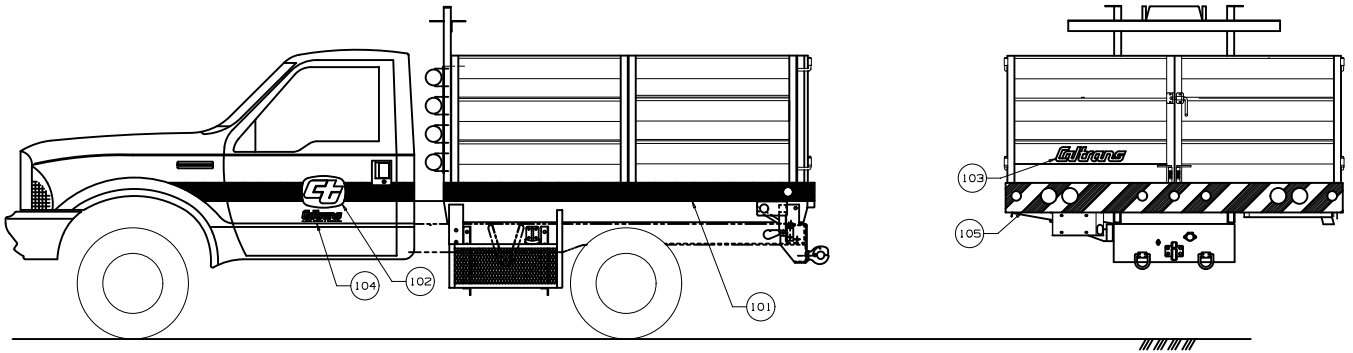

(101) ALIGN STRIPE ON CAB & FENDER TO BODY SIDE RAIL

(102) ITEM 102 TO BE LOCATED SUCH THAT THE "CT" LOGO IS CENTERED ON ITEM 101 & CENTERED ON THE CENTER LINE OF THE DOOR.

(103) ITEM 103 TO BE CENTERED ON A 101 BACK GROUND

REV	DATE	DESCRIPTION	BY
A	1/02	ITEM 101, 580 TO 680	DOWNIN

NEXT ASSEMBLY

STATE OF CALIFORNIA
DEPARTMENT OF TRANSPORTATION
OFFICE OF EQUIPMENT

CARGO DECALS & STRIPING

TOLERANCE-UNLESS OTHERWISE SPECIFIED
DECIMAL ±
FRACTIONAL ± 1/8
ANGULAR ±

SCALE AS NOTED	DATE 08/24/01	I-01250-DE	
DRAWN JDR/DOWNIN	DESIGNED CAL		
CHECKED	APPROVED	SHEET 1 OF 1 SHEETS	