BILL OF MATERIALS

ITEM	QTY	DESCRIPTION	MANUF/ DWG NUM	CT NUM
101	AS REQD	3M SCOTCHLITE ORANGE REFLECTIVE TAPE	3M 680-14 (6")	053-2751
102	2	DECAL REFL., "CT"	03-D004-01	053-4759
103	2	DECAL, BLK CALTRANS	03-D005-01	053-4762
104	1	STRIPING, ORANGE AND WHITE DIAGONAL	AVERY-DENNISON 811	053-2047
105	1	DECAL "CALTRANS" 3" WHITE	03-D002-01	053-4752
106	1	DECAL "CALTRANS" 3" ORANGE	03-D007-01	053-4802

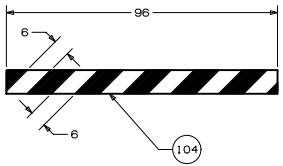

NOTES:
1. ALL WELDS, ELECTRICAL AND PAINT WILL BE IN COMPLIANCE WITH CALTRANS EQUIPMENT QUALITY STANDARDS. GO TO www.dot.ca.gov/hq/eqsc TO VIEW EQUIPMENT QUALITY STANDARDS.
2. ITEM 101 TO BE PLACED ON WHITE BODYS ONLY.
3. ITEM 101 TO BE PLACED AT THE LONGEST HORIZONAL OPEN FLAT AREA OF THE BODY AND CONTINUE AT THE SAME LEVEL ON THE CAB.

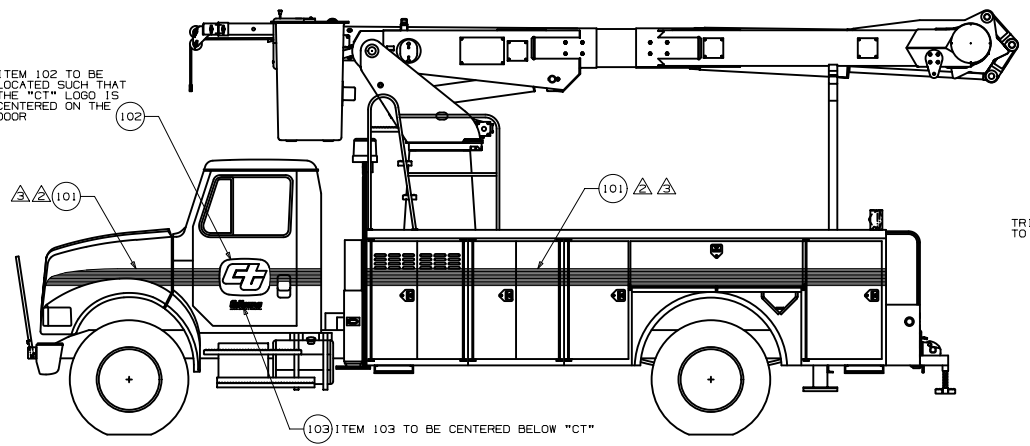

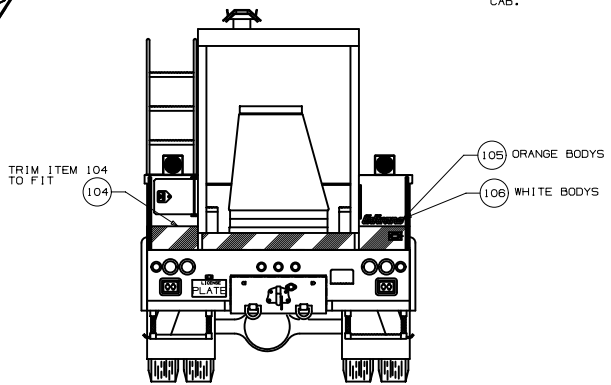

REV	DESCRIPTION	BY

NEXT ASSEMBLY
×

TOLERANCE-UNLESS OTHERWISE SPECIFIED
DECIMAL ±
FRACTIONAL ± 1/16
ANGULAR ±
DRILLED HOLES +
REAMED HOLES ±

STATE OF CALIFORNIA
DEPARTMENT OF TRANSPORTATION
DIVISION OF EQUIPMENT

PERSONNEL HOIST, 45 ft.
DECALS AND STRIPING

SCALE ×	DATE 14 Feb 02	I-03379-DE
DRAWN J Payne	DESIGNED ×	
CHECKED	APPROVED	SHEET 1 OF 1 SHEETS