BILL OF MATERIALS

ITEM	QTY	DESCRIPTION
101	AR	6" ORANGE REFLECTIVE STRIPING STOCK#: 053-4751
102	AR	8" WHITE AND ORANGE REFLECTIVE STRIPING STOCK#: 053-2047
103	2	CT, REFLECTIVE STOCK#: 053-4760
104	2	CLEAN AIR, REFLECTIVE STOCK#: 053-4758
105	2	DECAL, 2 OF 9 IN SET STOCK#: 053-2459
106	1	DECAL, "CALTRANS" ORANGE CT# 053-4801

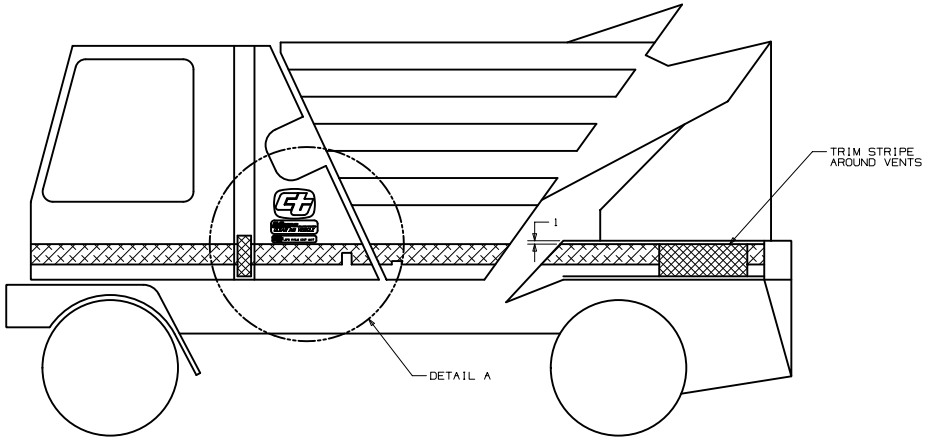

DRIVER SIDE

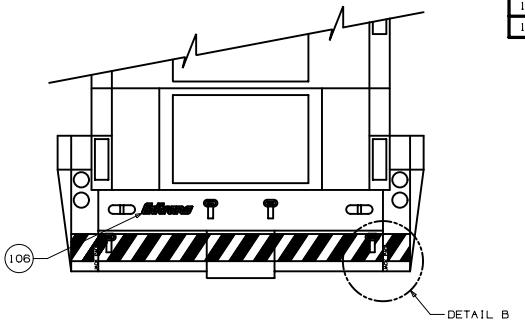

REAR VIEW

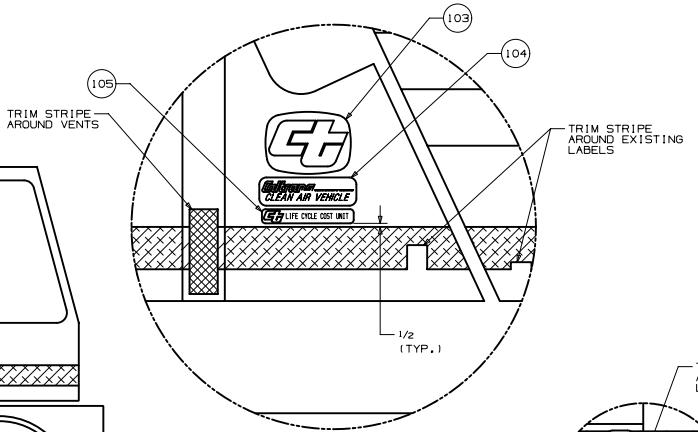

DETAIL A

ITEM 101

ITEM 102

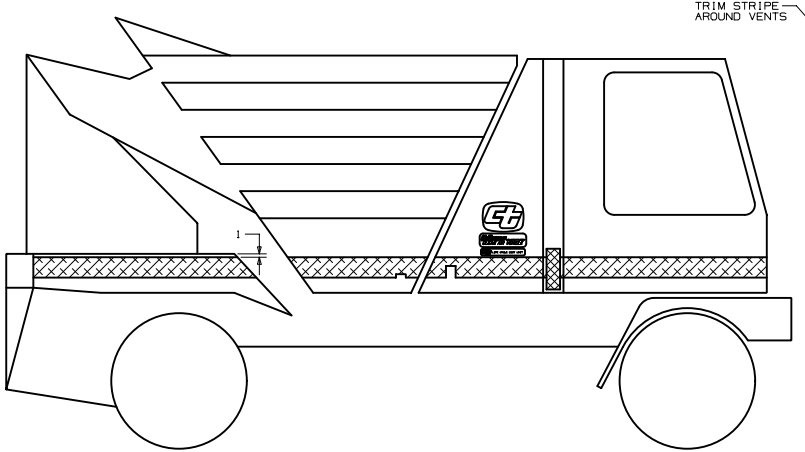

PASSENGER SIDE

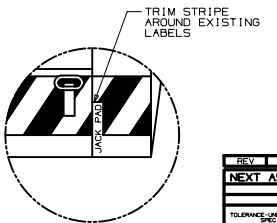

DETAIL B

REV	DESCRIPTION	BY

NEXT ASSEMBLY

STATE OF CALIFORNIA
DEPARTMENT OF TRANSPORTATION

EQUIPMENT SERVICE CENTER

JOHNSTON SWEEPER
DECAL LAYOUT

TOLERANCE UNLESS OTHERWISE SPECIFIED
DECIMAL ±
FRACTIONAL ±
ANGULAR ±
DRILLED HOLES +
REAMED HOLES ±

SCALE NONE	DATE 02/01	I-56808-DE	
DRAWN MATSUO	DESIGNED		
CHECKED	APPROVED	SHEET 1 OF 1 SHEETS	