Dist	COUNTY	ROUTE	POST MILES TOTAL PROJECT	SHEET No.	TOTAL SHEETS
04	Ala	880	19.3	1	25

INDEX OF PLANS

SHEET No.	DESCRIPTION
1	TITLE SHEET AND LOCATION MAP
2	LAYOUT
3	CONSTRUCTION DETAILS
4	TEMPORARY WATER POLLUTION CONTROL PLAN
5 - 8	DRAINAGE PLAN, PROFILES, DETAILS AND QUANTITIES
9	UTILITY PLAN
10	CONSTRUCTION AREA SIGNS
11	SUMMARY OF QUANTITIES
12 - 14	IRRIGATION PLAN AND QUANTITIES
15 - 20	REVISED STANDARD PLANS
	STRUCTURE PLANS
21 - 25	HACIENDA AVENUE PUMPING PLANT

THE STANDARD PLANS LIST APPLICABLE TO THIS CONTRACT IS INCLUDED IN THE NOTICE TO BIDDERS AND SPECIAL PROVISIONS BOOK.

STATE OF CALIFORNIA

DEPARTMENT OF TRANSPORTATION

PROJECT PLANS FOR CONSTRUCTION ON

STATE HIGHWAY

IN ALAMEDA COUNTY
AT SAN LORENZO
AT THE HACIENDA AVENUE PUMPING PLANT

TO BE SUPPLEMENTED BY STANDARD PLANS DATED 2010

LOCATION MAP

LOCATION OF CONSTRUCTION
PM 19.3

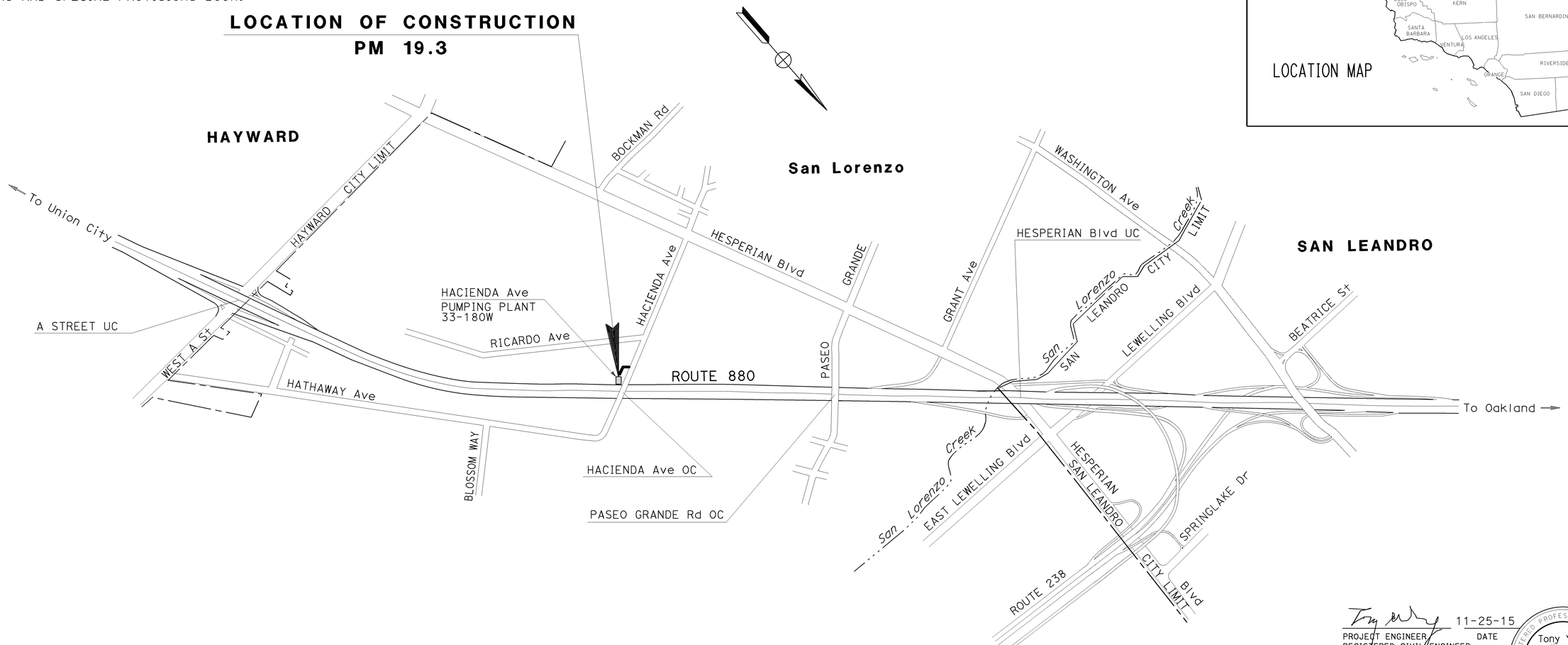

NO SCALE

THE CONTRACTOR SHALL POSSESS THE CLASS (OR CLASSES) OF LICENSE AS SPECIFIED IN THE "NOTICE TO BIDDERS."

PROJECT MANAGER: KAMRAN ABOLFAZLIAN

DESIGN ENGINEER: TONY WONG

Tony Y. F. Wong 11-25-15
PROJECT ENGINEER / REGISTERED CIVIL ENGINEER — DATE

June 27, 2016
PLANS APPROVAL DATE

REGISTERED PROFESSIONAL ENGINEER — Tony Y. F. Wong — No. 40018 — Exp. 12-31-17 — CIVIL — STATE OF CALIFORNIA

THE STATE OF CALIFORNIA OR ITS OFFICERS OR AGENTS SHALL NOT BE RESPONSIBLE FOR THE ACCURACY OR COMPLETENESS OF SCANNED COPIES OF THIS PLAN SHEET.

CONTRACT No.	04-1SS444
PROJECT ID	0412000603

LAST REVISION 06-21-16 — DATE PLOTTED => 22-AUG-2016 — TIME PLOTTED => 10:42

Dist	COUNTY	ROUTE	POST MILES TOTAL PROJECT	SHEET No.	TOTAL SHEETS
04	Ala	880	19.3	2	25

REGISTERED CIVIL ENGINEER 11-25-15 DATE

6-27-16
PLANS APPROVAL DATE

REGISTERED PROFESSIONAL ENGINEER Tony Y. F. Wong No. 40018 Exp. 12-31-17 CIVIL STATE OF CALIFORNIA

THE STATE OF CALIFORNIA OR ITS OFFICERS OR AGENTS SHALL NOT BE RESPONSIBLE FOR THE ACCURACY OR COMPLETENESS OF SCANNED COPIES OF THIS PLAN SHEET.

NOTE:

FOR ACCURATE RIGHT OF WAY DATA, CONTACT RIGHT OF WAY ENGINEERING AT THE DISTRICT OFFICE.

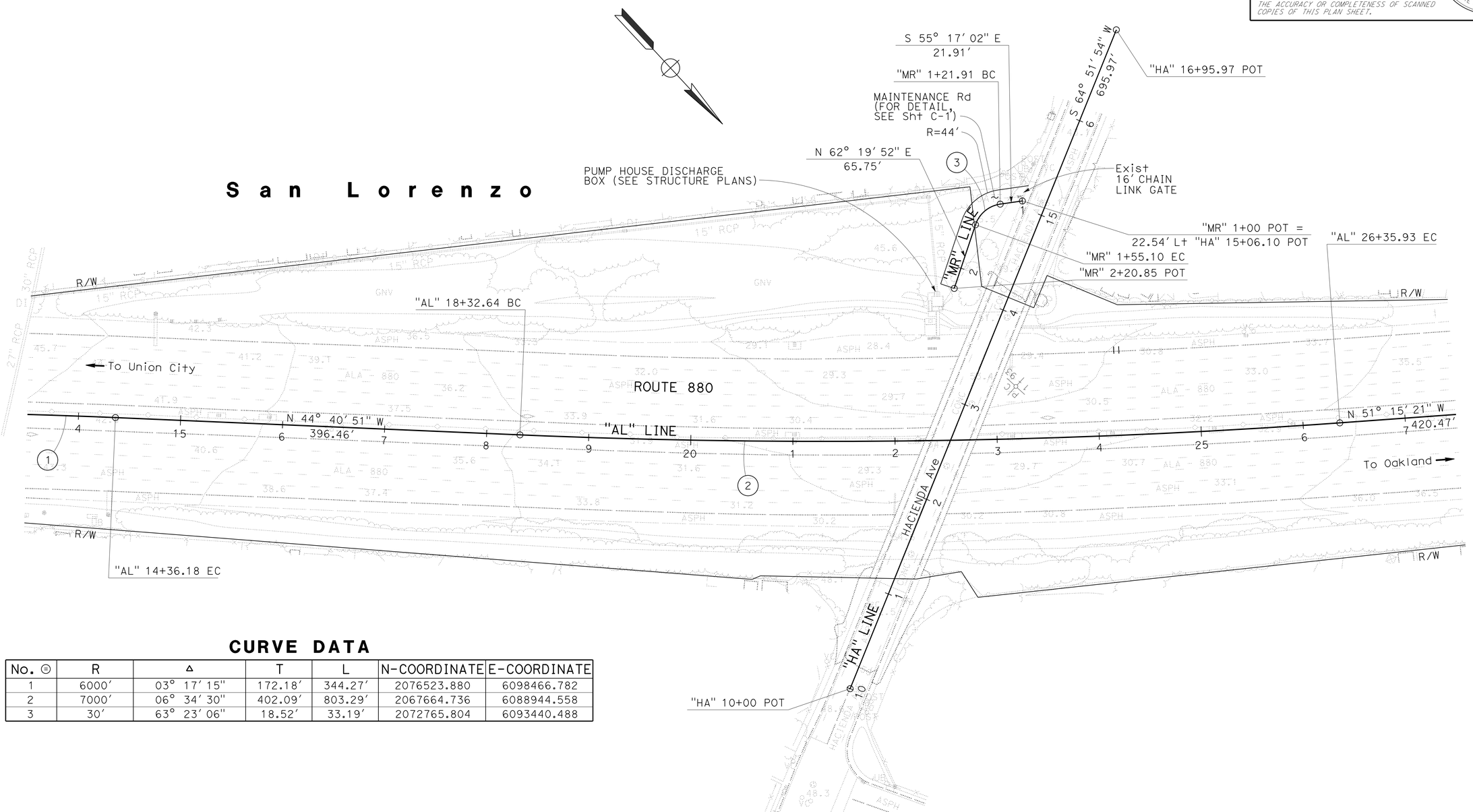

CURVE DATA

No. ⊕	R	Δ	T	L	N-COORDINATE	E-COORDINATE
1	6000′	03° 17′ 15″	172.18′	344.27′	2076523.880	6098466.782
2	7000′	06° 34′ 30″	402.09′	803.29′	2067664.736	6088944.558
3	30′	63° 23′ 06″	18.52′	33.19′	2072765.804	6093440.488

LAYOUT

SCALE: 1″ = 50′

L-1

STATE OF CALIFORNIA - DEPARTMENT OF TRANSPORTATION
Caltrans
DESIGN

FUNCTIONAL SUPERVISOR: MORTEZA AZIMI
CALCULATED-DESIGNED BY: DELFIN TABANCAY
CHECKED BY: TONY WONG
REVISED BY: DT
DATE REVISED: 11-25-14

LAST REVISION 06-21-16 | DATE PLOTTED => 22-AUG-2016 | TIME PLOTTED => 10:52

Dist	COUNTY	ROUTE	POST MILES TOTAL PROJECT	SHEET No.	TOTAL SHEETS
04	Ala	880	19.3	3	25

REGISTERED CIVIL ENGINEER 11-25-15 DATE

6-27-16
PLANS APPROVAL DATE

REGISTERED PROFESSIONAL ENGINEER Tony Y. F. Wong No. 40018 Exp. 12-31-17 CIVIL STATE OF CALIFORNIA

THE STATE OF CALIFORNIA OR ITS OFFICERS OR AGENTS SHALL NOT BE RESPONSIBLE FOR THE ACCURACY OR COMPLETENESS OF SCANNED COPIES OF THIS PLAN SHEET.

NOTE:

1. THE PROFILE OF THE MAINTENANCE ROAD WILL CONFORM WITH THE EXISTING TERRAIN WHERE IT TRAVERSES.

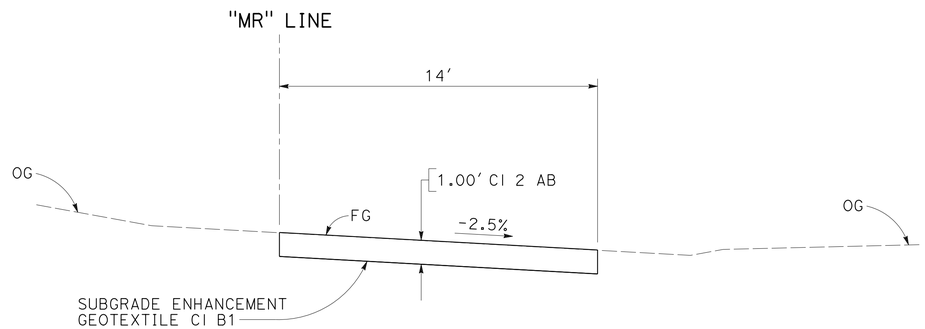

MAINTENANCE ROAD
"MR" 1+00 TO 2+20.85

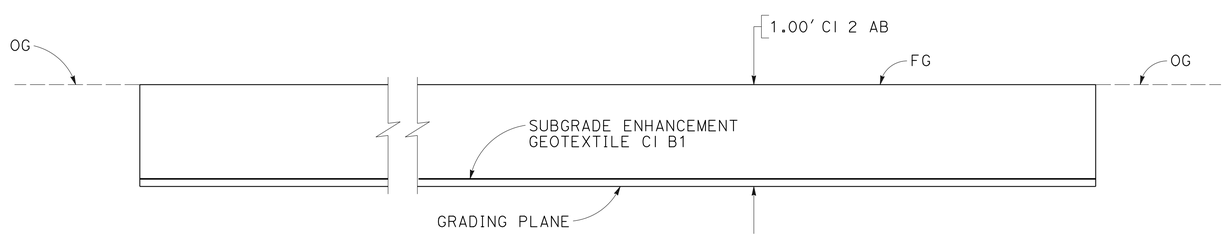

SUBGRADE ENHANCEMENT GEOTEXTILE INSTALLATION DETAIL

CONSTRUCTION DETAILS
NO SCALE

C-1

STATE OF CALIFORNIA - DEPARTMENT OF TRANSPORTATION
Caltrans®
DESIGN

FUNCTIONAL SUPERVISOR: MORTEZA AZIMI
CALCULATED-DESIGNED BY: DELFIN TABANCAY
CHECKED BY: TONY WONG
REVISED BY: DT
DATE REVISED: 2-8-16

LAST REVISION 04-25-16
DATE PLOTTED => 22-AUG-2016
TIME PLOTTED => 10:52

Dist	COUNTY	ROUTE	POST MILES TOTAL PROJECT	SHEET No.	TOTAL SHEETS
04	Ala	880	19.3	4	25

REGISTERED CIVIL ENGINEER 2-12-16 DATE

PLANS APPROVAL DATE 6-27-16

REGISTERED PROFESSIONAL ENGINEER Ganga D. Tripathi No. 78447 Exp. 9-30-17 CIVIL STATE OF CALIFORNIA

THE STATE OF CALIFORNIA OR ITS OFFICERS OR AGENTS SHALL NOT BE RESPONSIBLE FOR THE ACCURACY OR COMPLETENESS OF SCANNED COPIES OF THIS PLAN SHEET.

NOTE:

FOR ACCURATE RIGHT OF WAY DATA, CONTACT RIGHT OF WAY ENGINEERING AT THE DISTRICT OFFICE.

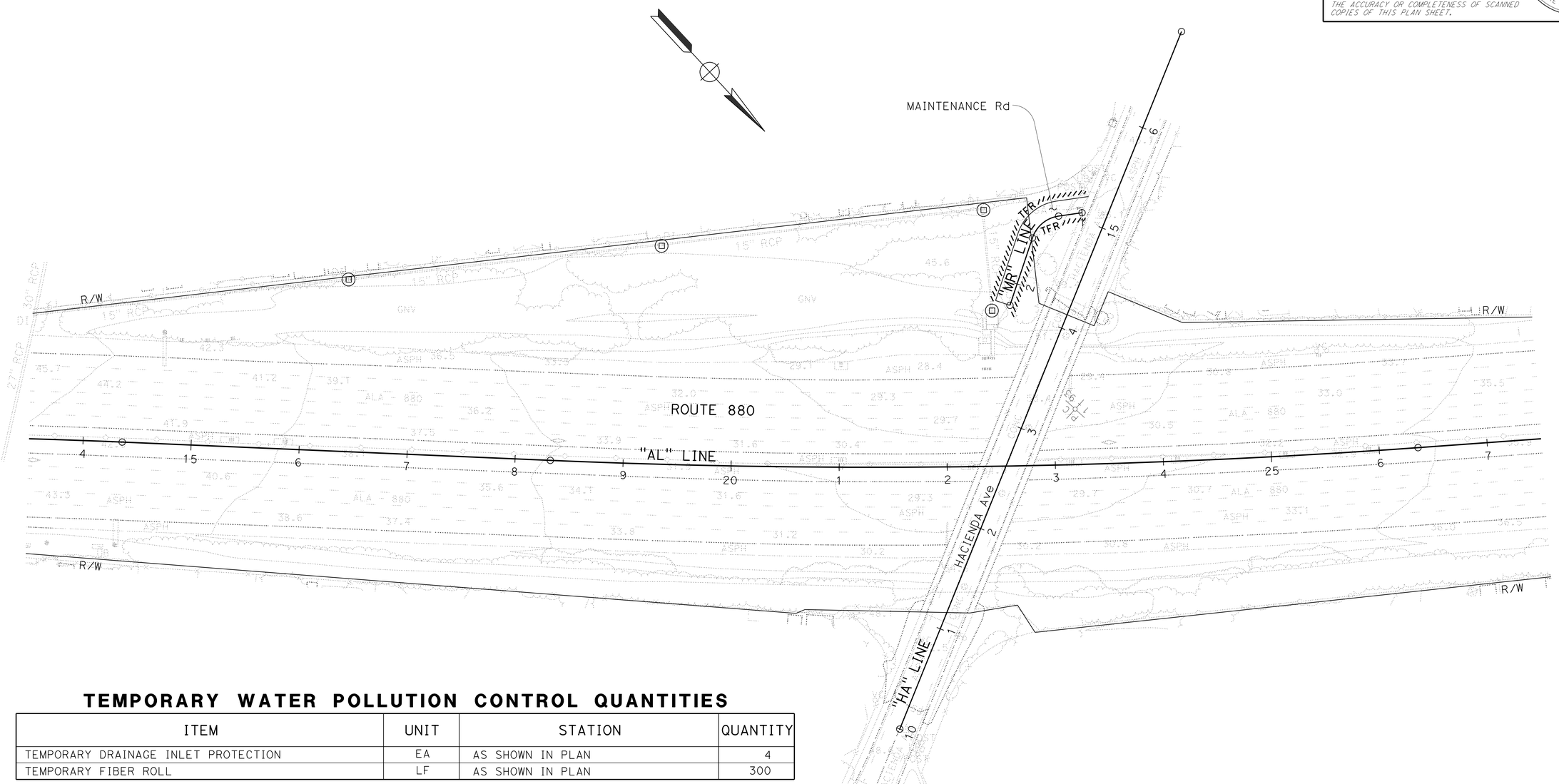

TEMPORARY WATER POLLUTION CONTROL QUANTITIES

ITEM	UNIT	STATION	QUANTITY
TEMPORARY DRAINAGE INLET PROTECTION	EA	AS SHOWN IN PLAN	4
TEMPORARY FIBER ROLL	LF	AS SHOWN IN PLAN	300

TEMPORARY WATER POLLUTION CONTROL PLAN

SCALE: 1" = 50'

APPROVED FOR TEMPORARY WATER POLLUTION CONTROL WORK ONLY

WPC-1

STATE OF CALIFORNIA - DEPARTMENT OF TRANSPORTATION

Caltrans

WATER QUALITY

FUNCTIONAL SUPERVISOR: KAMRAN NAKHJIRI

CALCULATED-DESIGNED BY: GANGA TRIPATHI

CHECKED BY: KAMRAN NAKHJIRI

REVISED BY: GT

DATE REVISED: 2-10-16

LAST REVISION 04-11-16

DATE PLOTTED => 22-AUG-2016

TIME PLOTTED => 10:52

Dist	COUNTY	ROUTE	POST MILES TOTAL PROJECT	SHEET No.	TOTAL SHEETS
04	Ala	880	19.3	5	25

Craig M Tomimatsu 2-22-16
REGISTERED CIVIL ENGINEER DATE

6-27-16
PLANS APPROVAL DATE

REGISTERED PROFESSIONAL ENGINEER
Craig M. Tomimatsu
No. 43072
Exp. 3-31-18
CIVIL
STATE OF CALIFORNIA

THE STATE OF CALIFORNIA OR ITS OFFICERS OR AGENTS SHALL NOT BE RESPONSIBLE FOR THE ACCURACY OR COMPLETENESS OF SCANNED COPIES OF THIS PLAN SHEET.

NOTE:

FOR ACCURATE RIGHT OF WAY DATA, CONTACT RIGHT OF WAY ENGINEERING AT THE DISTRICT OFFICE.

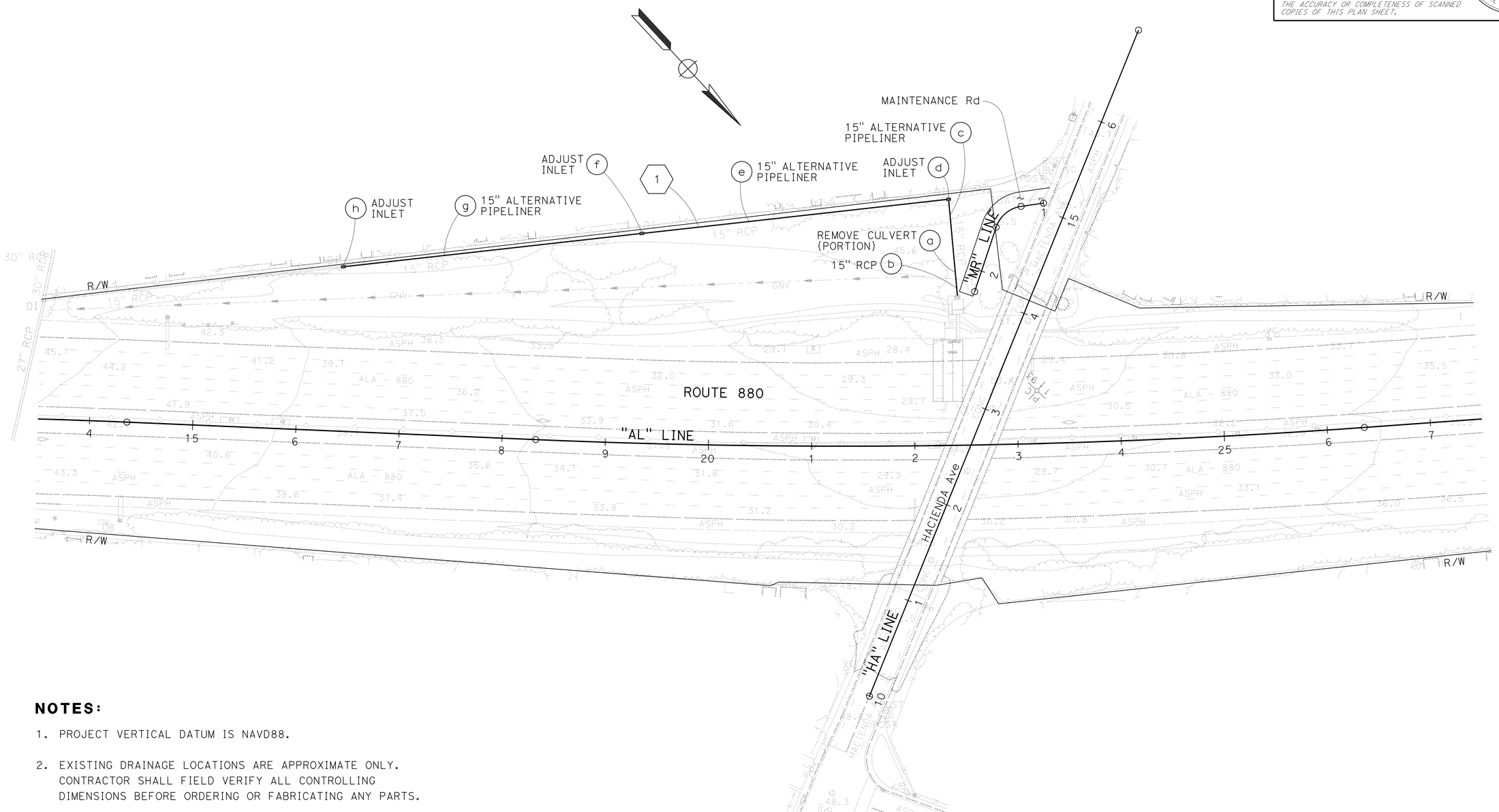

NOTES:

1. PROJECT VERTICAL DATUM IS NAVD88.
2. EXISTING DRAINAGE LOCATIONS ARE APPROXIMATE ONLY. CONTRACTOR SHALL FIELD VERIFY ALL CONTROLLING DIMENSIONS BEFORE ORDERING OR FABRICATING ANY PARTS.

DRAINAGE PLAN

SCALE: 1" = 50'

APPROVED FOR DRAINAGE WORK ONLY

D-1

REVISED BY	CT
DATE REVISED	11-23-15
CRAIG TOMIMATSU	
JOSEPH PETERSON	
CALCULATED-DESIGNED BY	
CHECKED BY	
FUNCTIONAL SUPERVISOR	JOSEPH PETERSON

STATE OF CALIFORNIA - DEPARTMENT OF TRANSPORTATION
Caltrans
HYDRAULICS

LAST REVISION 04-11-16 | DATE PLOTTED => 22-AUG-2016 | TIME PLOTTED => 10:52

Dist	COUNTY	ROUTE	POST MILES TOTAL PROJECT	SHEET No.	TOTAL SHEETS
04	Ala	880	19.3	6	25

Craig M Tomimatsu 2-22-16
REGISTERED CIVIL ENGINEER DATE

6-27-16
PLANS APPROVAL DATE

REGISTERED PROFESSIONAL ENGINEER Craig M. Tomimatsu No. 43072 Exp. 3-31-18 CIVIL STATE OF CALIFORNIA

THE STATE OF CALIFORNIA OR ITS OFFICERS OR AGENTS SHALL NOT BE RESPONSIBLE FOR THE ACCURACY OR COMPLETENESS OF SCANNED COPIES OF THIS PLAN SHEET.

ABBREVIATION:

TOC TOP OF COVER

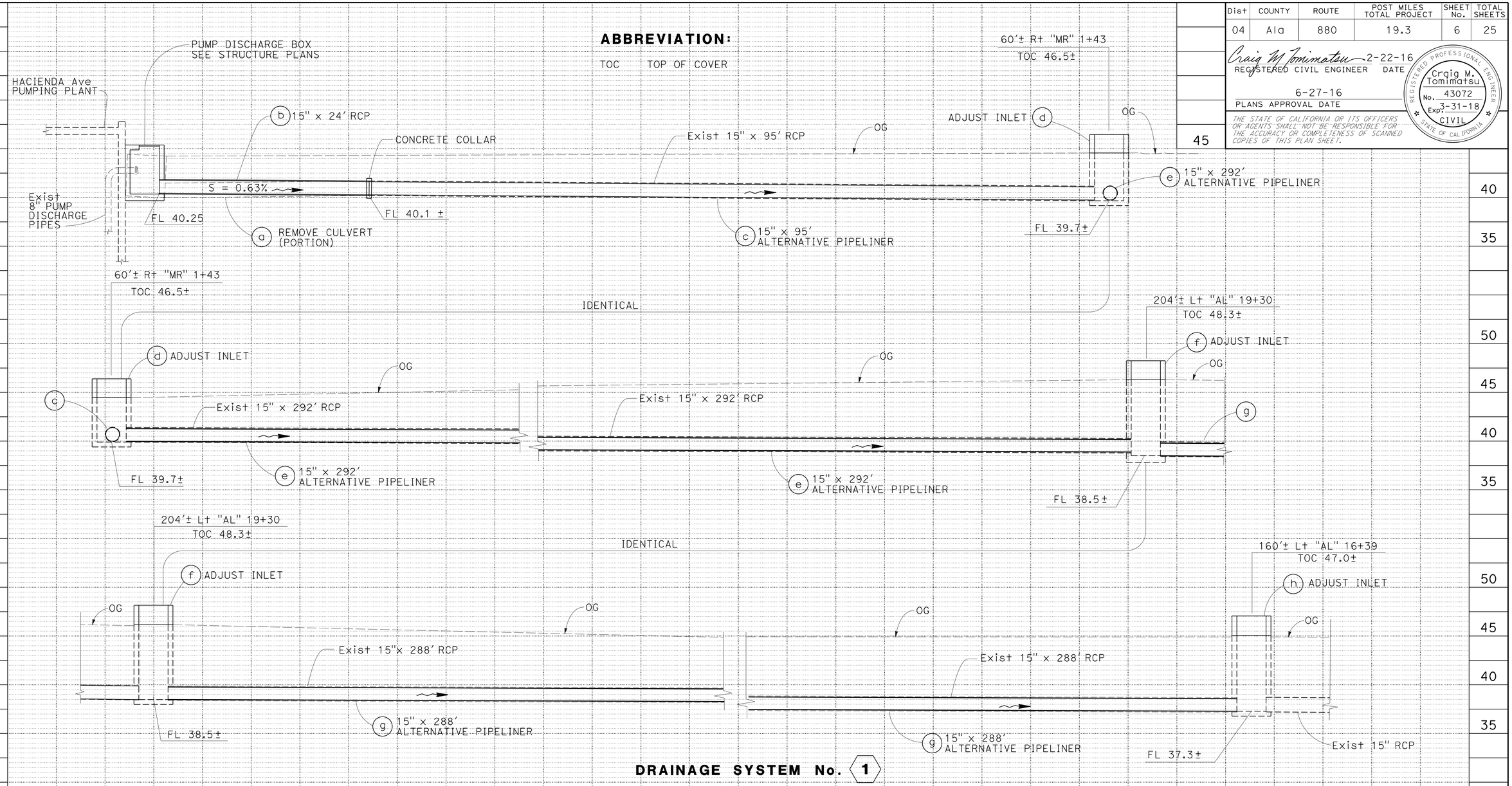

DRAINAGE SYSTEM No. 1

DRAINAGE PROFILES

SCALE: Horiz 1" = 5'
Vert 1" = 5'

DP-1

STATE OF CALIFORNIA - DEPARTMENT OF TRANSPORTATION
Caltrans
HYDRAULICS

FUNCTIONAL SUPERVISOR: JOSEPH PETERSON
CALCULATED-DESIGNED BY: CRAIG TOMIMATSU
CHECKED BY: JOSEPH PETERSON
REVISED BY: CT
DATE REVISED: 2-22-16

LAST REVISION 04-11-16
DATE PLOTTED => 22-AUG-2016
TIME PLOTTED => 10:52

Dist	COUNTY	ROUTE	POST MILES TOTAL PROJECT	SHEET No.	TOTAL SHEETS
04	Ala	880	19.3	7	25

Craig M Tomimatsu 2-22-16
REGISTERED CIVIL ENGINEER DATE

6-27-16
PLANS APPROVAL DATE

REGISTERED PROFESSIONAL ENGINEER Craig M. Tomimatsu No. 43072 Exp. 3-31-18 CIVIL STATE OF CALIFORNIA

THE STATE OF CALIFORNIA OR ITS OFFICERS OR AGENTS SHALL NOT BE RESPONSIBLE FOR THE ACCURACY OR COMPLETENESS OF SCANNED COPIES OF THIS PLAN SHEET.

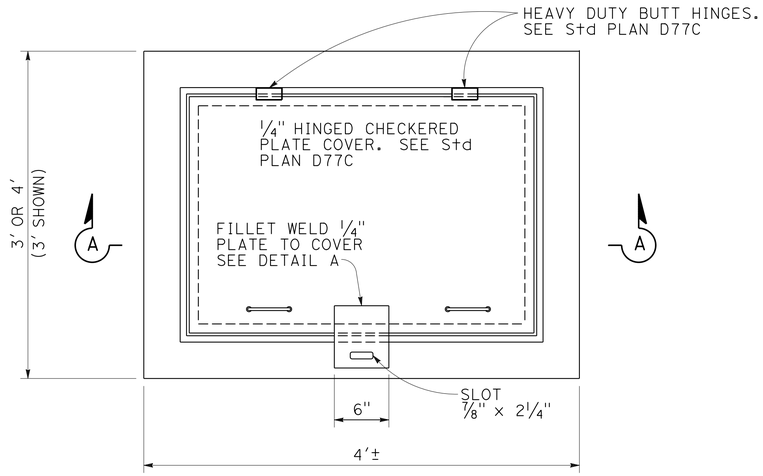

PLAN VIEW

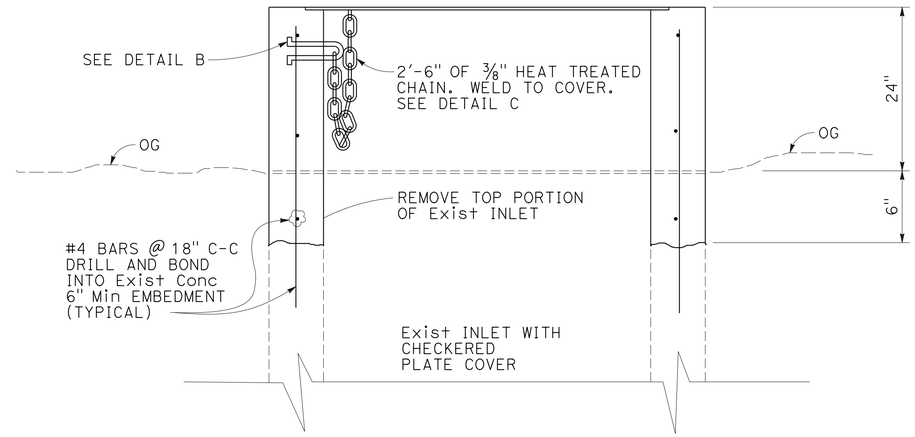

SECTION A-A

ADJUST INLET

1 d, f, h

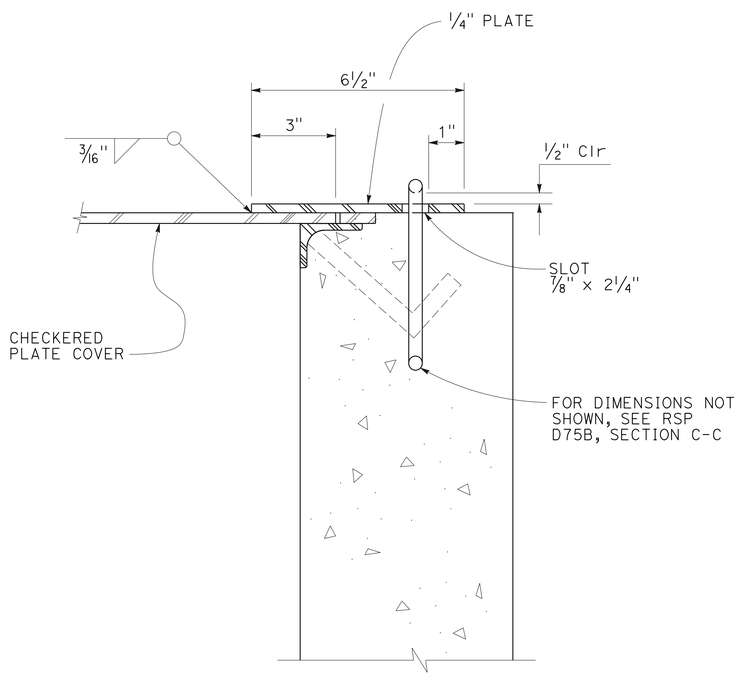

DETAIL A

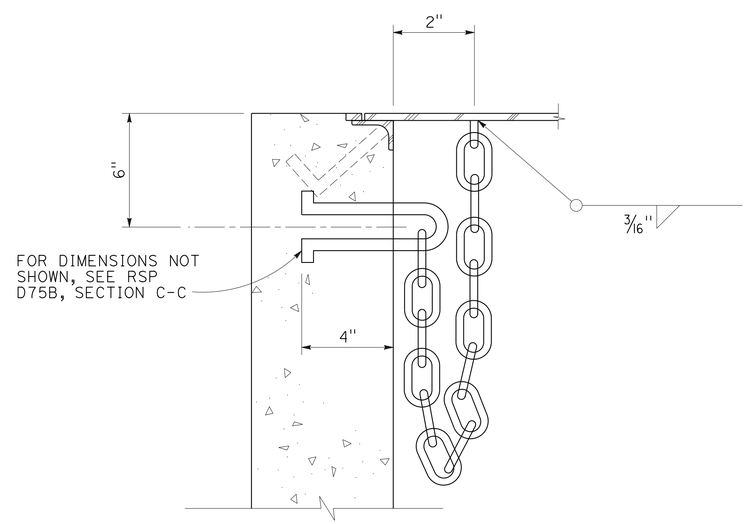

DETAIL B

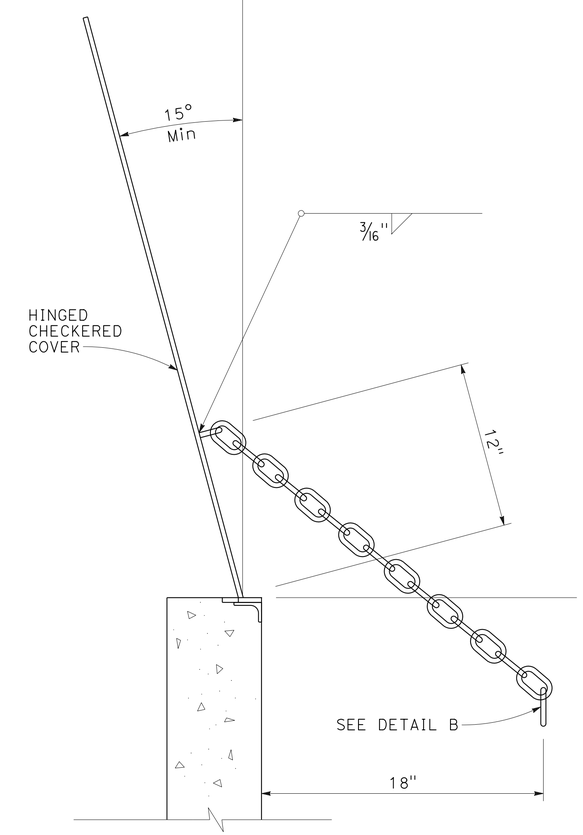

DETAIL C

DRAINAGE DETAILS

NO SCALE

DD-1

STATE OF CALIFORNIA - DEPARTMENT OF TRANSPORTATION
Caltrans®
HYDRAULICS

CALCULATED-DESIGNED BY: CRAIG TOMIMATSU
CHECKED BY: JOSEPH PETERSON
FUNCTIONAL SUPERVISOR: JOSEPH PETERSON
REVISED BY: CT
DATE REVISED: 11-23-15

LAST REVISION 04-11-16
DATE PLOTTED => 22-AUG-2016
TIME PLOTTED => 10:52

Dist	COUNTY	ROUTE	POST MILES TOTAL PROJECT	SHEET No.	TOTAL SHEETS
04	Ala	880	19.3	8	25

Craig M Tomimatsu 2-22-16
REGISTERED CIVIL ENGINEER DATE

6-27-16
PLANS APPROVAL DATE

REGISTERED PROFESSIONAL ENGINEER Craig M. Tomimatsu No. 43072 Exp. 3-31-18 CIVIL STATE OF CALIFORNIA

THE STATE OF CALIFORNIA OR ITS OFFICERS OR AGENTS SHALL NOT BE RESPONSIBLE FOR THE ACCURACY OR COMPLETENESS OF SCANNED COPIES OF THIS PLAN SHEET.

NOTE:

1. ALLOWABLE ALTERNATIVE PIPELINERS ARE CURED-IN-PLACE PIPELINER OR MACHINE SPIRAL WOUND PVC PIPELINER, EXPANDABLE DIAMETER.

DRAINAGE QUANTITIES

DRAINAGE SHEET No.	DRAINAGE SYSTEM No. ⬡	DRAINAGE UNIT ○	REMOVE CULVERT	ADJUST INLET	FRAMES, GRATES, COVERS (N) HINGED CHECKERED PLATE COVER	MISCELLANEOUS IRON AND STEEL	15" RCP	15" ALTERNATIVE PIPELINER	DESCRIPTION	STATION	DRAINAGE SYSTEM No. ⬡	DRAINAGE UNIT ○
			LF	EA		LB	LF					
D-1	1	a	24						REMOVE 24' OF 15" RCP	R† "MR" 2+10	1	a
		b					24		15" RCP	R† "MR" 2+10		b
		c						95	ALTERNATIVE PIPELINER			c
		d		1	1	120			ADJUST INLET WITH HINGED COVER	60'± R† "MR" 1+43		d
		e						292	ALTERNATIVE PIPELINER	60'± R† "MR" 1+43 TO 204' L† "AL" 19+30		e
		f		1	1	180			ADJUST INLET WITH HINGED COVER	204'± L† "AL" 19+30		f
		g						288	ALTERNATIVE PIPELINER	204'± L† "AL" 19+30 TO 160' L† "AL" 16+39		g
		h		1	1	180			ADJUST INLET WITH HINGED COVER	160'± L† "AL" 16+39		h
SHEET TOTAL			24	3	3	480	24	675	SHEET TOTAL			

REVISED BY CT
DATE REVISED 4-6-15

CRAIG TOMIMATSU
JOSEPH PETERSON

CALCULATED-DESIGNED BY
CHECKED BY

FUNCTIONAL SUPERVISOR
JOSEPH PETERSON

STATE OF CALIFORNIA - DEPARTMENT OF TRANSPORTATION
Caltrans
HYDRAULICS

LAST REVISION 04-11-16
DATE PLOTTED => 22-AUG-2016
TIME PLOTTED => 10:52

DRAINAGE QUANTITIES DQ-1

Dist	COUNTY	ROUTE	POST MILES TOTAL PROJECT	SHEET No.	TOTAL SHEETS
04	Ala	880	19.3	9	25

REGISTERED CIVIL ENGINEER 11-25-15 DATE

6-27-16
PLANS APPROVAL DATE

REGISTERED PROFESSIONAL ENGINEER Tony Y. F. Wong No. 40018 Exp. 12-31-17 CIVIL STATE OF CALIFORNIA

THE STATE OF CALIFORNIA OR ITS OFFICERS OR AGENTS SHALL NOT BE RESPONSIBLE FOR THE ACCURACY OR COMPLETENESS OF SCANNED COPIES OF THIS PLAN SHEET.

NOTE:

FOR ACCURATE RIGHT OF WAY DATA, CONTACT RIGHT OF WAY ENGINEERING AT THE DISTRICT OFFICE.

LEGEND:

⊗ POTHOLE LOCATION NUMBER

ABBREVIATION:

PH POTHOLE

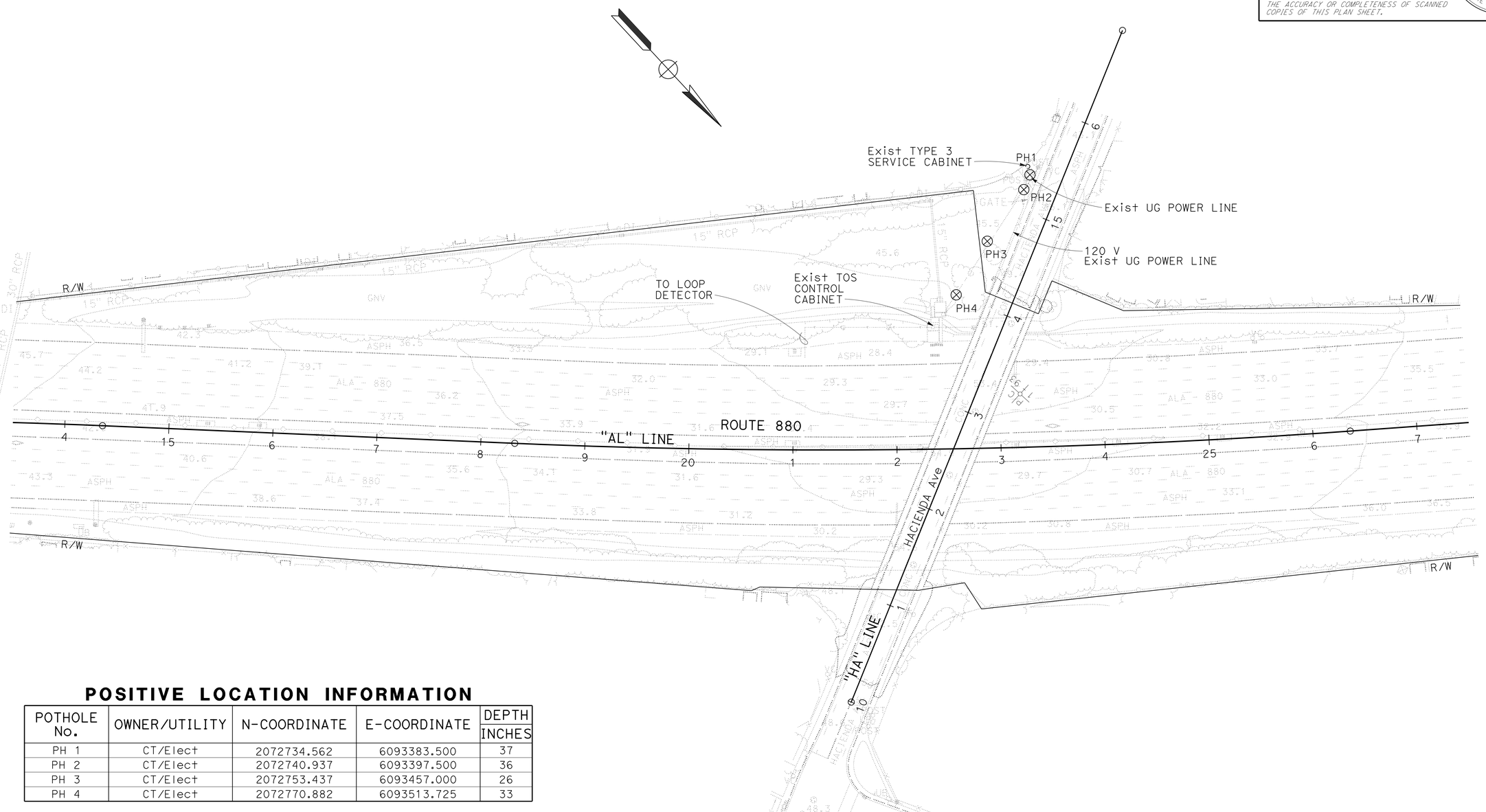

POSITIVE LOCATION INFORMATION

POTHOLE No.	OWNER/UTILITY	N-COORDINATE	E-COORDINATE	DEPTH INCHES
PH 1	CT/Elect	2072734.562	6093383.500	37
PH 2	CT/Elect	2072740.937	6093397.500	36
PH 3	CT/Elect	2072753.437	6093457.000	26
PH 4	CT/Elect	2072770.882	6093513.725	33

UTILITY PLAN

SCALE: 1" = 50'

THIS PLAN TO BE USED FOR UTILITY INFORMATION ONLY

U-1

STATE OF CALIFORNIA - DEPARTMENT OF TRANSPORTATION

Caltrans

DESIGN

FUNCTIONAL SUPERVISOR: MORTEZA AZIMI

CALCULATED-DESIGNED BY: DELFIN TABANCAY

CHECKED BY: TONY WONG

REVISED BY: DT

DATE REVISED: 11-24-15

LAST REVISION 04-11-16

DATE PLOTTED => 22-AUG-2016

TIME PLOTTED => 10:52

Dist	COUNTY	ROUTE	POST MILES TOTAL PROJECT	SHEET No.	TOTAL SHEETS
04	Ala	880	19.3	10	25

Parwin W. Sarwary 11-25-15
REGISTERED CIVIL ENGINEER DATE

6-27-16
PLANS APPROVAL DATE

REGISTERED PROFESSIONAL ENGINEER Parwin W. Sarwary No. 79545 Exp. 9-30-16 CIVIL STATE OF CALIFORNIA

THE STATE OF CALIFORNIA OR ITS OFFICERS OR AGENTS SHALL NOT BE RESPONSIBLE FOR THE ACCURACY OR COMPLETENESS OF SCANNED COPIES OF THIS PLAN SHEET.

STATIONARY MOUNTED CONSTRUCTION AREA SIGNS

SIGN No.	SIGN CODE	PANEL SIZE	SIGN MESSAGE	NUMBER OF POSTS AND SIZE	No. OF SIGN
A	W20-1	48" x 48"	ROAD WORK AHEAD	2 - 4" x 6"	2
B	G20-2	36" x 18"	END ROAD WORK	1 - 4" x 4"	2

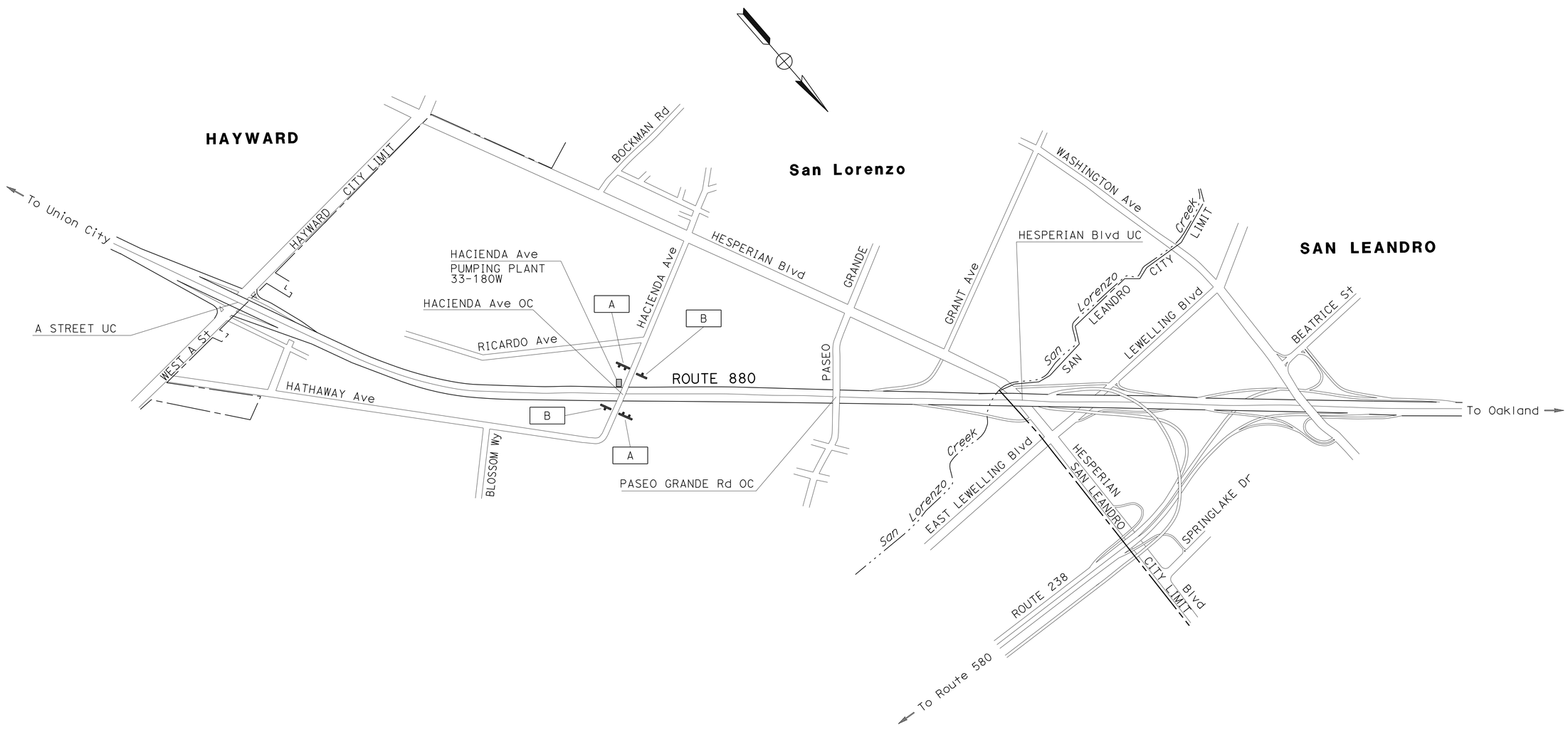

CONSTRUCTION AREA SIGNS

NO SCALE

APPROVED FOR CONSTRUCTION AREA SIGN WORK ONLY

CS-1

STATE OF CALIFORNIA - DEPARTMENT OF TRANSPORTATION
Caltrans®
TRAFFIC

FUNCTIONAL SUPERVISOR: LOURDES DAVID
CALCULATED-DESIGNED BY: PARWIN SARWARY
CHECKED BY: LOURDES DAVID
REVISED BY: PS
DATE REVISED: 4-18-16

LAST REVISION 04-11-16 | DATE PLOTTED => 22-AUG-2016 | TIME PLOTTED => 10:52

BORDER LAST REVISED 7/2/2010 | USERNAME => s126849 | DGN FILE => 04120006031a001.dgn | RELATIVE BORDER SCALE IS IN INCHES 0 1 2 3 | UNIT 0725 | PROJECT NUMBER & PHASE 04120006031

Dist	COUNTY	ROUTE	POST MILES TOTAL PROJECT	SHEET No.	TOTAL SHEETS
04	Ala	880	19.3	11	25

REGISTERED CIVIL ENGINEER 11-25-15 DATE

6-27-16
PLANS APPROVAL DATE

REGISTERED PROFESSIONAL ENGINEER
Tony Y. F. Wong
No. 40018
Exp. 12-31-17
CIVIL
STATE OF CALIFORNIA

THE STATE OF CALIFORNIA OR ITS OFFICERS OR AGENTS SHALL NOT BE RESPONSIBLE FOR THE ACCURACY OR COMPLETENESS OF SCANNED COPIES OF THIS PLAN SHEET.

ROADWAY SUMMARY

STATION/LOCATION	CLASS 2 AGGREGATE BASE	SUBGRADE ENHANCEMENT GEOTEXTILE CLASS B1
	CY	SQYD
"MR" 1+00 TO 2+20.85	80	190
TOTAL	80	190

EARTHWORK SUMMARY

STATION/LOCATION	ROADWAY EXCAVATION
	CY
"MR" 1+00 TO 2+20.85	80
TOTAL	80

SUMMARY OF QUANTITIES

Q-1

STATE OF CALIFORNIA - DEPARTMENT OF TRANSPORTATION
Caltrans
DESIGN

FUNCTIONAL SUPERVISOR: MORTEZA AZIMI
CALCULATED-DESIGNED BY: DELFIN TABANCAY
CHECKED BY: SHANKAR KUTTY
REVISED BY: DT
DATE REVISED: 11-24-15

LAST REVISION 04-11-16
DATE PLOTTED => 22-AUG-2016
TIME PLOTTED => 10:52

Dist	COUNTY	ROUTE	POST MILES TOTAL PROJECT	SHEET No.	TOTAL SHEETS
04	Ala	880	19.3	12	25

LICENSED LANDSCAPE ARCHITECT

6-27-16

PLANS APPROVAL DATE

THE STATE OF CALIFORNIA OR ITS OFFICERS OR AGENTS SHALL NOT BE RESPONSIBLE FOR THE ACCURACY OR COMPLETENESS OF SCANNED COPIES OF THIS PLAN SHEET.

LICENSED LANDSCAPE ARCHITECT — DENNIS CALLOWAY No. 3809 — Signature 11-30-17 — Renewal Date 11-18-15 — Date — STATE OF CALIFORNIA

NOTE:

FOR ACCURATE RIGHT OF WAY DATA, CONTACT RIGHT OF WAY ENGINEERING AT THE DISTRICT OFFICE.

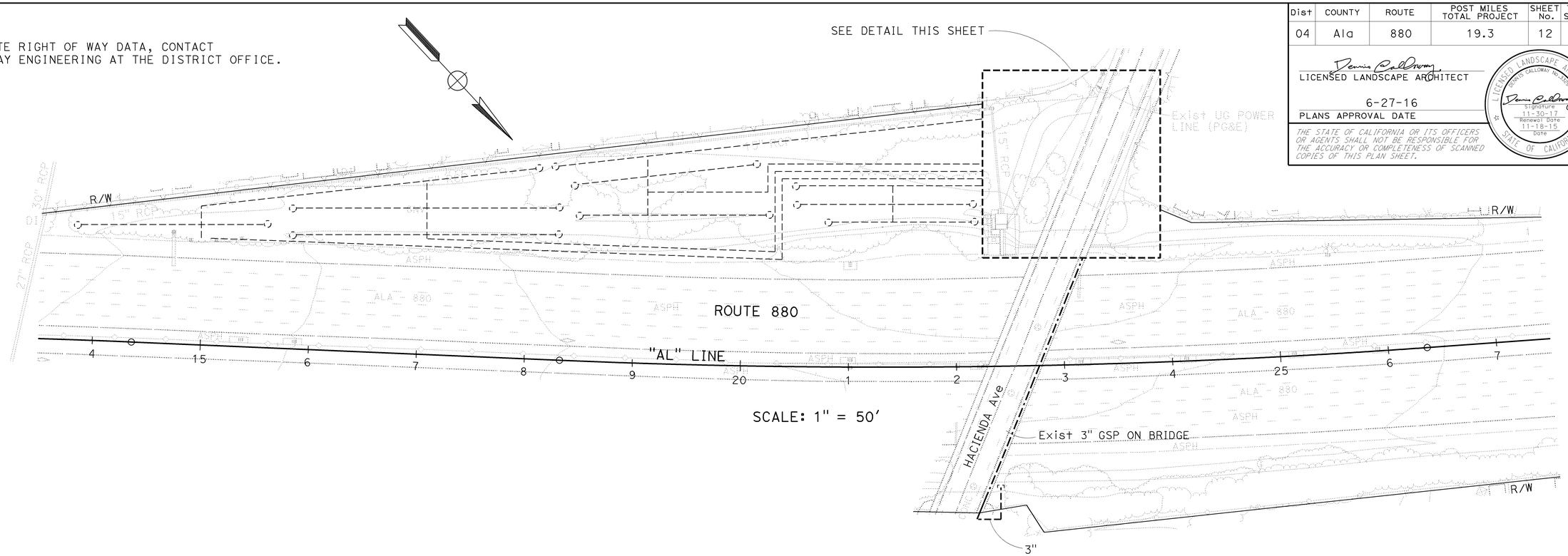

SCALE: 1" = 50'

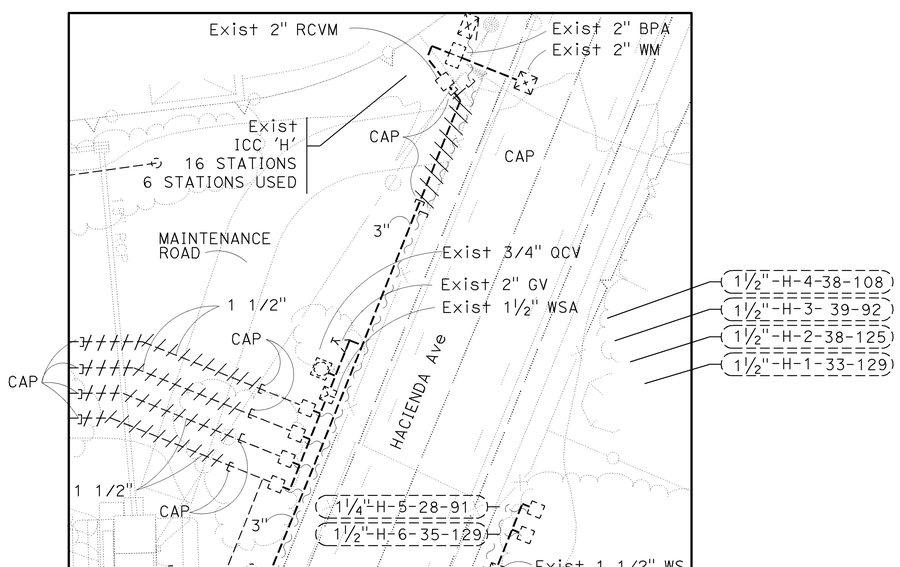

IRRIGATION REMOVAL PLAN

SCALE: 1" = 20'

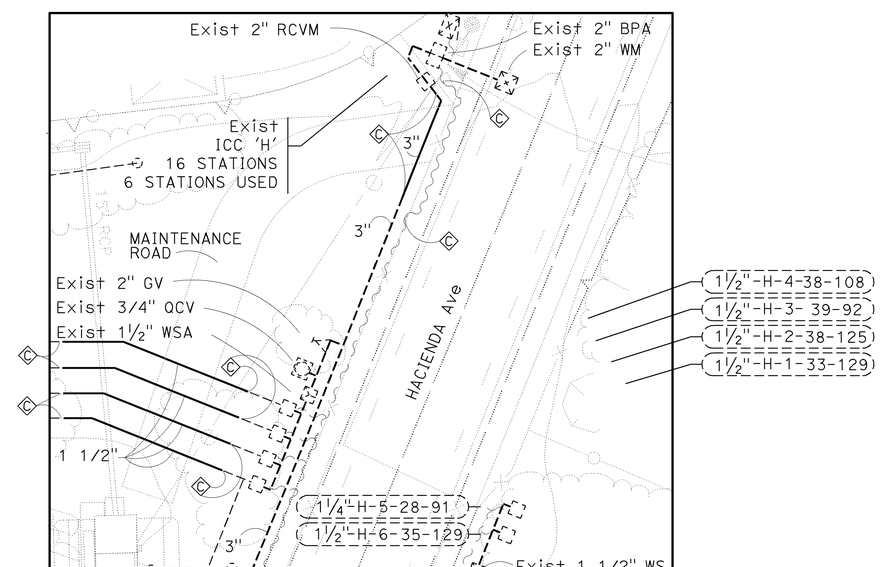

IRRIGATION PLAN

SCALE: 1" = 20'

APPROVED FOR IRRIGATION WORK ONLY

IRRIGATION PLAN

SCALE: AS SHOWN

IP-1

STATE OF CALIFORNIA - DEPARTMENT OF TRANSPORTATION

Caltrans® LANDSCAPE ARCHITECTURE

SENIOR LANDSCAPE ARCHITECT: LYDIA MAC

CALCULATED-DESIGNED BY: DENNIS CALLOWAY

CHECKED BY: LYDIA MAC

REVISED BY: DC — DATE REVISED: 5-12-15 — DC — 3-21-16

LAST REVISION 04-11-16 — DATE PLOTTED => 22-AUG-2016 — TIME PLOTTED => 10:43

Dist	COUNTY	ROUTE	POST MILES TOTAL PROJECT	SHEET No.	TOTAL SHEETS
04	Ala	880	19.3	13	25

LICENSED LANDSCAPE ARCHITECT

6-27-16
PLANS APPROVAL DATE

LICENSED LANDSCAPE ARCHITECT
DENNIS CALLOWAY No. 3309
Signature
11-30-17
Renewal Date
11-18-15
Date
STATE OF CALIFORNIA

THE STATE OF CALIFORNIA OR ITS OFFICERS OR AGENTS SHALL NOT BE RESPONSIBLE FOR THE ACCURACY OR COMPLETENESS OF SCANNED COPIES OF THIS PLAN SHEET.

SUBTOTALS PER VALVE ON LATERAL SUPPLY SIDE OF CONTROL VALVE

DESCRIPTION		UNIT	VALVE OR ASSEMBLY NUMBER				SUBTOTALS	UNIT	DESCRIPTION	
			H-1	H-2	H-3	H-4				
PLASTIC PIPE (SUPPLY LINE) (SCHEDULE 40)	1 1/2 INCH	LF	70	70	70	70	280	LF	1 1/2 INCH	(SCHEDULE 40) PLASTIC PIPE (SUPPLY LINE)
GSP										GSP
DIP										DIP
SPRINKLER ASSEMBLY TYPE										SPRINKLER ASSEMBLY TYPE

IRRIGATION QUANTITIES
IQ-1

STATE OF CALIFORNIA - DEPARTMENT OF TRANSPORTATION
Caltrans® LANDSCAPE ARCHITECTURE

SENIOR LANDSCAPE ARCHITECT: LYDIA MAC
CALCULATED-DESIGNED BY: DENNIS CALLOWAY
CHECKED BY: LYDIA MAC
REVISED BY: DC
DATE REVISED: 5-12-15
DC: 3-21-16

LAST REVISION 04-11-16
DATE PLOTTED => 22-AUG-2016
TIME PLOTTED => 10:44

Dist	COUNTY	ROUTE	POST MILES TOTAL PROJECT	SHEET No.	TOTAL SHEETS
04	Ala	880	19.3	14	25

LICENSED LANDSCAPE ARCHITECT

6-27-16
PLANS APPROVAL DATE

LICENSED LANDSCAPE ARCHITECT — DENNIS CALLOWAY — Signature — 11-30-17 Renewal Date — 11-18-15 Date — STATE OF CALIFORNIA

THE STATE OF CALIFORNIA OR ITS OFFICERS OR AGENTS SHALL NOT BE RESPONSIBLE FOR THE ACCURACY OR COMPLETENESS OF SCANNED COPIES OF THIS PLAN SHEET.

SUBTOTALS PER PLAN SHEET ON MAIN SUPPLY SIDE OF CONTROL VALVE

DESCRIPTION			UNIT	SHEET NUMBER IP-1	SUBTOTALS
BPA	1 INCH				
BPA	ENCLOSURE (N)				
BOOSTER PUMP					
IRRIGATION CONTROLLER	16 STATION				
IRRIGATION CONTROLLER	BATTERY OPERATED 2 STATIONS				
IRRIGATION CONTROLLER	CEC	SINGLE			
IRRIGATION CONTROLLER	CEC	DOUBLE			
VALVES AND ASSEMBLIES	WSA	1½ INCH			
VALVES AND ASSEMBLIES	WSA	2 INCH			
VALVES AND ASSEMBLIES	RCV	1 INCH			
VALVES AND ASSEMBLIES	RCV	1¼ INCH			
VALVES AND ASSEMBLIES	RCV	1½ INCH			
VALVES AND ASSEMBLIES	RCV	2 INCH			
VALVES AND ASSEMBLIES	GV	1½ INCH			
VALVES AND ASSEMBLIES	GV	2 INCH			
VALVES AND ASSEMBLIES	QCV	¾ INCH			
VALVES AND ASSEMBLIES	BV	1½ INCH			
VALVES AND ASSEMBLIES	BV	2 INCH			
VALVES AND ASSEMBLIES	FS	1½ INCH			
CONDUIT	WSP	8 INCH			
PLASTIC PIPE (SUPPLY LINE)	CL 315 (SCHEDULE 40)	3 INCH	LF	40	
CP	DIP	GSP			

TOTAL QUANTITIES

TOTALS	UNIT	DESCRIPTION		
		1 INCH		BPA
		ENCLOSURE (N)		BPA
		BOOSTER PUMP		
		16 STATION		IRRIGATION CONTROLLER
		BATTERY OPERATED 2 STATIONS		IRRIGATION CONTROLLER
		SINGLE	CEC	IRRIGATION CONTROLLER
		DOUBLE	CEC	IRRIGATION CONTROLLER
		1½ INCH	WSA	VALVES AND ASSEMBLIES
		2 INCH	WSA	VALVES AND ASSEMBLIES
		1 INCH	RCV	VALVES AND ASSEMBLIES
		1¼ INCH	RCV	VALVES AND ASSEMBLIES
		1½ INCH	RCV	VALVES AND ASSEMBLIES
		2 INCH	RCV	VALVES AND ASSEMBLIES
		1½ INCH	GV	VALVES AND ASSEMBLIES
		2 INCH	GV	VALVES AND ASSEMBLIES
		¾ INCH	QCV	VALVES AND ASSEMBLIES
		1½ INCH	BV	VALVES AND ASSEMBLIES
		2 INCH	BV	VALVES AND ASSEMBLIES
		1½ INCH	FS	VALVES AND ASSEMBLIES
		8 INCH	WSP	CONDUIT
280	LF	1½ INCH	CL 315 (SCHEDULE 40)	PLASTIC PIPE (SUPPLY LINE)
40	LF	3 INCH	CL 315 (SCHEDULE 40)	PLASTIC PIPE (SUPPLY LINE)
			GSP	SPRINKLER ASSEMBLY TYPE
			DIP	SPRINKLER ASSEMBLY TYPE
			CP	SPRINKLER ASSEMBLY TYPE

(N) - NOT A SEPARATE PAY ITEM

IRRIGATION QUANTITIES
IQ-2

	DATE	BY
DC	3-21-16	
DC	5-12-15	
REVISED BY / DATE REVISED		
DENNIS CALLOWAY	LYDIA MAC	
CALCULATED-DESIGNED BY / CHECKED BY		
SENIOR LANDSCAPE ARCHITECT	LYDIA MAC	

STATE OF CALIFORNIA - DEPARTMENT OF TRANSPORTATION
Caltrans® LANDSCAPE ARCHITECTURE

LAST REVISION 04-11-16 | DATE PLOTTED => 22-AUG-2016 | TIME PLOTTED => 10:44

M

Maint	MAINTENANCE
Max	MAXIMUM
MB	METAL BEAM
MBB	METAL BEAM BARRIER
MBGR	METAL BEAM GUARD RAILING
Med	MEDIAN
MGS	MIDWEST GUARDRAIL SYSTEM
MH	MANHOLE
Min	MINIMUM
Misc	MISCELLANEOUS
Misc I & S	MISCELLANEOUS IRON AND STEEL
Mkr	MARKER
Mod	MODIFIED,
	MODIFY
Mon	MONUMENT
MP	METAL PLATE
MPGR	METAL PLATE GUARD RAILING
MR	MOVEMENT RATING
MSE	MECHANICALLY STABILIZED EMBANKMENT
Mt	MOUNTAIN, MOUNT
Mtl	MATERIAL
MVP	MAINTENANCE VEHICLE PULLOUT

N

N	NORTH
NB	NORTHBOUND
No.	NUMBER (MUST HAVE PERIOD)
Nos.	NUMBERS (MUST HAVE PERIOD)
NPS	NOMINAL PIPE SIZE
NS	NEAR SIDE
NSP	NEW STANDARD PLAN
NTS	NOT TO SCALE

O

Oblr	OBLITERATE
OC	OVERCROSSING
OD	OUTSIDE DIAMETER
OF	OUTSIDE FACE
OG	ORIGINAL GROUND
OGAC	OPEN GRADED ASPHALT CONCRETE
OGFC	OPEN GRADED FRICTION COURSE
OH	OVERHEAD
OHWM	ORDINARY HIGH WATER MARK
O-O	OUT TO OUT
Opp	OPPOSITE
OSD	OVERSIDE DRAIN

P

P	PAGE
PAP	PERFORATED ALUMINUM PIPE
PB	PULL BOX
PC	POINT OF CURVATURE,
	PRECAST
PCC	POINT OF COMPOUND CURVE,
	PORTLAND CEMENT CONCRETE
PCMS	PORTABLE CHANGEABLE MESSAGE SIGN
PCP	PERFORATED CONCRETE PIPE,
	PRESTRESSED CONCRETE PIPE
PCVC	POINT OF COMPOUND VERTICAL CURVE
PEC	PERMIT TO ENTER AND CONSTRUCT
Ped	PEDESTRIAN
Ped OC	PEDESTRIAN OVERCROSSING
Ped UC	PEDESTRIAN UNDERCROSSING
Perm Mtl	PERMEABLE MATERIAL

P continued

PG	PROFILE GRADE
PI	POINT OF INTERSECTION
PJP	PARTIAL JOINT PENETRATION
Pkwy	PARKWAY
ℙ,PL	PLATE
P/L	PROPERTY LINE
PM	POST MILE,
	TIME FROM NOON TO MIDNIGHT
PN	PAVING NOTCH
POC	POINT OF HORIZONTAL CURVE
POT	POINT OF TANGENT
POVC	POINT OF VERTICAL CURVE
PP	PIPE PILE,
	PLASTIC PIPE,
	POWER POLE
PPL	PREFORMED PERMEABLE LINER
PPP	PERFORATED PLASTIC PIPE
PRC	POINT OF REVERSE CURVE
PRF	PAVEMENT REINFORCING FABRIC
PRVC	POINT OF REVERSE VERTICAL CURVE
PS&E	PLANS, SPECIFICATIONS AND ESTIMATES
PS, P/S	PRESTRESSED
PSP	PERFORATED STEEL PIPE
PT	POINT OF TANGENCY
PVC	POLYVINYL CHLORIDE
Pvmt	PAVEMENT

Q

Qty	QUANTITY

R

R	RADIUS
R & D	REMOVE AND DISPOSE
R & S	REMOVE AND SALVAGE
R/C	RATE OF CHANGE
RCA	REINFORCED CONCRETE ARCH
RCB	REINFORCED CONCRETE BOX
RCP	REINFORCED CONCRETE PIPE
RCPA	REINFORCED CONCRETE PIPE ARCH
Rd	ROAD
Reinf	REINFORCED,
	REINFORCEMENT,
	REINFORCING
Rel	RELOCATE
Repl	REPLACEMENT
Ret	RETAINING
Rev	REVISED, REVISION
Rdwy	ROADWAY
RHMA	RUBBERIZED HOT MIX ASPHALT
Riv	RIVER
RM	ROAD-MIXED
RP	RADIUS POINT,
	REFERENCE POINT
RR	RAILROAD
RSP	ROCK SLOPE PROTECTION,
	REVISED STANDARD PLAN
Rt	RIGHT
Rte	ROUTE
RW	REDWOOD,
	RETAINING WALL
R/W	RIGHT OF WAY
Rwy	RAILWAY

S

S	SOUTH,
	SUPPLEMENT
SAE	STRUCTURE APPROACH EMBANKMENT
Salv	SALVAGE
SAPP	STRUCTURAL ALUMINUM PLATE PIPE
SB	SOUTHBOUND
SC	SAND CUSHION
SCSP	SLOTTED CORRUGATED STEEL PIPE
SD	STORM DRAIN
Sec	SECOND,
	SECTION
Sep	SEPARATION
SG	SUBGRADE
Shld	SHOULDER
Sht	SHEET
Sim	SIMILAR
℄	STATION LINE
SM	SELECTED MATERIAL
Spec	SPECIAL,
	SPECIFICATIONS
SPP	SLOTTED PLASTIC PIPE
SS	SLOPE STAKE
SSBM	STRAP AND SADDLE BRACKET METHOD
SSD	STRUCTURAL SECTION DRAIN
SSPA	STRUCTURAL STEEL PLATE ARCH
SSPP	STRUCTURAL STEEL PLATE PIPE
SSPPA	STRUCTURAL STEEL PLATE PIPE ARCH
SSRP	STEEL SPIRAL RIB PIPE
St	STREET
Sta	STATION
STBB	SINGLE THRIE BEAM BARRIER
Std	STANDARD
Str	STRUCTURE
Surf	SURFACING
SW	SIDEWALK,
	SOUND WALL
Swr	SEWER
Sym	SYMMETRICAL
S4S	SURFACE 4 SIDES

T

T	SEMI-TANGENT
Tan	TANGENT
TBB	THRIE BEAM BARRIER
Tbr	TIMBER
TC	TOP OF CURB
TCB	TRAFFIC CONTROL BOX
TCE	TEMPORARY CONSTRUCTION EASEMENT
Tel	TELEPHONE
Temp	TEMPORARY
TG	TOP OF GRADE
Tot	TOTAL
TP	TELEPHONE POLE
TPB	TREATED PERMEABLE BASE
TPM	TREATED PERMEABLE MATERIAL
Trans	TRANSITION

T continued

TS	TRANSVERSE,
	TRAFFIC SIGNAL,
	TUBULAR STEEL
Typ	TYPICAL

U

UC	UNDERCROSSING
UD	UNDERDRAIN
UG	UNDERGROUND
UON	UNLESS OTHERWISE NOTED
UP	UNDERPASS

V

V	VALVE,
	DESIGN SPEED
Var	VARIABLE,
	VARIES
VC	VERTICAL CURVE
VCP	VITRIFIED CLAY PIPE
Vert	VERTICAL
Via	VIADUCT
Vol	VOLUME

W

W	WEST,
	WIDTH
WB	WESTBOUND
WH	WEEP HOLE
WM	WIRE MESH
WS	WATER SURFACE
WSP	WELDED STEEL PIPE
Wt	WEIGHT
WV	WATER VALVE
WW	WINGWALL
WWLOL	WINGWALL LAYOUT LINE

X

X Sec	CROSS SECTION
Xing	CROSSING

Y

Yr	YEAR
Yrs	YEARS

Dist	COUNTY	ROUTE	POST MILES TOTAL PROJECT	SHEET No.	TOTAL SHEETS
04	Ala	880	19.3	15	25

Grace M. Tsushima
REGISTERED CIVIL ENGINEER

July 19, 2013
PLANS APPROVAL DATE

REGISTERED PROFESSIONAL ENGINEER
Grace M. Tsushima
No. C49814
Exp. 9-30-14
CIVIL
STATE OF CALIFORNIA

THE STATE OF CALIFORNIA OR ITS OFFICERS OR AGENTS SHALL NOT BE RESPONSIBLE FOR THE ACCURACY OR COMPLETENESS OF SCANNED COPIES OF THIS PLAN SHEET.

TO ACCOMPANY PLANS DATED 6-27-16

2010 REVISED STANDARD PLAN RSP A10B

UNIT OF MEASUREMENT SYMBOLS:

Some of the symbols used in the project plan quantity tables and in the Bid Item List are:

TABLE A

SYMBOL USED	DEFINITIONS
ACRE	ACRE
CF	CUBIC FOOT
CY	CUBIC YARD
EA	EACH
GAL	GALLON
LB	POUND
LF	LINEAR FOOT
SQFT	SQUARE FOOT
SQYD	SQUARE YARD
STA	100 FEET
TAB	TABLET
TON	2,000 POUNDS

Some of the symbols used in the plans other than in the project plan quantity tables are:

TABLE B

SYMBOL USED	DEFINITIONS
ksi	KIPS PER SQUARE INCH
ksf	KIPS PER SQUARE FOOT
psi	POUNDS PER SQUARE INCH
psf	POUNDS PER SQUARE FOOT
lb/ft^3, pcf	POUNDS PER CUBIC FOOT
tsf	TONS PER SQUARE FOOT
mph, MPH *	MILES PER HOUR
ø	NOMINAL DIAMETER
oz	OUNCE
lb	POUND
kip	1,000 POUNDS
cal	CALORIE
ft	FOOT OR FEET
gal	GALLON

* For use on a sign panel only

STATE OF CALIFORNIA
DEPARTMENT OF TRANSPORTATION

ABBREVIATIONS (SHEET 2 OF 2)

NO SCALE

RSP A10B DATED JULY 19, 2013 SUPERSEDES STANDARD PLAN A10B DATED MAY 20, 2011 - PAGE 2 OF THE STANDARD PLANS BOOK DATED 2010.

REVISED STANDARD PLAN RSP A10B

6-7-13

Dist	COUNTY	ROUTE	POST MILES TOTAL PROJECT	SHEET No.	TOTAL SHEETS
04	Ala	880	19.3	16	25

REGISTERED CIVIL ENGINEER 23

July 15, 2016
PLANS APPROVAL DATE

PROFESSIONAL ENGINEER REGISTERED 23 Carl M. Duan No. C59976 Exp. 6-30-18 CIVIL STATE OF CALIFORNIA

THE STATE OF CALIFORNIA OR ITS OFFICERS OR AGENTS SHALL NOT BE RESPONSIBLE FOR THE ACCURACY OR COMPLETENESS OF SCANNED COPIES OF THIS PLAN SHEET.

TO ACCOMPANY PLANS DATED 6-27-16

FACE ANGLE DETAIL "A"	
LENGTH OF CURB OPENING	No. OF ANCHORS
3'-6" OR LESS	2
7'-0"	3
10'-0"	4
14'-0"	5
21'-0"	7

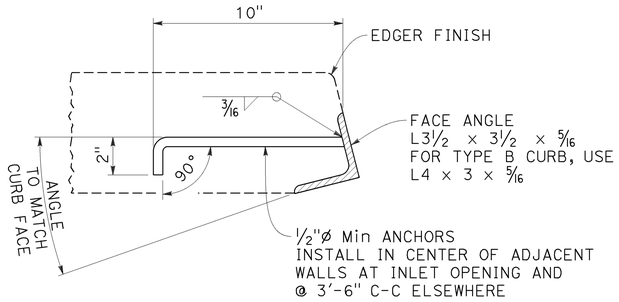

DETAIL "A"

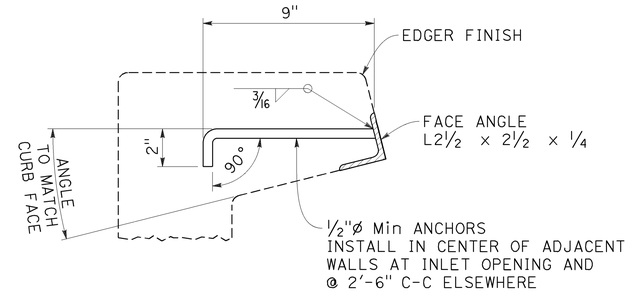

DETAIL "B"

FACE ANGLE AND ANCHOR

NOTE:

1. When shown on the project plans, place a ¾"ø plain round protection bar horizontally across the length of the opening and bend back 4" into the inlet wall on each side.

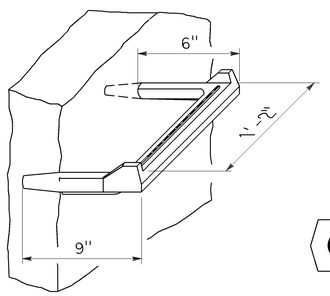

STEP INSERT

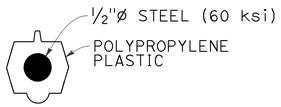

TYPICAL SECTION
(STEP INSERT)

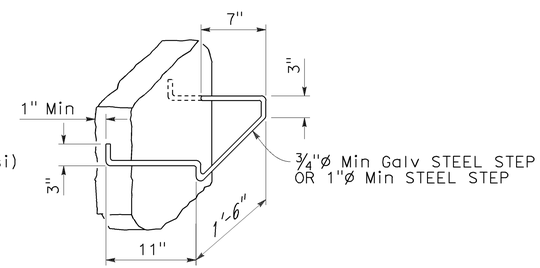

BAR STEP

STEP DETAILS

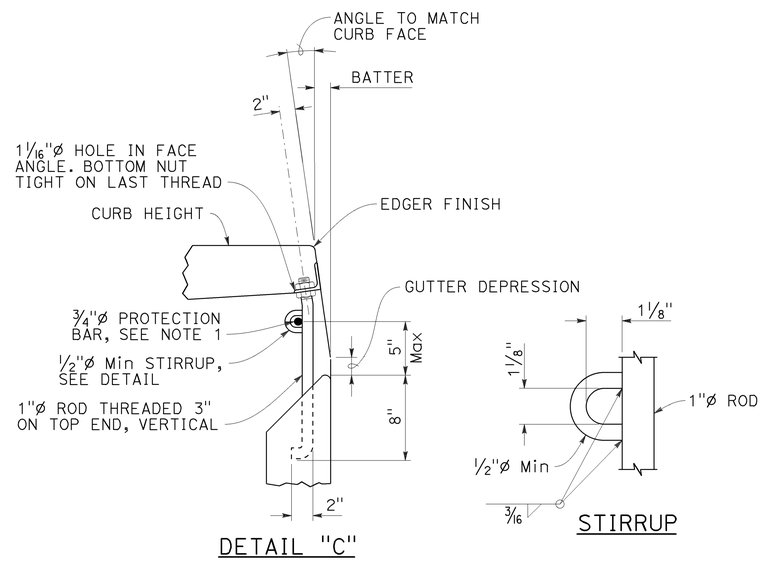

DETAIL "C"

STIRRUP

CURB SUPPORT

CURB SUPPORTS SHALL BE EVENLY SPACED AND MINIMAL IN NUMBER SUCH THAT MAXIMUM SPAN OF UNSUPPORTED CURB IS 7'-0".

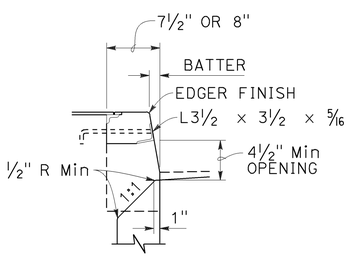

TYPE A CURBS

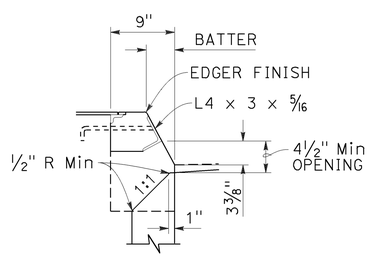

TYPE B CURBS

CURB OPENING DETAILS

STATE OF CALIFORNIA
DEPARTMENT OF TRANSPORTATION

DRAINAGE INLET DETAILS

NO SCALE

RSP D74 DATED JULY 15, 2016 SUPPLEMENTS THE STANDARD PLANS BOOK DATED 2010.

REVISED STANDARD PLAN RSP D74

2010 REVISED STANDARD PLAN RSP D74

6-20-16

Dist	COUNTY	ROUTE	POST MILES TOTAL PROJECT	SHEET No.	TOTAL SHEETS
04	Ala	880	19.3	17	25

Raymond Don Tsztoo
REGISTERED CIVIL ENGINEER

October 30, 2015
PLANS APPROVAL DATE

REGISTERED PROFESSIONAL ENGINEER
Raymond Don Tsztoo
No. C37332
Exp. 6-30-16
CIVIL
STATE OF CALIFORNIA

THE STATE OF CALIFORNIA OR ITS OFFICERS OR AGENTS SHALL NOT BE RESPONSIBLE FOR THE ACCURACY OR COMPLETENESS OF SCANNED COPIES OF THIS PLAN SHEET.

TO ACCOMPANY PLANS DATED 6-27-16

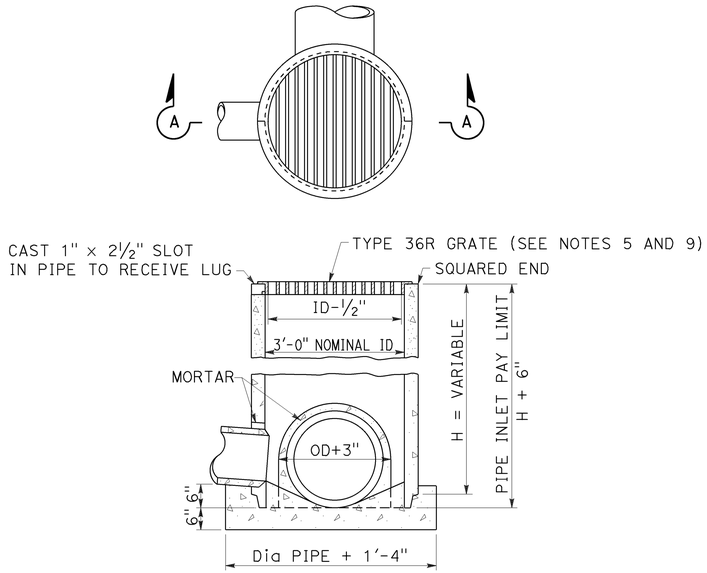

SECTION A-A
TYPE GCP
Concrete pipe inlet with grate

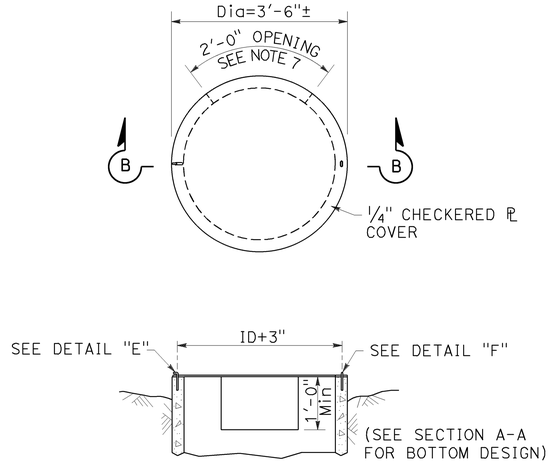

SECTION B-B
TYPE OCP or OCPI
Concrete pipe inlet with steel cover
(See Note 6)

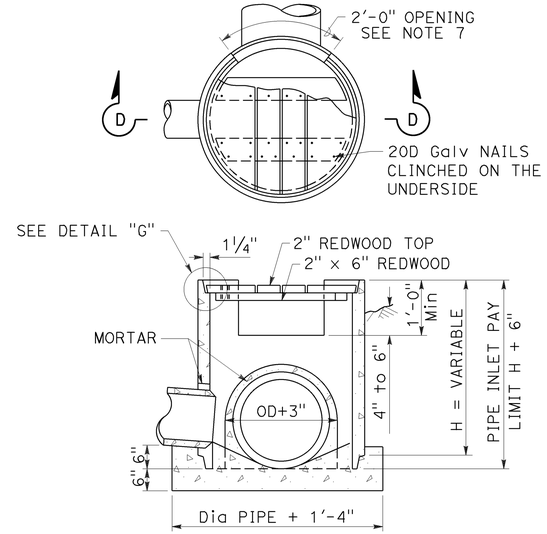

SECTION D-D
TYPE OCP or OCPI
Concrete pipe inlet with redwood cover
(See Notes 6 and 10)

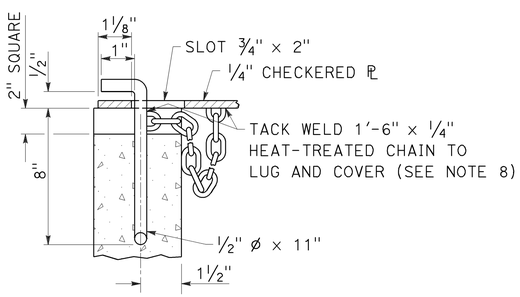

DETAIL "E"

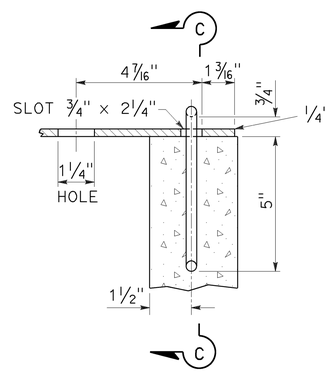

DETAIL "F"

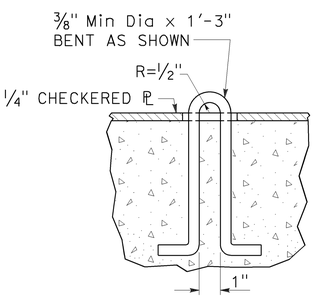

SECTION C-C

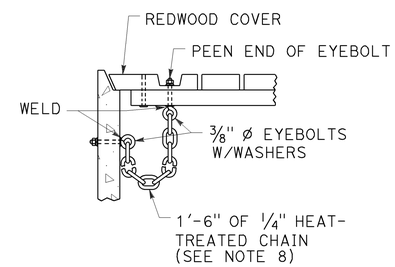

DETAIL "G"

NOTES:

1. For details of steel pipe inlets, see Standard Plan D75A.
2. For details of ladder and steps and when ladder or steps are required, see Standard Plan D75C.
3. Inlet pipes shall not protrude into basin.
4. Except for inlets used for junction boxes, basin floors shall have minimum slope of 4:1 from all directions toward outlet pipe, and a wood trowel finish.
5. See Revised Standard Plans RSP D77A and RSP D77B for Grate and Frame Details and Weights of Miscellaneous Iron and Steel.
6. Designation of Type OCPI pipe inlets on plans indicates trash racks are to be furnished and installed on all side openings. See Standard Plan D75C for Trash Rack details.
7. More than one side opening may be required. Location and number as ordered by the Engineer. Opening may be cast in pipe.
8. Chain to be provided when specified.
9. Place pipe so bars of grate will be parallel with main surface flow.
10. Redwood covers shall only be placed at locations designated on the plans.

STATE OF CALIFORNIA
DEPARTMENT OF TRANSPORTATION

CONCRETE PIPE INLETS

NO SCALE

RSP D75B DATED OCTOBER 30, 2015 SUPERSEDES STANDARD PLAN D75B DATED MAY 20, 2011 - PAGE 162 OF THE STANDARD PLANS BOOK DATED 2010.

REVISED STANDARD PLAN RSP D75B

2010 REVISED STANDARD PLAN RSP D75B

9-25-15

Dist	COUNTY	ROUTE	POST MILES TOTAL PROJECT	SHEET No.	TOTAL SHEETS
04	Ala	880	19.3	18	25

Raymond Don Tsztoo
REGISTERED CIVIL ENGINEER

April 19, 2013
PLANS APPROVAL DATE

REGISTERED PROFESSIONAL ENGINEER Raymond Don Tsztoo No. C37332 Exp. 6-30-14 CIVIL STATE OF CALIFORNIA

THE STATE OF CALIFORNIA OR ITS OFFICERS OR AGENTS SHALL NOT BE RESPONSIBLE FOR THE ACCURACY OR COMPLETENESS OF SCANNED COPIES OF THIS PLAN SHEET.

TO ACCOMPANY PLANS DATED 6-27-16

2010 REVISED STANDARD PLAN RSP D77A

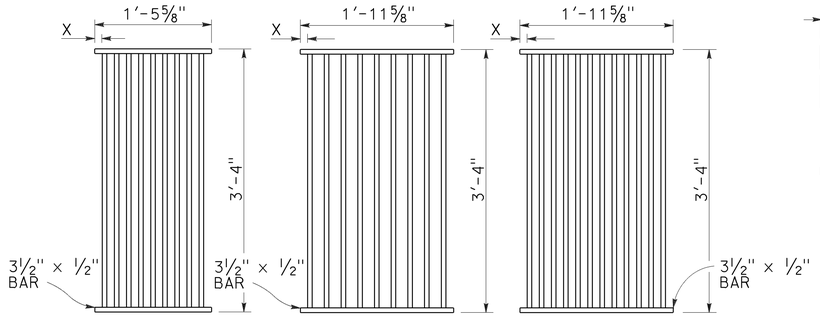

TYPE 18-9

1⅜" Clear spacing. Use within the roadbed on highways where bicycles and pedestrians are excluded.

TYPE 24-9

2" Clear spacing. Use in locations off the roadbed on all types of highways.

TYPE 24-12

1⅜" Clear spacing. Use within the roadbed on highways where bicycles and pedestrians are excluded.

RECTANGULAR GRATE DETAILS

(See table below)

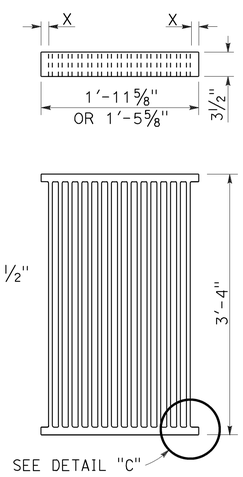

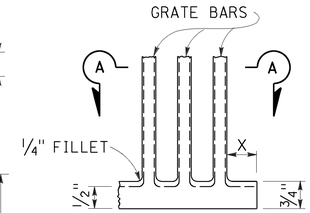

DETAIL "C"

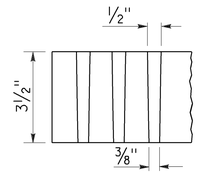

SECTION A-A

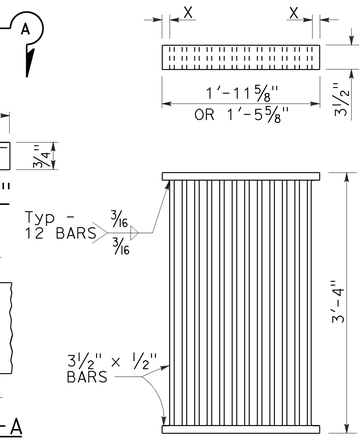

ALTERNATIVE CAST DUCTILE IRON GRATE OR CAST CARBON STEEL GRATE

ALTERNATIVE WELDED GRATE

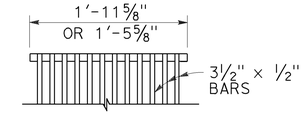

CAST END BLOCK

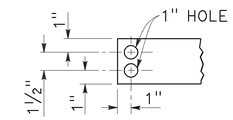

END OF BAR

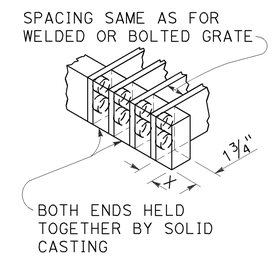

ALTERNATIVE CAST DUCTILE IRON OR CAST CARBON STEEL END BLOCK GRATE

NOTES:

1. Grate type numbers refer to approximate width of grate in inches and number of bars, respectively.
2. Contractor has the option of using cast ductile iron, cast carbon steel, welded, bolted, or cast end block grate.
3. Rounded top of bars optional on all grates.
4. Pipe inlets with a grate shall be placed so that bars parallel direction of principle surface flow.
5. Complete joint penetration butt welds may be substituted for the fillet welds on all anchors.
6. Standard square, hexagon, round or equivalent headed anchors may be substituted for the right angle hooks on the anchors shown on this plan.
7. Grate and frame weights are based on welded grates (weights of face angles, steps, protection bars, etc. are not included).
8. Connect chain to grate and frame only at locations shown on the plans. When chain is required, do not use cast ductile iron grates.

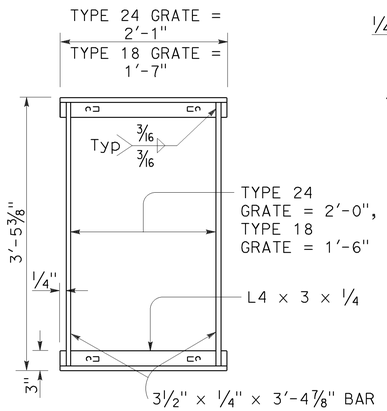

TYPICAL FRAME

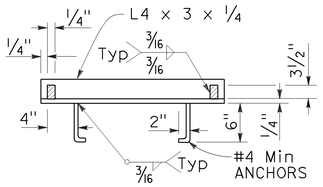

CROSS SECTION

(Thru frame)

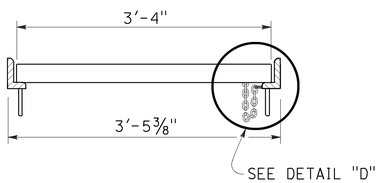

LONGITUDINAL SECTION

(Thru frame and grate)

RECTANGULAR FRAME DETAILS

(For all rectangular grates)

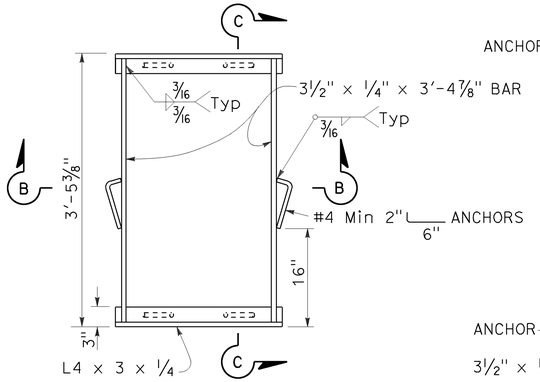

TYPICAL FRAME

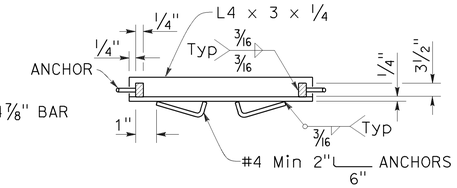

SECTION B-B

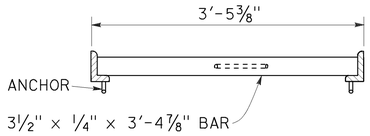

SECTION C-C

ALTERNATIVE ANCHOR FOR RECTANGULAR FRAME

(For details not shown, See Rectangular Frame Details)

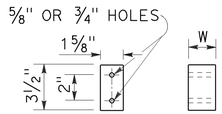

BAR SPACER

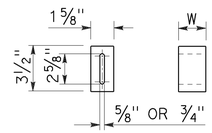

ALTERNATIVE SPACER

W = 1⅜" or 2"

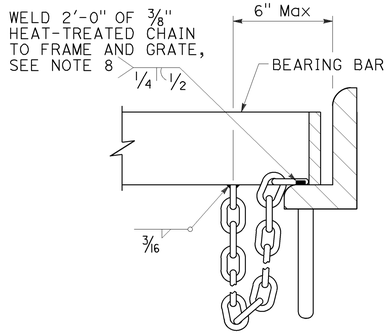

DETAIL "D"

(Steel grates only)

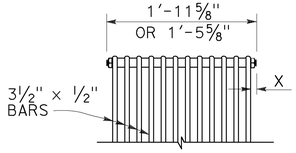

BOLTED END BLOCK

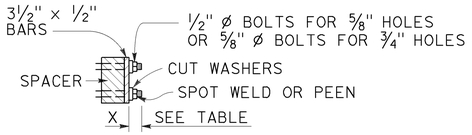

BOLTING DETAIL

ALTERNATIVE BOLTED GRATE

GRATE BAR SPACING TABLE

TYPE	No. OF BARS	CLEAR BAR SPACING	X
18-9	9	1⅜"	1 1/16"
24-9	9	2"	1 9/16"
24-12	12	1⅜"	1¼"

INLET TYPE	COVER TYPE	WEIGHT LB
OS	PLATE	174
OL-7	PLATE	170
OL-10	PLATE	170
OL-14	PLATE	170
OL-21	PLATE	170
OCP	PLATE	112
OCPI	PLATE	112
OCPI	REDWOOD	42
OMP	PLATE	177
OMPI	PLATE	177

INLET TYPE	GRATE TYPE	No. OF GRATES	WEIGHT LB
GDO	24-12	2	634
GOL-7	24-12	1	326
GOL-10	24-12	1	326
GO,G1,G2,G3,G4 (TYPE 24)	24-9	1	263
	24-12	1	326
G4 (TYPE 18),G5,G6	18-9	1	249
GT1	18-9	2	498
GT2	18-9	2	498
GT3	24-12	2	652
GT4	24-12	2	652
TRASH RACK			22
GRATE CHAIN			3

BASIS FOR Misc IRON & STEEL FINAL PAY WEIGHTS FOR DRAINAGE INLETS

(See Note 7)

STATE OF CALIFORNIA
DEPARTMENT OF TRANSPORTATION

GRATE DETAILS No. 1

NO SCALE

RSP D77A DATED APRIL 19, 2013 SUPERSEDES RSP D77A DATED JULY 20, 2012 AND STANDARD PLAN D77A DATED MAY 20, 2011 - PAGE 164 OF THE STANDARD PLANS BOOK DATED 2010.

REVISED STANDARD PLAN RSP D77A

4-4-13

Dist	COUNTY	ROUTE	POST MILES TOTAL PROJECT	SHEET No.	TOTAL SHEETS
04	Ala	880	19.3	19	25

Gregory A. Balzer
LICENSED LANDSCAPE ARCHITECT

July 19, 2013
PLANS APPROVAL DATE

THE STATE OF CALIFORNIA OR ITS OFFICERS OR AGENTS SHALL NOT BE RESPONSIBLE FOR THE ACCURACY OR COMPLETENESS OF SCANNED COPIES OF THIS PLAN SHEET.

LICENSED LANDSCAPE ARCHITECT — Gregory A. Balzer — 2576 — Expiration Date 2-28-15 — Renewal Date 7-19-13 — Date — STATE OF CALIFORNIA

TO ACCOMPANY PLANS DATED 6-27-16

A

AB	AGGREGATE BASE
ABS	ACRYLONITRILE-BUTADIENE-STYRENE
AC	ASPHALT CONCRETE
ACC	ARMOR-CLAD CONDUCTORS
Adj	ADJACENT/ADJUSTABLE
AIC	AUXILIARY IRRIGATION CONTROLLER
Alt	ALTERNATIVE
AMEND	AMENDMENT
ARV	AIR RELEASE VALVE
AUTO	AUTOMATIC
AUX	AUXILIARY
AVB	ATMOSPHERIC VACUUM BREAKER

B

B&B	BALLED AND BURLAPPED
B/B	BRASS/BRONZE
B/B/PL	BRASS/BRONZE/PLASTIC
B/PL	BRASS/PLASTIC
BFM	BONDED FIBER MATRIX
Bit Ctd	BITUMINOUS COATED
BP	BOOSTER PUMP
BPA	BACKFLOW PREVENTER ASSEMBLY
BPE	BACKFLOW PREVENTER ENCLOSURE
BV	BALL VALVE

C

C	CONDUIT
CAP	CORRUGATED ALUMINUM PIPE
CARV	COMBINATION AIR RELEASE VALVE
CB	COUPLING BAND
CCA	CAM COUPLER ASSEMBLY
CEC	CONTROLLER ENCLOSURE CABINET
CHDPE	CORRUGATED HIGH DENSITY POLYETHYLENE
CL	CHAIN LINK
CNC	CONTROL AND NEUTRAL CONDUCTORS
Conc	CONCRETE
CP	COPPER PIPE
CS	COMPOST SOCK
CSP	CORRUGATED STEEL PIPE
CST	CENTER STRIP
CV	CHECK VALVE

D

Dia	DIAMETER
DIP	DUCTILE IRON PIPE
DIT	DRIP IRRIGATION TUBING
DG	DECOMPOSED GRANITE
DN	DIAMETER NOMINAL
DVA	DRIP VALVE ASSEMBLY

E

EC	EROSION CONTROL
ECTC	EROSION CONTROL TECHNOLOGY COUNCIL
Elect	ELECTRIC/ELECTRICAL
Elev	ELEVATION
ELL	ELBOW
ENCL	ENCLOSURE
EP	EDGE OF PAVEMENT
ES	EDGE OF SHOULDER
EST	END STRIP
ESTB	ESTABLISHMENT
ETW	EDGE OF TRAVELED WAY

F

F	FULL CIRCLE
F/P	FULL/PART CIRCLE
FCV	FLOW CONTROL VALVE
FERT	FERTILIZER
FG	FINISHED GRADE
FH	FLEXIBLE HOSE
FIPT	FEMALE IRON PIPE THREAD
FIS	FERTILIZER INJECTOR SYSTEM
FL	FLOW LINE
FR	FIBER ROLL
FS	FLOW SENSOR
FSC	FLOW SENSOR CABLE
FV	FLUSH VALVE

G

Galv	GALVANIZED
GARV	GARDEN VALVE
GARVA	GARDEN VALVE ASSEMBLY
GM	GRAVEL MULCH
GPH	GALLONS PER HOUR
GPM	GALLONS PER MINUTE
GSP	GALVANIZED STEEL PIPE
GV	GATE VALVE

H

H	HALF CIRCLE
HDPE	HIGH DENSITY POLYETHYLENE
HP	HORSEPOWER/HINGE POINT
HPL	HIGH PRESSURE LINE
Hwy	HIGHWAY

I

IC	IRRIGATION CONTROLLER
ICC	IRRIGATION CONTROLLER(S) IN CONTROLLER ENCLOSURE CABINET
ID	INSIDE DIAMETER
IFS	IRRIGATION FILTRATION SYSTEM
IPS	IRON PIPE SIZE
IPT	IRON PIPE THREAD
Irr	IRRIGATION

L

L	LENGTH

M

Max	MAXIMUM
MBGR	METAL BEAM GUARD RAILING
MCV	MANUAL CONTROL VALVE
MIC	MASTER IRRIGATION CONTROLLER
Min	MINIMUM
MIPT	MALE IRON PIPE THREAD
Misc	MISCELLANEOUS
Mtl	MATERIAL
MVP	MAINTENANCE VEHICLE PULLOUT

N

NCN	NO COMMON NAME
NL	NOZZLE LINE
No.	NUMBER
NPT	NATIONAL PIPE THREAD

O

O/C	ON CENTER
OD	OUTSIDE DIAMETER
OL	OVERLAP

P

P	PART CIRCLE
PB	PULL BOX
PCC	PORTLAND CEMENT CONCRETE
PE	POLYETHYLENE
Pkt	PACKET
PL	PLASTIC
PLS	PURE LIVE SEED
PLT	PLANT/PLANTING
PLT ESTB	PLANT ESTABLISHMENT
PM	POST MILE
PR	PRESSURE RATED
PRLV	PRESSURE RELIEF VALVE
PRV	PRESSURE REGULATING VALVE
PVC	POLYVINYL CHLORIDE
Pvmt	PAVEMENT

Q

Q	QUARTER CIRCLE
QCV	QUICK COUPLING VALVE

R

R	RADIUS
RCP	REINFORCED CONCRETE PIPE
RCV	REMOTE CONTROL VALVE
RCVM	REMOTE CONTROL VALVE (MASTER)
RCVMF	REMOTE CONTROL VALVE (MASTER) W/FLOW SENSOR
RCVP	REMOTE CONTROL VALVE W/PRESSURE REGULATOR
RCW	RECYCLED WATER
RECP	ROLLED EROSION CONTROL PRODUCT
REQ	REQUIRED
RICS	REMOTE IRRIGATION CONTROL SYSTEM
R/W	RIGHT OF WAY

S

S	SLIP
SCH	SCHEDULE
SF	STATE-FURNISHED
Shld	SHOULDER
Sq	SQUARE
SST	SIDE STRIP
Sta	STATION
Std	STANDARD
SW	SIDEWALK/SOUND WALL

T

T	THIRD CIRCLE/THREAD
TLS	TRUCK LOADING STANDPIPE
TQ	THREE QUARTER CIRCLE
TRM	TURF REINFORCEMENT MAT
TT	TWO-THIRDS CIRCLE
TWSA	TREE WELL SPRINKLER ASSEMBLY
Typ	TYPICAL

U

UG	UNDERGROUND

W

W	WIDTH
W/	WITH
WM	WATER METER
WS	WYE STRAINER
WSA	WYE STRAINER ASSEMBLY
WSP	WELDED STEEL PIPE
WWM	WELDED WIRE MESH

NOTE:

For additional abbreviations, see Standard Plans A10A and A10B.

STATE OF CALIFORNIA
DEPARTMENT OF TRANSPORTATION

LANDSCAPE AND EROSION CONTROL ABBREVIATIONS

NO SCALE

RSP H1 DATED JULY 19, 2013 SUPERSEDES STANDARD PLAN H1 DATED MAY 20, 2011 - PAGE 218 OF THE STANDARD PLANS BOOK DATED 2010.

REVISED STANDARD PLAN RSP H1

2010 REVISED STANDARD PLAN RSP H1

6-28-13

Dist	COUNTY	ROUTE	POST MILES TOTAL PROJECT	SHEET No.	TOTAL SHEETS
04	Ala	880	19.3	20	25

Gregory A. Balzer
LICENSED LANDSCAPE ARCHITECT

November 15, 2013
PLANS APPROVAL DATE

LICENSED LANDSCAPE ARCHITECT
Gregory A. Balzer 2576
Signature
2-28-15
Renewal Date
11-15-13
Date
STATE OF CALIFORNIA

THE STATE OF CALIFORNIA OR ITS OFFICERS OR AGENTS SHALL NOT BE RESPONSIBLE FOR THE ACCURACY OR COMPLETENESS OF SCANNED COPIES OF THIS PLAN SHEET.

TO ACCOMPANY PLANS DATED 6-27-16

EXISTING	NEW	ITEM DESCRIPTION
		WATER METER (WM)
		BACKFLOW PREVENTER ASSEMBLY (BPA)
		BACKFLOW PREVENTER ENCLOSURE (BPE)
		BOOSTER PUMP (BP)
		TRUCK LOADING STANDPIPE (TLS)
FS	FS	FLOW SENSOR (FS)
		MASTER IRRIGATION CONTROLLER (MIC)
		AUXILIARY IRRIGATION CONTROLLER (AIC)
		IRRIGATION CONTROLLER (IC) IRRIGATION CONTROLLER (IC) (BATTERY) IRRIGATION CONTROLLER (IC) (SOLAR) IRRIGATION CONTROLLER (IC) (TWO WIRE) IRRIGATION CONTROLLER(S) IN CONTROLLER ENCLOSURE CABINET (ICC)
acc	ACC	ARMOR-CLAD CONDUCTORS (ACC)
cnc	CNC	CONTROL AND NEUTRAL CONDUCTORS (CNC)
		IRRIGATION CONDUIT
		EXTEND IRRIGATION CONDUIT
dip	DIP	DUCTILE IRON PIPE (SUPPLY LINE) (MAIN) (DIP)
		GALVANIZED STEEL PIPE (SUPPLY LINE) (MAIN) (GSP)
		GALVANIZED STEEL PIPE (SUPPLY LINE) (LATERAL) (GSP)
		PLASTIC PIPE (SUPPLY LINE) (MAIN)
		PLASTIC PIPE (SUPPLY LINE) (LATERAL)
cp	CP	COPPER PIPE (SUPPLY LINE)
dit	DIT	DRIP IRRIGATION TUBING
		REMOTE CONTROL VALVE (RCV) REMOTE CONTROL VALVE (MASTER) (RCVM) REMOTE CONTROL VALVE (MASTER) W/FLOW METER (RCVMF)
P	P	REMOTE CONTROL VALVE W/PRESSURE REGULATOR (RCVP)
		EXISTING MANUAL CONTROL VALVE (MCV)
		DRIP VALVE ASSEMBLY (DVA)
		WYE STRAINER ASSEMBLY (WSA)

EXISTING	NEW	ITEM DESCRIPTION
		GATE VALVE (GV)
		BALL VALVE (BV)
		QUICK COUPLING VALVE (QCV)
		CAM COUPLER ASSEMBLY (CCA)
		GARDEN VALVE ASSEMBLY (GARVA)
		PRESSURE REGULATING VALVE (PRV)
		PRESSURE RELIEF VALVE (PRLV)
		FLOW CONTROL VALVE (FCV)
		COMBINATION AIR RELEASE VALVE (CARV)
		CHECK VALVE (CV)
		FLUSH VALVE (FV)
		EXISTING NOZZLE LINE W/TURNING UNION
		EXISTING IRRIGATION SYSTEM
		EXISTING IRRIGATION SYSTEM TO BE REMOVED
		CHAIN LINK GATE
		QUICK COUPLING VALVE W/SPRINKLER PROTECTOR
3	3	SPRINKLER W/SPRINKLER PROTECTOR
	C	CONNECT TO EXISTING SYSTEM
		CAP
		CAP EXISTING
	\\\FR\\\	FIBER ROLL
	\\\CS\\\	COMPOST SOCK

RCV SIZE
IRRIGATION CONTROLLER
CONTROLLER STATION
VALVE IN PARALLEL (IF APPLICABLE)
GPM
QUANTITY OF SPRINKLERS (WHEN SHOWN)

* 2½"-A-2b-40-60

VALVE CODE

* VALVE CODES FOR EXISTING VALVES ARE SHOWN IN A DASHED ENCLOSURE.

STATE OF CALIFORNIA
DEPARTMENT OF TRANSPORTATION

LANDSCAPE AND EROSION CONTROL SYMBOLS

NO SCALE

RSP H2 DATED NOVEMBER 15, 2013 SUPERSEDES RSP H2 DATED JULY 19, 2013 AND STANDARD PLAN H2 DATED MAY 20, 2011 - PAGE 219 OF THE STANDARD PLANS BOOK DATED 2010.

REVISED STANDARD PLAN RSP H2

2010 REVISED STANDARD PLAN RSP H2

10-9-13

Dist	COUNTY	ROUTE	POST MILES TOTAL PROJECT	SHEET No.	TOTAL SHEETS
04	Ala	880	19.3	21	25

Tahir Rashid 02-05-16
REGISTERED CIVIL ENGINEER DATE

6-27-16
PLANS APPROVAL DATE

REGISTERED PROFESSIONAL ENGINEER Tahir Rashid No. 61932 Exp. 9-30-17 CIVIL STATE OF CALIFORNIA

The State of California or its officers or agents shall not be responsible for the accuracy or completeness of scanned copies of this plan sheet.

A PUMPING PLANT DESIGN NOTES:

1. Design: AASHTO LRFD Bridge Design Specification, 4th Edition with California Amendments Preface dated December 2008
   a. Loads:
      Vertical Box:
      Earth Loads (Equivalant Fluid Pressure):
      60 pcf above GWT
      90 pcf below GWT
      Horizontal Box:
      Live Load: HS 20-44 Truck
      Roof: 30% impact up to 3' of cover, no impact above 3' of cover.
      Walls: No surcharge
      Invert: No impact
      Earth Loads (Equivalant Fluid Pressure for two conditions):
      140 pcf vertical and 42 pcf horizontal
      140 pcf vertical and horizontal
      Landings: Live Load 100 psf
   b. Reinforced Concrete (Ultimate Strength Design):
      f'c = 3,250 psi
      fy= 60,000 psi
   c. Miscellaneous Metal (Working Stress Design):
      fy=36,000 psi unless otherwise noted
2. Soil Report: Assumed

B DETAIL NOTES:

1. Metal Work Notes:
   a. All metal work shall be hot dip galvanized after fabrication
   b. Secure metal to metal connections with a 5/8"ø x 1½" hex head machine bolt, lock washer and hex nut unless otherwise noted.
   c. Mechanical Expansion Anchors shall be 5/8"ø and have a 4" minimum embedment, 3'-0" maximum spacing and placed 6" from ends, two minimum, unless otherwise noted.
   d. Mechanical Expansion Anchors used for securing ladders inside of Pumping Plant shall be of stainless steel.
   e. All lock washers shall be helical spring lock washers.
   f. All Railing and Ladders shall have smooth edges.
2. For Discharge Pipe locations and elevations, see Drainage sheet DP-1.
3. For APC and CIPCP elevation and locations, see Road Plans.

ABBREVIATIONS

Alt	ALTERNATIVE
APC	ALTERNATIVE PIPE CULVERT
C-C	CENTER-TO-CENTER
Clr	CLEAR
Conc	CONCRETE
Const	CONSTRUCTION
EL	ELEVATION
(E)	EXISTING
Exp	EXPANSION
FOC	FACE OF CONCRETE
FG	FINISH GRADE
FL	FLOW LINE
GWT	GROUND WATER TABLE
Jt	JOINT
MEA	MECHANICAL EXPANSION ANCHOR
OH	OPPOSITE HAND
PP LOL	PUMPING PLANT LAYOUT LINE
R	RADIUS
RCP	REINFORCED CONCRETE PIPE
Sim	SIMILAR
Stagg	STAGGERED
Sym	SYMMETRICAL
Typ	TYPICAL

SYMBOLS

ELEVATION OF WORKING POINT

EXISTING FEATURES

EARTH

FREE DRAINING GRANULAR MATERIAL

REINFORCED CONCRETE

3 5b ST-1 — DETAIL NUMBER OR NOTE NUMBER; ADDITIONAL REFERENCE (IF REQUIRED); SHEET NUMBER

LIMITS OF STRUCTURE BACKFILL (SHOWN ON PLAN VIEW)

CONCRETE REMOVAL

X STX-X — PARTIAL SECTION CUT

X STX-X — FULL SECTION CUT

QUANTITIES

REMOVE CONCRETE (STRUCTURE)	7 CY
STRUCTURE EXCAVATION	23 CY
STRUCTURE BACKFILL	10 CY
STRUCTURAL CONCRETE DRAINAGE INLET	9 CY
BAR REINFORCING STEEL	978 LB
MISCELLANEOUS IRON AND STEEL	100 LB
MANHOLE FRAME AND COVER	1 EA

	BY	CHECKED
DESIGN	Tahir Rashid	Thomas Tong
DETAILS	Andrew A. Lovato	Tahir Rashid
QUANTITIES		

STATE OF CALIFORNIA DEPARTMENT OF TRANSPORTATION

DIVISION OF ENGINEERING SERVICES ARCHITECTURAL AND STRUCTURAL DESIGN

BRIDGE No. 33-180W
POST MILE 19.3

HACIENDA AVE PUMPING PLANT

DESIGN CRITERIA AND DETAIL NOTES

SHEET ST1-0

TAEMWW Imperial - CCSC Rev. 04/14

ORIGINAL SCALE IN INCHES FOR REDUCED PLANS 0 1 2 3

UNIT: 3581 CONTRACT No.: 04-1SS444
PROJECT NUMBER & PHASE: 04120006031

DISREGARD PRINTS BEARING EARLIER REVISION DATES → 01-28-15 11-03-15 01-28-16 08-22-16

REVISION DATES (PRELIMINARY STAGE ONLY) SHEET OF

23-AUG-2016 13:16

P:\1ss44\DRAFTING\FINAL_PS&E\st1_00.dgn

Dist	COUNTY	ROUTE	POST MILES TOTAL PROJECT	SHEET No.	TOTAL SHEETS
04	Ala	880	19.3	22	25

REGISTERED CIVIL ENGINEER — DATE 02-05-16

6-27-16
PLANS APPROVAL DATE

REGISTERED PROFESSIONAL ENGINEER — Tahir Rashid — No. 61932 — Exp. 9-30-17 — CIVIL — STATE OF CALIFORNIA

The State of California or its officers or agents shall not be responsible for the accuracy or completeness of scanned copies of this plan sheet.

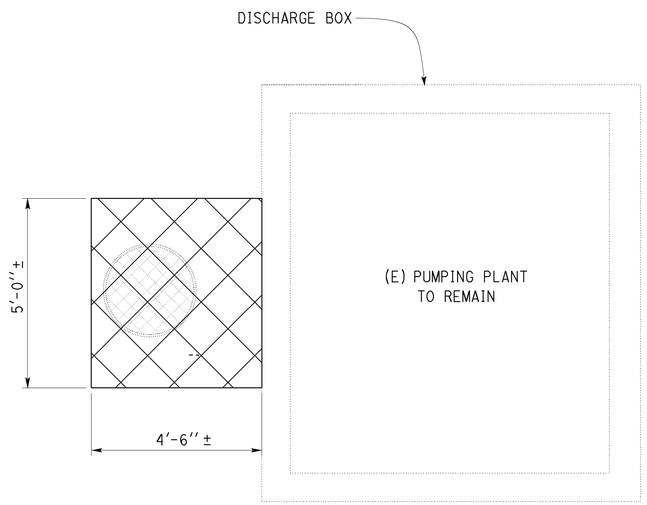

1 DEMOLITION DISCHARGE BOX PLAN

½'' = 1' - 0''

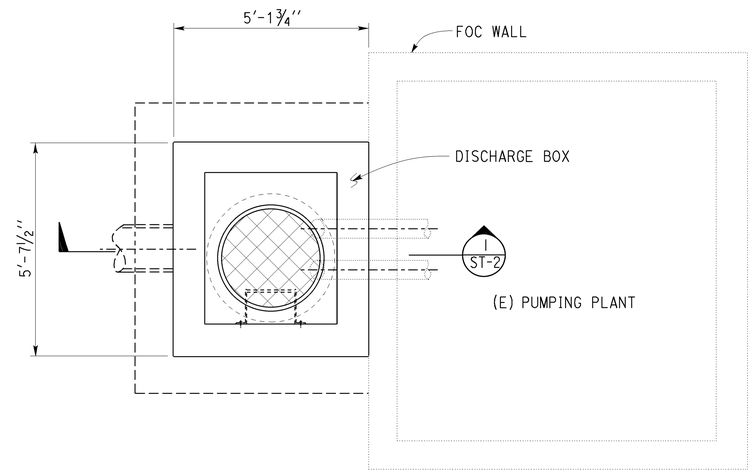

2 RECONSTRUCTED DISCHARGE BOX PLAN

½'' = 1' - 0''

DESIGN	BY Tahir Rashid	CHECKED Thomas Tong	
DETAILS	BY Andrew A. Lovato	CHECKED Tahir Rashid	
QUANTITIES	BY	CHECKED	

STATE OF CALIFORNIA
DEPARTMENT OF TRANSPORTATION

DIVISION OF ENGINEERING SERVICES
ARCHITECTURAL AND STRUCTURAL DESIGN

BRIDGE No. 33-180W
POST MILE 19.3

HACIENDA AVE PUMPING PLANT

ACCESS STAIRWAY DEMOLITION PLAN

SHEET ST1-1

TAEMWW Imperial - CCSC Rev. 04/14

ORIGINAL SCALE IN INCHES FOR REDUCED PLANS 0 1 2 3

UNIT: 3581 CONTRACT No.: 04-1SS444
PROJECT NUMBER & PHASE: 04120006031

DISREGARD PRINTS BEARING EARLIER REVISION DATES → 11-05-14 03-11-15 10-20-15 11-03-15 01-28-16 02-09-16 08-02-16

REVISION DATES (PRELIMINARY STAGE ONLY) SHEET OF

23-AUG-2016 12:33

P:\1ss44\DRAFTING\FINAL_PS&E\st1_01.dgn

Dist	COUNTY	ROUTE	POST MILES TOTAL PROJECT	SHEET No.	TOTAL SHEETS
04	Ala	880	19.3	23	25

Tahir Rashid 02-05-16
REGISTERED CIVIL ENGINEER DATE

6-27-16
PLANS APPROVAL DATE

REGISTERED PROFESSIONAL ENGINEER Tahir Rashid No. 61932 Exp. 9-30-17 CIVIL STATE OF CALIFORNIA

The State of California or its officers or agents shall not be responsible for the accuracy or completeness of scanned copies of this plan sheet.

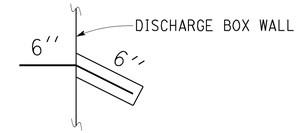

4 DOWEL DETAIL
1½'' = 1' - 0''

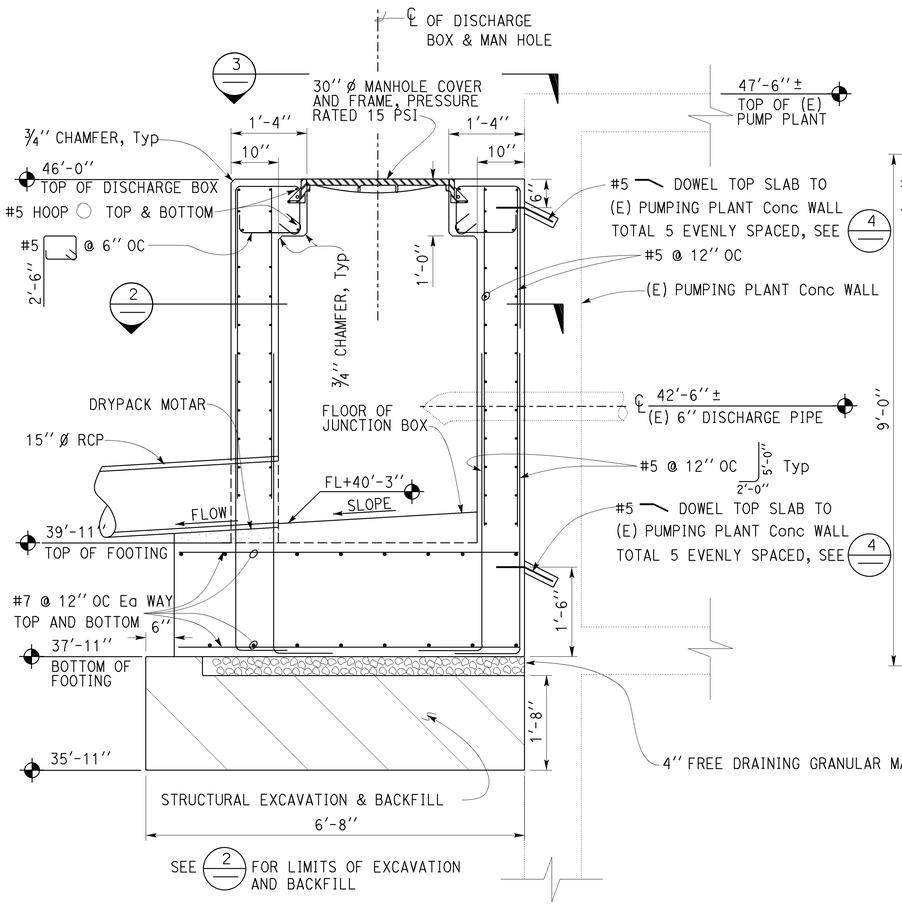

1 DISCHARGE BOX SECTION
¾'' = 1' - 0''

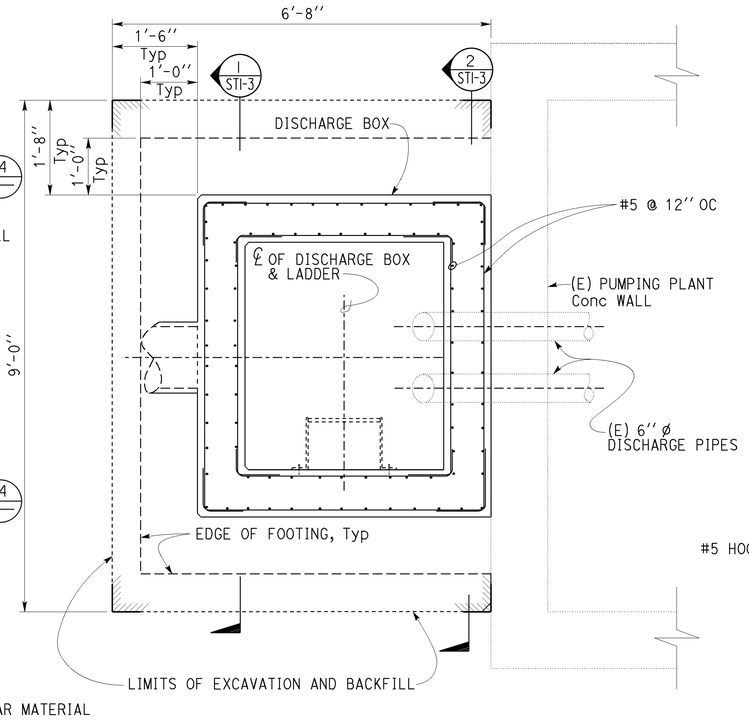

2 EXCAVATION AND BACKFILL PLAN
¾'' = 1' - 0''

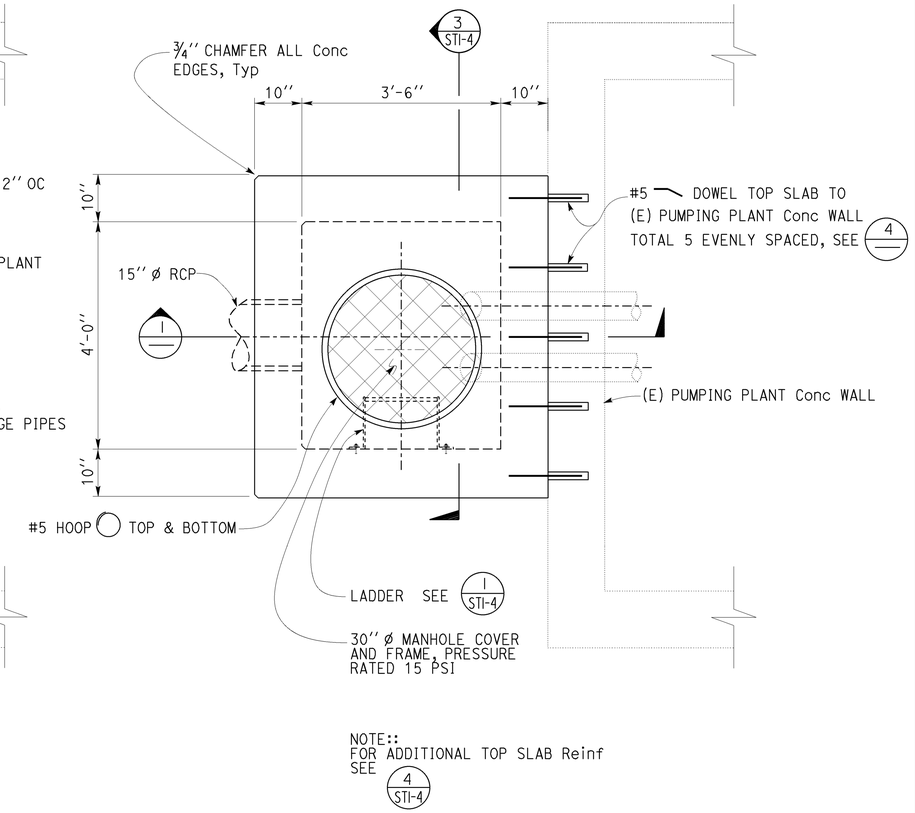

3 DISCHARGE BOX PLAN
¾'' = 1' - 0''

DESIGN	BY Tahir Rashid	CHECKED Thomas Tong	
DETAILS	BY Andrew A. Lovato	CHECKED Tahir Rashid	
QUANTITIES	BY	CHECKED	

STATE OF CALIFORNIA
DEPARTMENT OF TRANSPORTATION

DIVISION OF ENGINEERING SERVICES
ARCHITECTURAL AND STRUCTURAL DESIGN

BRIDGE No. 33-180W
POST MILE 19.3

HACIENDA AVE PUMPING PLANT
DISCHARGE BOX

SHEET ST1-2

TAEMWW Imperial - CCSC Rev. 04/14

ORIGINAL SCALE IN INCHES FOR REDUCED PLANS 0 1 2 3

UNIT: 3581 CONTRACT No.: 04-1SS444
PROJECT NUMBER & PHASE: 04120006031

DISREGARD PRINTS BEARING EARLIER REVISION DATES
REVISION DATES (PRELIMINARY STAGE ONLY) SHEET OF
11-05-14 03-11-15 10-20-15 11-03-15 01-28-16 02-09-16

22-AUG-2016 10:45
P:\1ss44\DRAFTING\FINAL_PS&E\st1_02.dgn

Dist	COUNTY	ROUTE	POST MILES TOTAL PROJECT	SHEET No.	TOTAL SHEETS
04	Ala	880	19.3	24	25

Tahir Rashid 02-05-16
REGISTERED CIVIL ENGINEER DATE

6-27-16
PLANS APPROVAL DATE

REGISTERED PROFESSIONAL ENGINEER Tahir Rashid No. 61932 Exp. 9-30-17 CIVIL STATE OF CALIFORNIA

The State of California or its officers or agents shall not be responsible for the accuracy or completeness of scanned copies of this plan sheet.

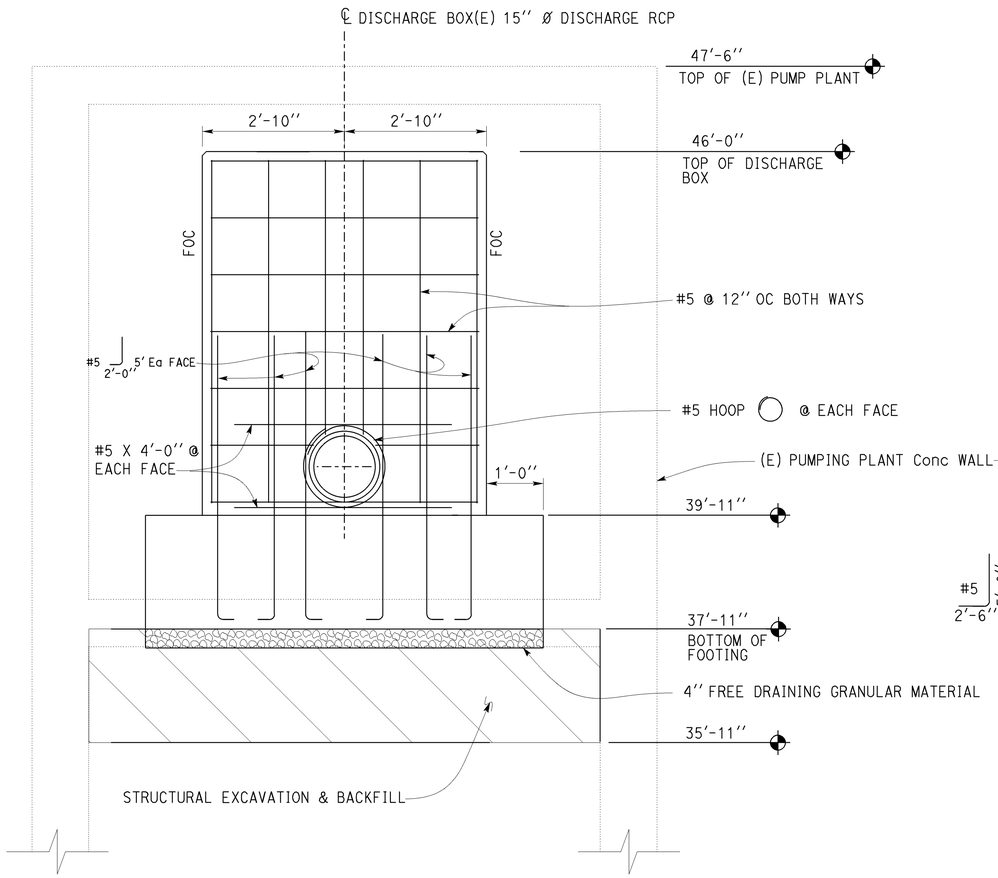

1 **DISCHARGE BOX SECTION**
3/4'' = 1' - 0''

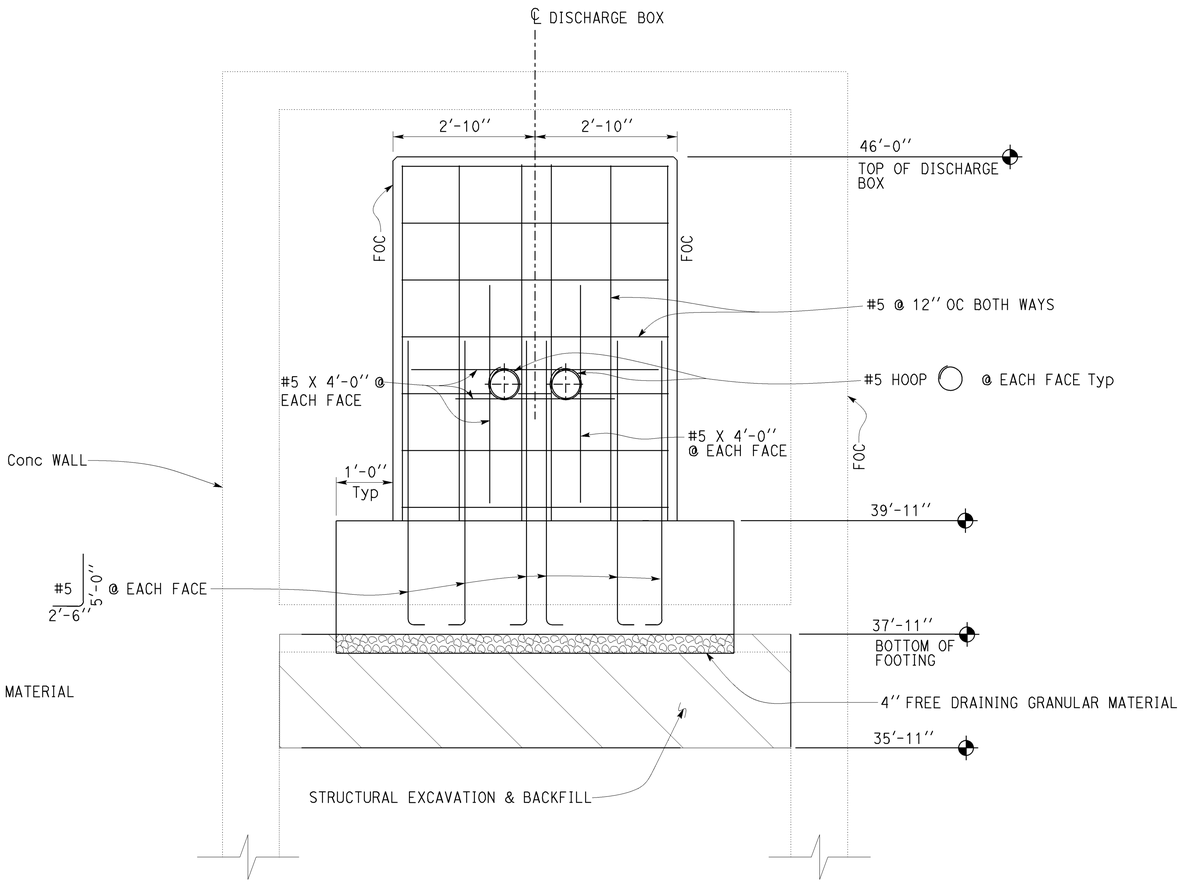

2 **DISCHARGE BOX SECTION**
3/4'' = 1' - 0''

DESIGN	BY Tahir Rashid	CHECKED Thomas Tong	
DETAILS	BY Andrew A. Lovato	CHECKED Tahir Rashid	
QUANTITIES	BY	CHECKED	

STATE OF **CALIFORNIA** DEPARTMENT OF TRANSPORTATION

DIVISION OF ENGINEERING SERVICES
ARCHITECTURAL AND STRUCTURAL DESIGN

BRIDGE No. 33-180W
POST MILE 19.3

HACIENDA AVE PUMPING PLANT
DISCHARGE BOX SECTION

SHEET **ST1-3**

TAEMWW Imperial - CCSC Rev. 04/14

ORIGINAL SCALE IN INCHES FOR REDUCED PLANS 0 1 2 3

UNIT: 3581 CONTRACT No.: 04-1SS444
PROJECT NUMBER & PHASE: 04120006031

DISREGARD PRINTS BEARING EARLIER REVISION DATES → 08-18-15 11-03-15 01-28-16

REVISION DATES (PRELIMINARY STAGE ONLY) SHEET OF

22-AUG-2016 10:46

P:\1ss44\DRAFTING\FINAL_PS&E\st1_03.dgn

Dist	COUNTY	ROUTE	POST MILES TOTAL PROJECT	SHEET No.	TOTAL SHEETS
04	Ala	880	19.3	25	25

REGISTERED CIVIL ENGINEER — DATE 02-05-16

PLANS APPROVAL DATE

REGISTERED PROFESSIONAL ENGINEER — Tahir Rashid — No. 61932 — Exp. 9-30-17 — CIVIL — STATE OF CALIFORNIA

The State of California or its officers or agents shall not be responsible for the accuracy or completeness of scanned copies of this plan sheet.

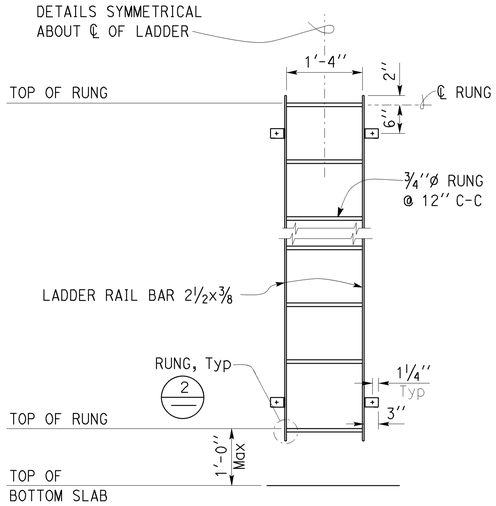

ELEVATION

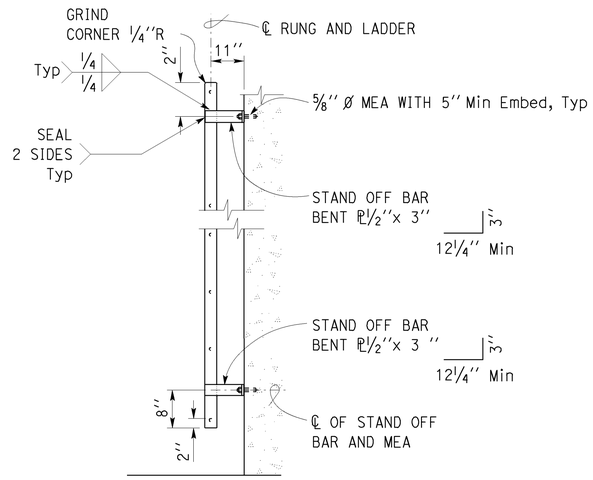

SIDE VIEW

1 LADDER DETAILS
¾" = 1'-0"

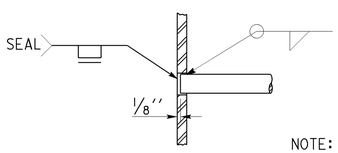

NOTE:
Rung to be placed ⅛" inside of ladder rail.

2 RUNG DETAIL
4" = 1'-0"

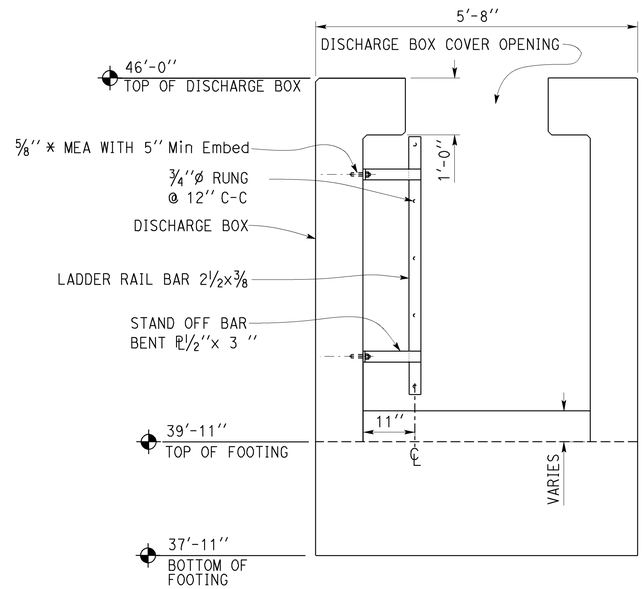

NOTE:
FOR REINFORCEMENT SEE 1 / STI-2

3 LADDER SECTION DETAIL
¾" = 1'-0"

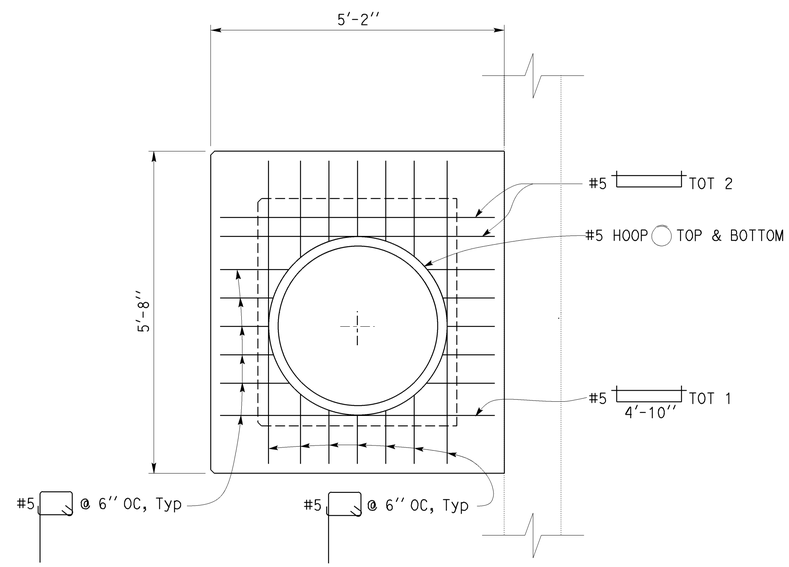

4 DISCHARGE BOX TOP SLAB REINFORCEMENT
¾" = 1'-0"

DESIGN	BY Tahir Rashid	CHECKED Thomas Tong	
DETAILS	BY Andrew A. Lovato	CHECKED Tahir Rashid	
QUANTITIES	BY	CHECKED	

STATE OF CALIFORNIA — DEPARTMENT OF TRANSPORTATION

DIVISION OF ENGINEERING SERVICES — ARCHITECTURAL AND STRUCTURAL DESIGN

BRIDGE No. 33-180W — POST MILE 19.3

HACIENDA AVE PUMPING PLANT

TOP SLAB AND LADDER SECTION / DETAILS

SHEET ST1-4

TAEMWW Imperial - CCSC Rev. 04/14

ORIGINAL SCALE IN INCHES FOR REDUCED PLANS 0 1 2 3

UNIT: 3581 CONTRACT No.: 04-1SS444
PROJECT NUMBER & PHASE: 04120006031

DISREGARD PRINTS BEARING EARLIER REVISION DATES → REVISION DATES (PRELIMINARY STAGE ONLY) 09-03-14 10-29-15 11-03-15 01-28-16 — SHEET OF

22-AUG-2016 10:46

P:\1ss44\DRAFTING\FINAL_PS&E\st1_04.dgn