Dist	COUNTY	ROUTE	POST MILES TOTAL PROJECT	SHEET No.	TOTAL SHEETS
04	SM	82, 92	10.4/10.7, R11.0/R11.4	201	370

REGISTERED ELECTRICAL ENGINEER 2-17-16 DATE

6-28-16
PLANS APPROVAL DATE

REGISTERED PROFESSIONAL ENGINEER
Kenneth Y. Xu
No. 15219
Exp. 6-30-18
ELECTRICAL
STATE OF CALIFORNIA

THE STATE OF CALIFORNIA OR ITS OFFICERS OR AGENTS SHALL NOT BE RESPONSIBLE FOR THE ACCURACY OR COMPLETENESS OF SCANNED COPIES OF THIS PLAN SHEET.

NOTE:

FOR ACCURATE RIGHT OF WAY DATA, CONTACT RIGHT OF WAY ENGINEERING AT THE DISTRICT OFFICE.

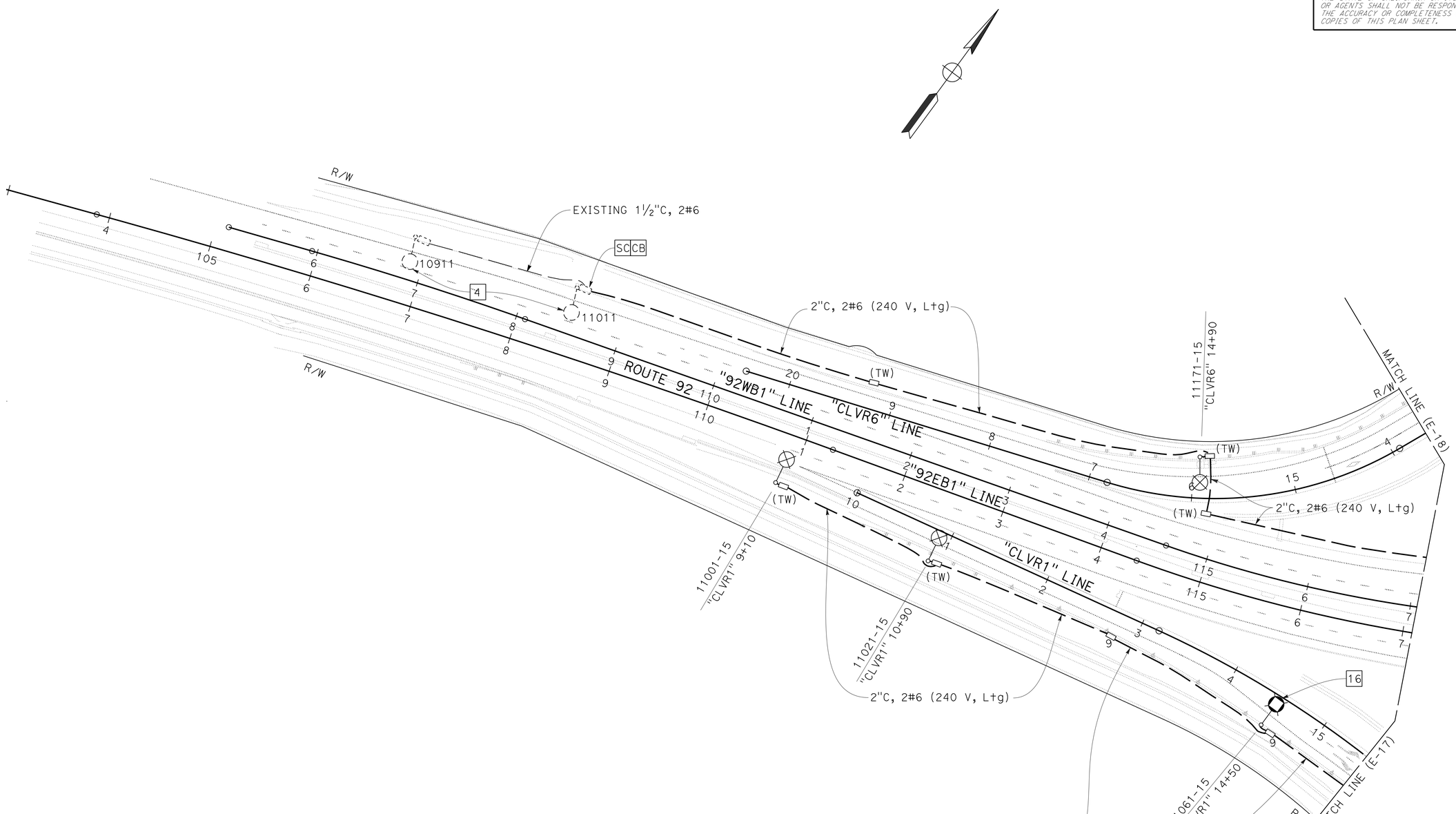

LIGHTING

SCALE: 1" = 50'

APPROVED FOR ELECTRICAL WORK ONLY

FOR NOTES, ABBREVIATIONS AND LEGEND, SEE SHEET E-1

E-16

REVISED BY	DY
DATE REVISED	1-6-16
CALCULATED-DESIGNED BY	DORIS YANG
CHECKED BY	KENNETH Y. XU
FUNCTIONAL SUPERVISOR	BEHZAD GOLEMOHAMMADI

STATE OF CALIFORNIA - DEPARTMENT OF TRANSPORTATION
Caltrans
ELECTRICAL

LAST REVISION 02-09-15
DATE PLOTTED => 15-JUL-2016
TIME PLOTTED => 11:00

Dist	COUNTY	ROUTE	POST MILES TOTAL PROJECT	SHEET No.	TOTAL SHEETS
04	SM	82, 92	10.4/10.7, R11.0/R11.4	202	370

REGISTERED ELECTRICAL ENGINEER 2-17-16 DATE

6-28-16
PLANS APPROVAL DATE

REGISTERED PROFESSIONAL ENGINEER Kenneth Y. Xu No. 15219 Exp. 6-30-18 ELECTRICAL STATE OF CALIFORNIA

THE STATE OF CALIFORNIA OR ITS OFFICERS OR AGENTS SHALL NOT BE RESPONSIBLE FOR THE ACCURACY OR COMPLETENESS OF SCANNED COPIES OF THIS PLAN SHEET.

NOTE:

FOR ACCURATE RIGHT OF WAY DATA, CONTACT RIGHT OF WAY ENGINEERING AT THE DISTRICT OFFICE.

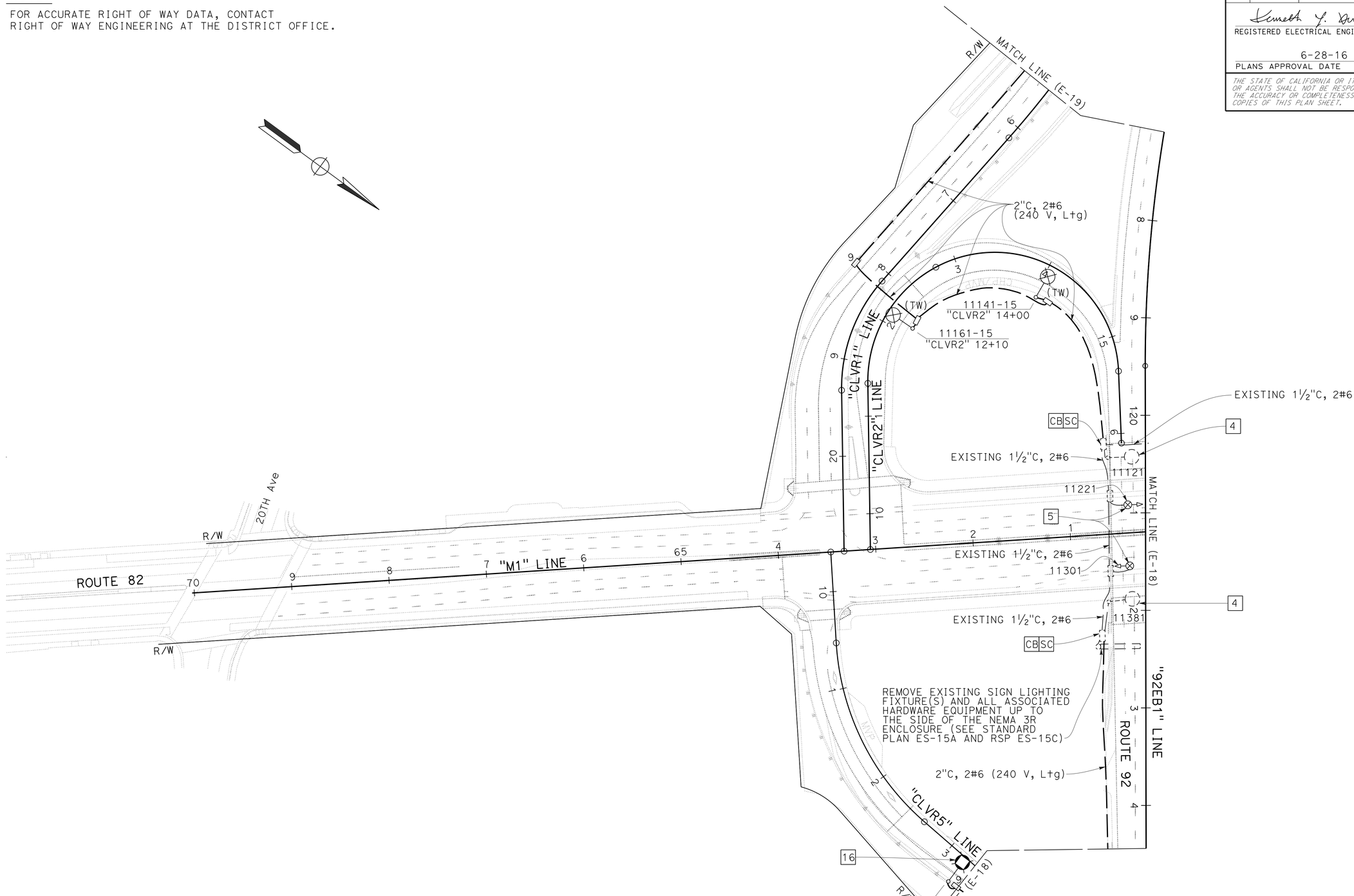

APPROVED FOR ELECTRICAL WORK ONLY

FOR NOTES, ABBREVIATIONS AND LEGEND, SEE SHEET E-1

LIGHTING

SCALE: 1" = 50'

E-17

STATE OF CALIFORNIA - DEPARTMENT OF TRANSPORTATION

Caltrans

ELECTRICAL

FUNCTIONAL SUPERVISOR: BEHZAD GOLEMOHAMMADI

CALCULATED-DESIGNED BY: DORIS YANG

CHECKED BY: KENNETH Y. XU

REVISED BY: DY

DATE REVISED: 1-6-16

LAST REVISION: DATE PLOTTED => 15-JUL-2016 09-21-15 TIME PLOTTED => 11:00

Dist	COUNTY	ROUTE	POST MILES TOTAL PROJECT	SHEET No.	TOTAL SHEETS
04	SM	82, 92	10.4/10.7, R11.0/R11.4	203	370

REGISTERED ELECTRICAL ENGINEER — DATE 2-17-16

6-28-16
PLANS APPROVAL DATE

REGISTERED PROFESSIONAL ENGINEER — Kenneth Y. Xu — No. 15219 — Exp. 6-30-18 — ELECTRICAL — STATE OF CALIFORNIA

THE STATE OF CALIFORNIA OR ITS OFFICERS OR AGENTS SHALL NOT BE RESPONSIBLE FOR THE ACCURACY OR COMPLETENESS OF SCANNED COPIES OF THIS PLAN SHEET.

NOTE:

FOR ACCURATE RIGHT OF WAY DATA, CONTACT RIGHT OF WAY ENGINEERING AT THE DISTRICT OFFICE.

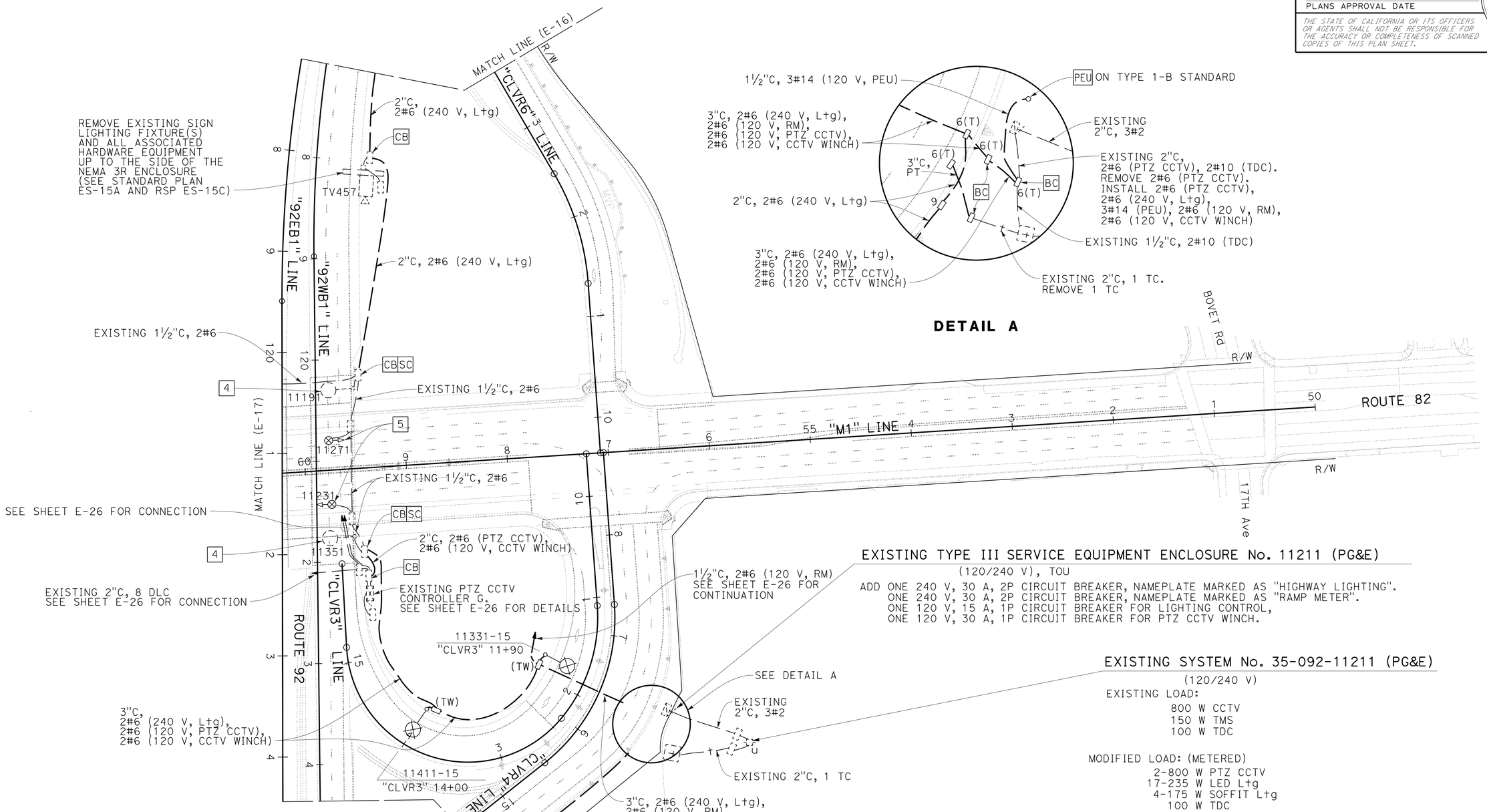

EXISTING TYPE III SERVICE EQUIPMENT ENCLOSURE No. 11211 (PG&E)

(120/240 V), TOU

ADD ONE 240 V, 30 A, 2P CIRCUIT BREAKER, NAMEPLATE MARKED AS "HIGHWAY LIGHTING".
ONE 240 V, 30 A, 2P CIRCUIT BREAKER, NAMEPLATE MARKED AS "RAMP METER".
ONE 120 V, 15 A, 1P CIRCUIT BREAKER FOR LIGHTING CONTROL,
ONE 120 V, 30 A, 1P CIRCUIT BREAKER FOR PTZ CCTV WINCH.

EXISTING SYSTEM No. 35-092-11211 (PG&E)

(120/240 V)

EXISTING LOAD:
800 W CCTV
150 W TMS
100 W TDC

MODIFIED LOAD: (METERED)
2-800 W PTZ CCTV
17-235 W LED Ltg
4-175 W SOFFIT Ltg
100 W TDC

APPROVED FOR ELECTRICAL WORK ONLY

FOR NOTES, ABBREVIATIONS AND LEGEND, SEE SHEET E-1

LIGHTING

SCALE: 1" = 50'

E-18

REVISED BY	DY
DATE REVISED	1-6-16
CALCULATED-DESIGNED BY	DORIS YANG
CHECKED BY	KENNETH Y. XU
FUNCTIONAL SUPERVISOR	BEHZAD GOLEMOHAMMADI

STATE OF CALIFORNIA - DEPARTMENT OF TRANSPORTATION
Caltrans
ELECTRICAL

LAST REVISION 09-21-15 | DATE PLOTTED => 15-JUL-2016 | TIME PLOTTED => 11:00

Dist	COUNTY	ROUTE	POST MILES TOTAL PROJECT	SHEET No.	TOTAL SHEETS
04	SM	82, 92	10.4/10.7, R11.0/R11.4	204	370

REGISTERED ELECTRICAL ENGINEER 2-17-16 DATE

6-28-16
PLANS APPROVAL DATE

REGISTERED PROFESSIONAL ENGINEER Kenneth Y. Xu No. 15219 Exp. 6-30-18 ELECTRICAL STATE OF CALIFORNIA

THE STATE OF CALIFORNIA OR ITS OFFICERS OR AGENTS SHALL NOT BE RESPONSIBLE FOR THE ACCURACY OR COMPLETENESS OF SCANNED COPIES OF THIS PLAN SHEET.

NOTE:

FOR ACCURATE RIGHT OF WAY DATA, CONTACT RIGHT OF WAY ENGINEERING AT THE DISTRICT OFFICE.

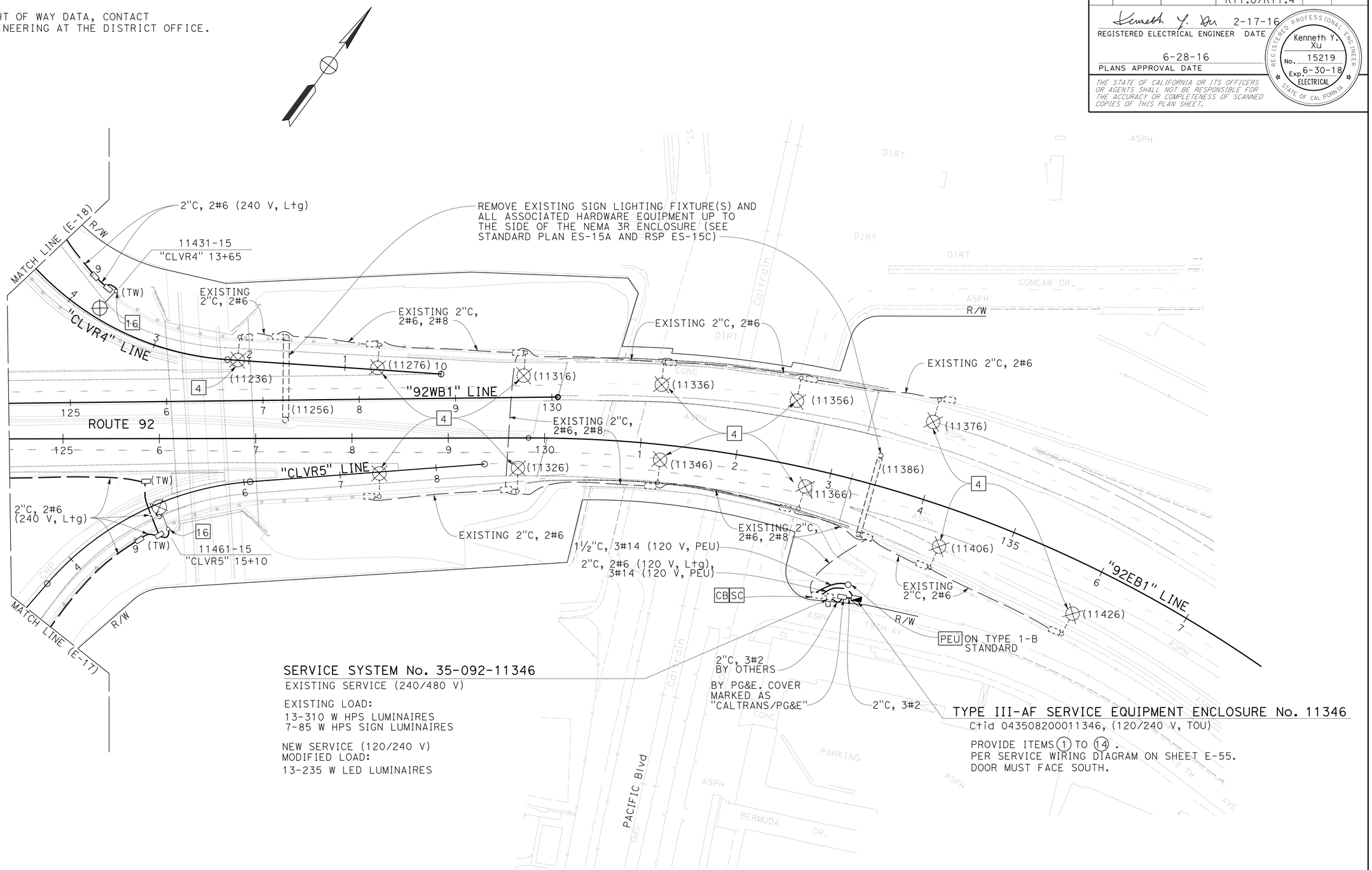

SERVICE SYSTEM No. 35-092-11346

EXISTING SERVICE (240/480 V)

EXISTING LOAD:
13-310 W HPS LUMINAIRES
7-85 W HPS SIGN LUMINAIRES

NEW SERVICE (120/240 V)
MODIFIED LOAD:
13-235 W LED LUMINAIRES

TYPE III-AF SERVICE EQUIPMENT ENCLOSURE No. 11346

Ctid 043508200011346, (120/240 V, TOU)

PROVIDE ITEMS (1) TO (14) .
PER SERVICE WIRING DIAGRAM ON SHEET E-55.
DOOR MUST FACE SOUTH.

LIGHTING

SCALE: 1" = 50'

APPROVED FOR ELECTRICAL WORK ONLY

FOR NOTES, ABBREVIATIONS AND LEGEND, SEE SHEET E-1

E-19

REVISED BY	DY
DATE REVISED	1-6-16
CALCULATED-DESIGNED BY	DORIS YANG
CHECKED BY	KENNETH Y. XU
FUNCTIONAL SUPERVISOR	BEHZAD GOLEMOHAMMADI

STATE OF CALIFORNIA - DEPARTMENT OF TRANSPORTATION

Caltrans

ELECTRICAL

LAST REVISION 09-21-15 | DATE PLOTTED => 15-JUL-2016 | TIME PLOTTED => 11:00

Dist	COUNTY	ROUTE	POST MILES TOTAL PROJECT	SHEET No.	TOTAL SHEETS
04	SM	82, 92	10.4/10.7, R11.0/R11.4	205	370

REGISTERED ELECTRICAL ENGINEER — DATE: 2-17-16

PLANS APPROVAL DATE: 6-28-16

REGISTERED PROFESSIONAL ENGINEER — Kenneth Y. Xu — No. 15219 — Exp. 6-30-18 — ELECTRICAL — STATE OF CALIFORNIA

THE STATE OF CALIFORNIA OR ITS OFFICERS OR AGENTS SHALL NOT BE RESPONSIBLE FOR THE ACCURACY OR COMPLETENESS OF SCANNED COPIES OF THIS PLAN SHEET.

NOTE:

FOR ACCURATE RIGHT OF WAY DATA, CONTACT RIGHT OF WAY ENGINEERING AT THE DISTRICT OFFICE.

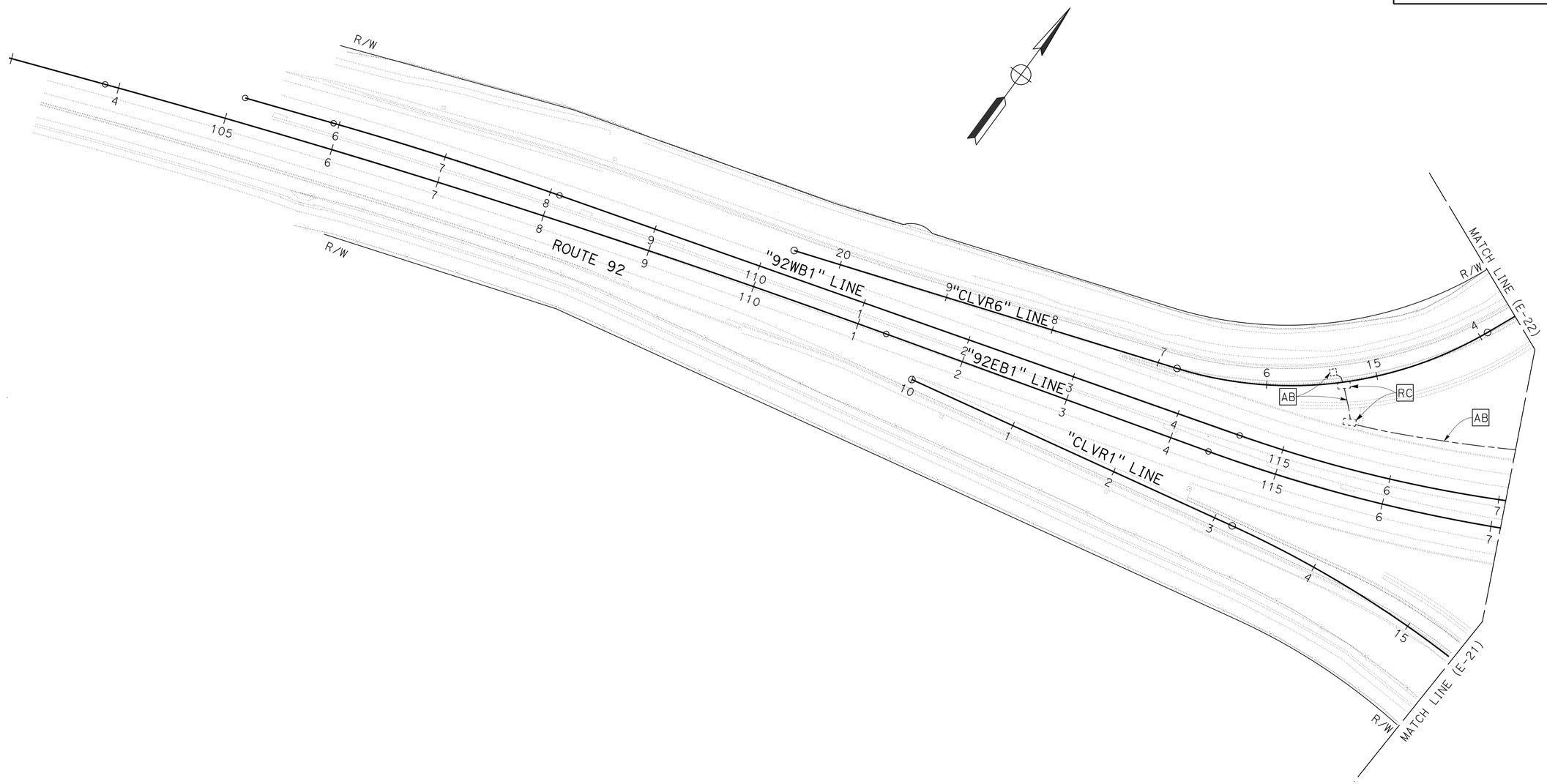

EXISTING

RAMP METERING SYSTEM

SCALE: 1" = 50'

APPROVED FOR ELECTRICAL WORK ONLY

FOR NOTES, ABBREVIATIONS AND LEGEND, SEE SHEET E-1

E-20

REVISED BY	DY
DATE REVISED	1-6-16
DORIS YANG	KENNETH Y. XU
CALCULATED-DESIGNED BY	
CHECKED BY	
FUNCTIONAL SUPERVISOR	BEHZAD GOLEMOHAMMADI

STATE OF CALIFORNIA - DEPARTMENT OF TRANSPORTATION

Caltrans

ELECTRICAL

LAST REVISION 09-21-15 | DATE PLOTTED => 15-JUL-2016 | TIME PLOTTED => 11:00

Dist	COUNTY	ROUTE	POST MILES TOTAL PROJECT	SHEET No.	TOTAL SHEETS
04	SM	82, 92	10.4/10.7, R11.0/R11.4	206	370

REGISTERED ELECTRICAL ENGINEER 2-17-16 DATE

6-28-16
PLANS APPROVAL DATE

REGISTERED PROFESSIONAL ENGINEER Kenneth Y. Xu No. 15219 Exp. 6-30-18 ELECTRICAL STATE OF CALIFORNIA

THE STATE OF CALIFORNIA OR ITS OFFICERS OR AGENTS SHALL NOT BE RESPONSIBLE FOR THE ACCURACY OR COMPLETENESS OF SCANNED COPIES OF THIS PLAN SHEET.

NOTE:

FOR ACCURATE RIGHT OF WAY DATA, CONTACT RIGHT OF WAY ENGINEERING AT THE DISTRICT OFFICE.

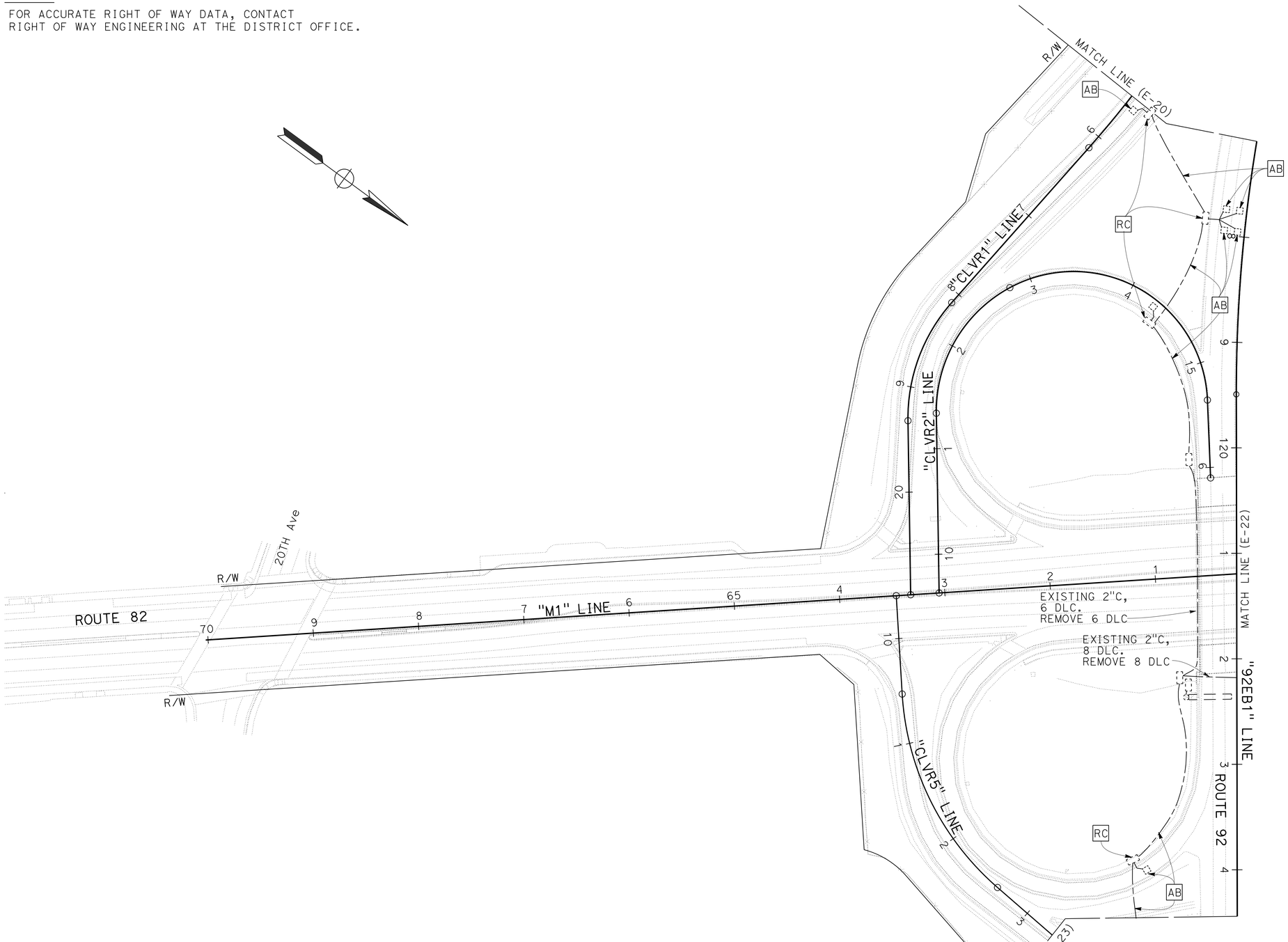

EXISTING

RAMP METERING SYSTEM

SCALE: 1" = 50'

FOR NOTES, ABBREVIATIONS AND LEGEND, SEE SHEET E-1

APPROVED FOR ELECTRICAL WORK ONLY

E-21

REVISED BY	DY
DATE REVISED	1-6-16
CALCULATED-DESIGNED BY	DORIS YANG
CHECKED BY	KENNETH Y. XU
FUNCTIONAL SUPERVISOR	BEHZAD GOLEMOHAMMADI

STATE OF CALIFORNIA - DEPARTMENT OF TRANSPORTATION

Caltrans

ELECTRICAL

LAST REVISION 09-21-15 | DATE PLOTTED => 15-JUL-2016 | TIME PLOTTED => 11:00

Dist	COUNTY	ROUTE	POST MILES TOTAL PROJECT	SHEET No.	TOTAL SHEETS
04	SM	82, 92	10.4/10.7, R11.0/R11.4	207	370

REGISTERED ELECTRICAL ENGINEER 2-17-16 DATE

6-28-16
PLANS APPROVAL DATE

REGISTERED PROFESSIONAL ENGINEER Kenneth Y. Xu No. 15219 Exp. 6-30-18 ELECTRICAL STATE OF CALIFORNIA

THE STATE OF CALIFORNIA OR ITS OFFICERS OR AGENTS SHALL NOT BE RESPONSIBLE FOR THE ACCURACY OR COMPLETENESS OF SCANNED COPIES OF THIS PLAN SHEET.

NOTE:

FOR ACCURATE RIGHT OF WAY DATA, CONTACT RIGHT OF WAY ENGINEERING AT THE DISTRICT OFFICE.

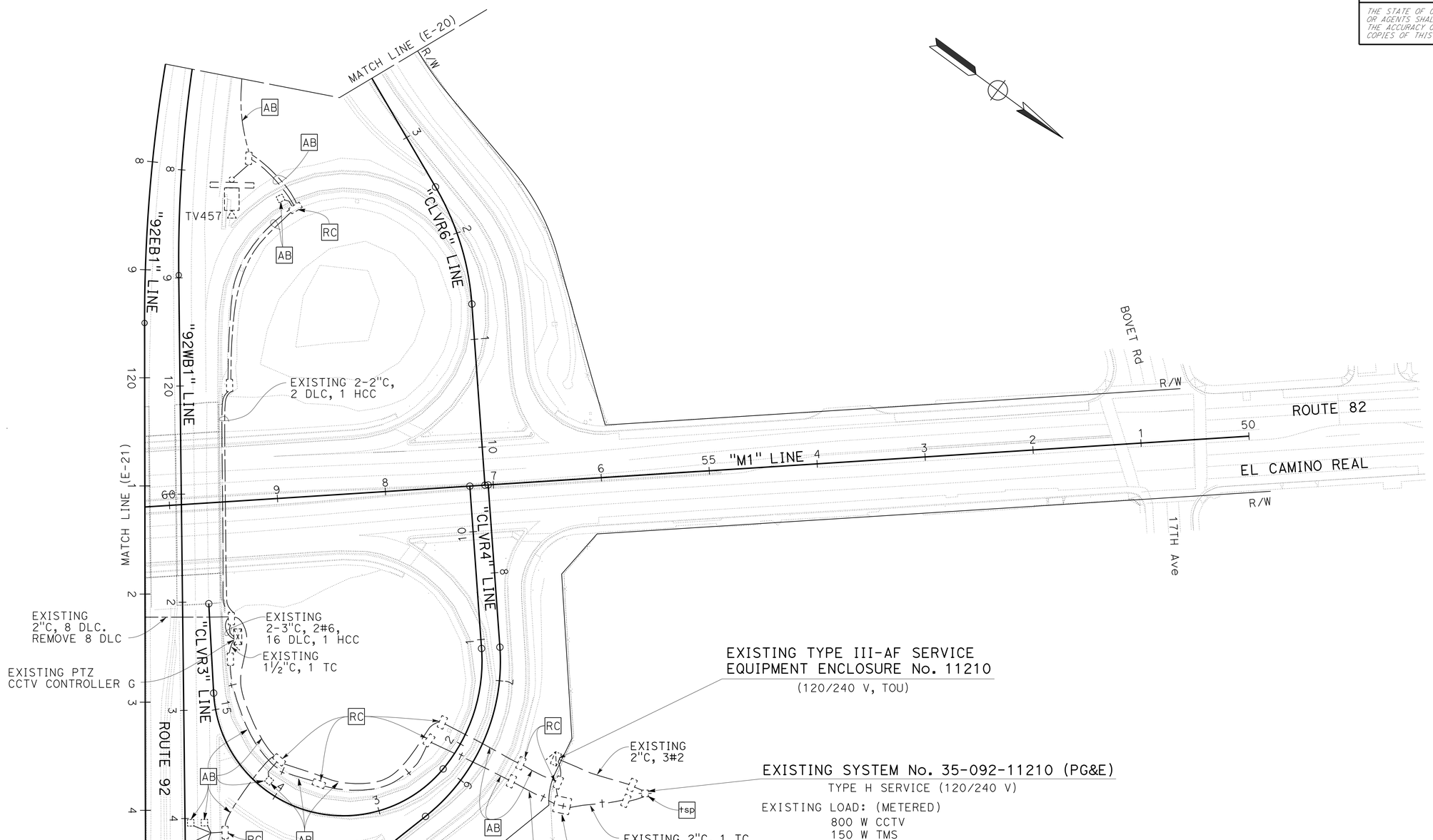

EXISTING

RAMP METERING SYSTEM

SCALE: 1" = 50'

APPROVED FOR ELECTRICAL WORK ONLY

FOR NOTES, ABBREVIATIONS AND LEGEND, SEE SHEET E-1

E-22

REVISED BY	DY
DATE REVISED	1-6-16
CALCULATED-DESIGNED BY	DORIS YANG
CHECKED BY	KENNETH Y. XU
FUNCTIONAL SUPERVISOR	BEHZAD GOLEMOHAMMADI

STATE OF CALIFORNIA - DEPARTMENT OF TRANSPORTATION

ELECTRICAL

Caltrans

LAST REVISION 09-21-15 | DATE PLOTTED => 15-JUL-2016 | TIME PLOTTED => 11:00

Dist	COUNTY	ROUTE	POST MILES TOTAL PROJECT	SHEET No.	TOTAL SHEETS
04	SM	82, 92	10.4/10.7, R11.0/R11.4	208	370

REGISTERED ELECTRICAL ENGINEER 2-17-16 DATE

6-28-16
PLANS APPROVAL DATE

REGISTERED PROFESSIONAL ENGINEER Kenneth Y. Xu No. 15219 Exp. 6-30-18 ELECTRICAL STATE OF CALIFORNIA

THE STATE OF CALIFORNIA OR ITS OFFICERS OR AGENTS SHALL NOT BE RESPONSIBLE FOR THE ACCURACY OR COMPLETENESS OF SCANNED COPIES OF THIS PLAN SHEET.

NOTE:

FOR ACCURATE RIGHT OF WAY DATA, CONTACT RIGHT OF WAY ENGINEERING AT THE DISTRICT OFFICE.

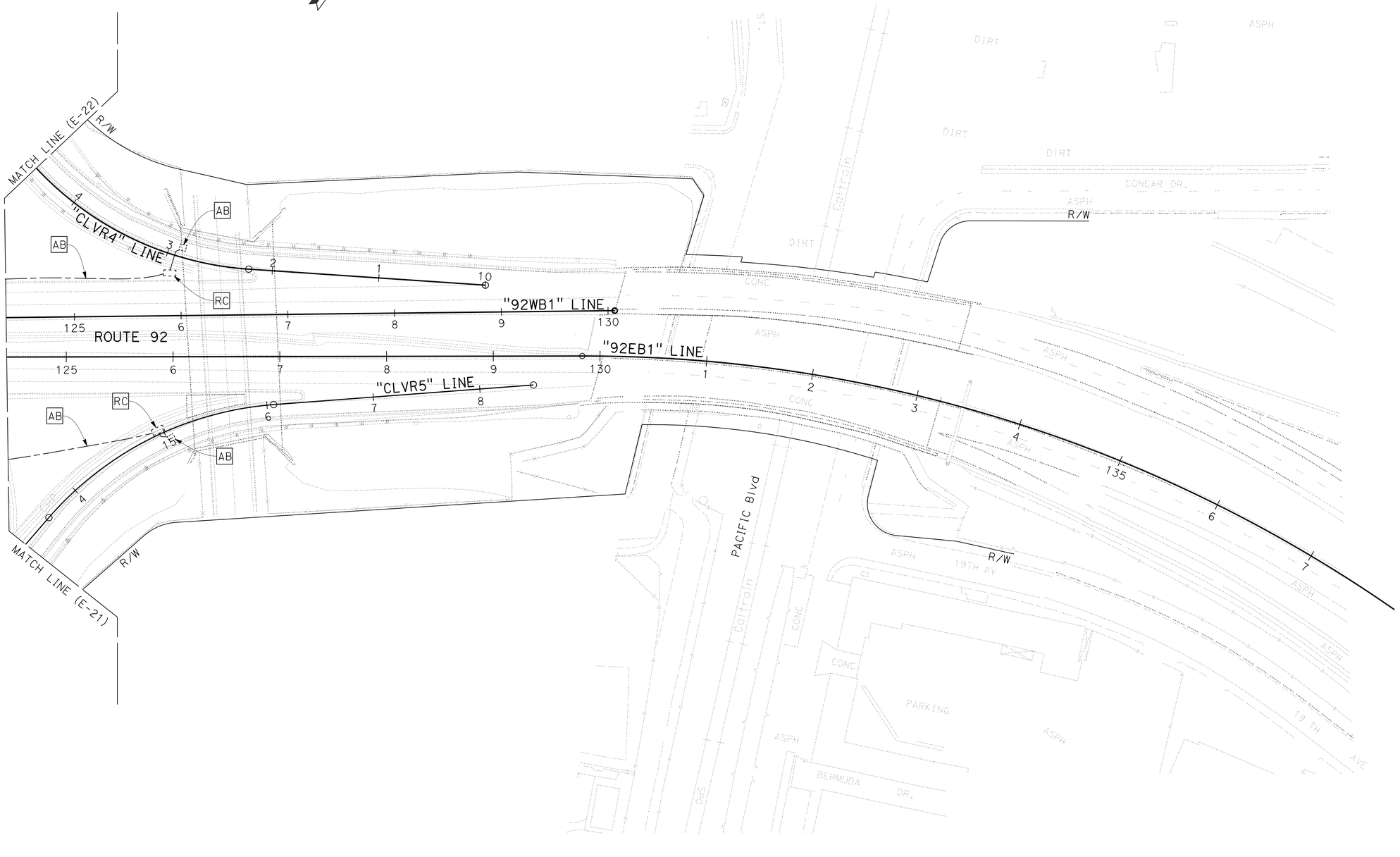

EXISTING

RAMP METERING SYSTEM

SCALE: 1" = 50'

APPROVED FOR ELECTRICAL WORK ONLY

FOR NOTES, ABBREVIATIONS AND LEGEND, SEE SHEET E-1

E-23

DORIS YANG	REVISED BY
KENNETH Y. XU	DATE REVISED
	DY
	1-6-16
CALCULATED-DESIGNED BY	
CHECKED BY	
FUNCTIONAL SUPERVISOR	
BEHZAD GOLEMOHAMMADI	

STATE OF CALIFORNIA - DEPARTMENT OF TRANSPORTATION

Caltrans

ELECTRICAL

LAST REVISION 09-21-15 DATE PLOTTED => 15-JUL-2016 TIME PLOTTED => 11:00

Dist	COUNTY	ROUTE	POST MILES TOTAL PROJECT	SHEET No.	TOTAL SHEETS
04	SM	82, 92	10.4/10.7, R11.0/R11.4	209	370

REGISTERED ELECTRICAL ENGINEER 2-17-16 DATE

6-28-16
PLANS APPROVAL DATE

REGISTERED PROFESSIONAL ENGINEER Kenneth Y. Xu No. 15219 Exp. 6-30-18 ELECTRICAL STATE OF CALIFORNIA

THE STATE OF CALIFORNIA OR ITS OFFICERS OR AGENTS SHALL NOT BE RESPONSIBLE FOR THE ACCURACY OR COMPLETENESS OF SCANNED COPIES OF THIS PLAN SHEET.

NOTE:

FOR ACCURATE RIGHT OF WAY DATA, CONTACT RIGHT OF WAY ENGINEERING AT THE DISTRICT OFFICE.

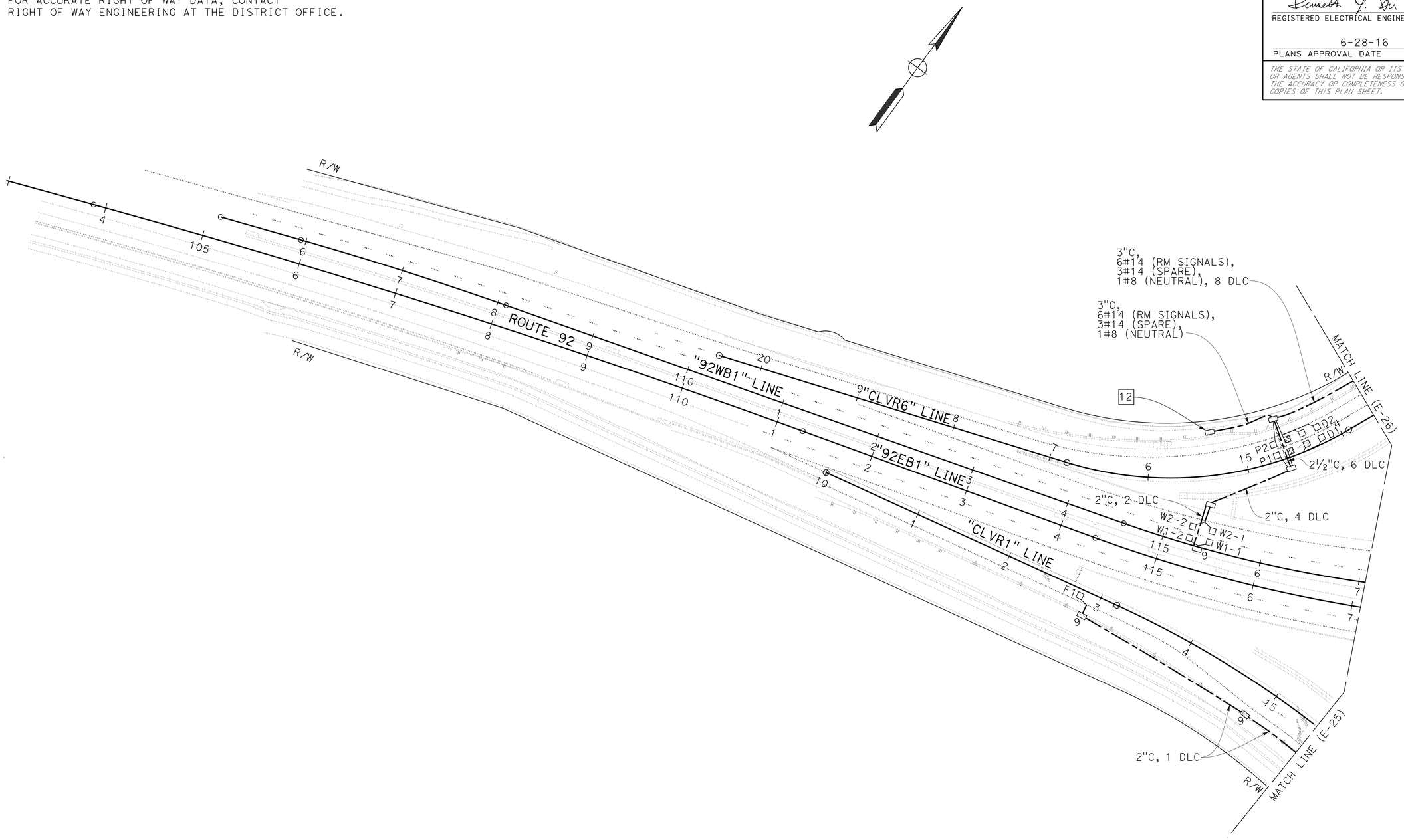

RAMP METERING SYSTEM

SCALE: 1" = 50'

APPROVED FOR ELECTRICAL WORK ONLY

FOR NOTES, ABBREVIATIONS AND LEGEND, SEE SHEET E-1

E-24

CALCULATED-DESIGNED BY	DORIS YANG
CHECKED BY	KENNETH Y. XU
REVISED BY	DY
DATE REVISED	1-6-16
FUNCTIONAL SUPERVISOR	BEHZAD GOLEMOHAMMADI

STATE OF CALIFORNIA - DEPARTMENT OF TRANSPORTATION
Caltrans
ELECTRICAL

LAST REVISION 09-21-15
DATE PLOTTED => 15-JUL-2016
TIME PLOTTED => 11:00

Dist	COUNTY	ROUTE	POST MILES TOTAL PROJECT	SHEET No.	TOTAL SHEETS
04	SM	82, 92	10.4/10.7, R11.0/R11.4	210	370

REGISTERED ELECTRICAL ENGINEER — DATE 2-17-16

6-28-16
PLANS APPROVAL DATE

REGISTERED PROFESSIONAL ENGINEER — Kenneth Y. Xu — No. 15219 — Exp. 6-30-18 — ELECTRICAL — STATE OF CALIFORNIA

THE STATE OF CALIFORNIA OR ITS OFFICERS OR AGENTS SHALL NOT BE RESPONSIBLE FOR THE ACCURACY OR COMPLETENESS OF SCANNED COPIES OF THIS PLAN SHEET.

NOTE:

FOR ACCURATE RIGHT OF WAY DATA, CONTACT RIGHT OF WAY ENGINEERING AT THE DISTRICT OFFICE.

DETAIL A
LOOP DETECTOR DETAIL
NO SCALE

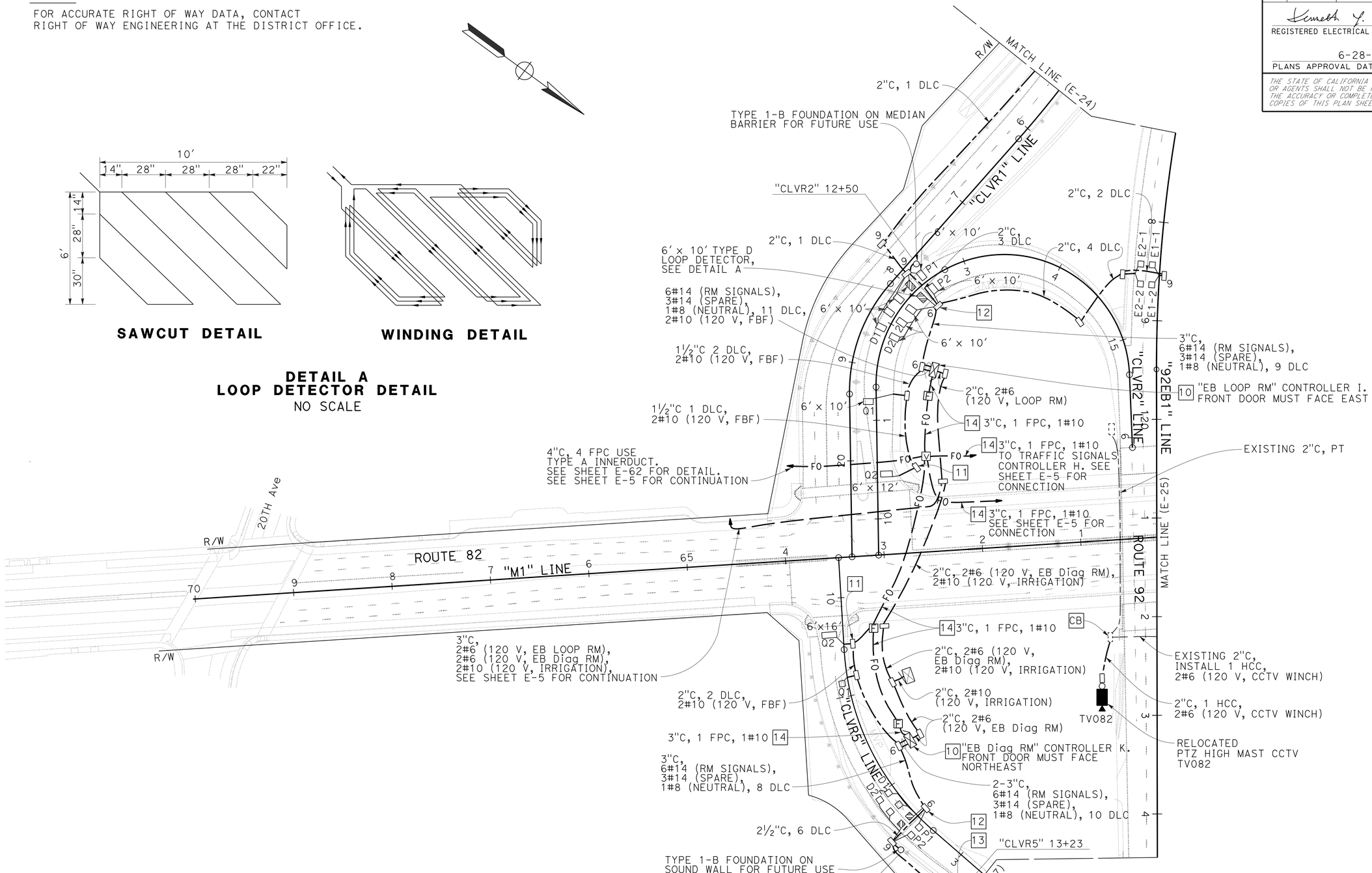

RAMP METERING SYSTEM

SCALE: 1" = 50′

FOR NOTES, ABBREVIATIONS AND LEGEND, SEE SHEET E-1

APPROVED FOR ELECTRICAL WORK ONLY

E-25

CALCULATED-DESIGNED BY	DORIS YANG
CHECKED BY	KENNETH Y. XU
REVISED BY	DY
DATE REVISED	1-6-16
FUNCTIONAL SUPERVISOR	BEHZAD GOLEMOHAMMADI

STATE OF CALIFORNIA - DEPARTMENT OF TRANSPORTATION
Caltrans
ELECTRICAL

LAST REVISION 09-21-15 | DATE PLOTTED => 15-JUL-2016 | TIME PLOTTED => 11:00

Dist	COUNTY	ROUTE	POST MILES TOTAL PROJECT	SHEET No.	TOTAL SHEETS
04	SM	82, 92	10.4/10.7, R11.0/R11.4	211	370

REGISTERED ELECTRICAL ENGINEER 2-17-16 DATE

6-28-16
PLANS APPROVAL DATE

REGISTERED PROFESSIONAL ENGINEER Kenneth Y. Xu No. 15219 Exp. 6-30-18 ELECTRICAL STATE OF CALIFORNIA

THE STATE OF CALIFORNIA OR ITS OFFICERS OR AGENTS SHALL NOT BE RESPONSIBLE FOR THE ACCURACY OR COMPLETENESS OF SCANNED COPIES OF THIS PLAN SHEET.

NOTE:

FOR ACCURATE RIGHT OF WAY DATA, CONTACT RIGHT OF WAY ENGINEERING AT THE DISTRICT OFFICE.

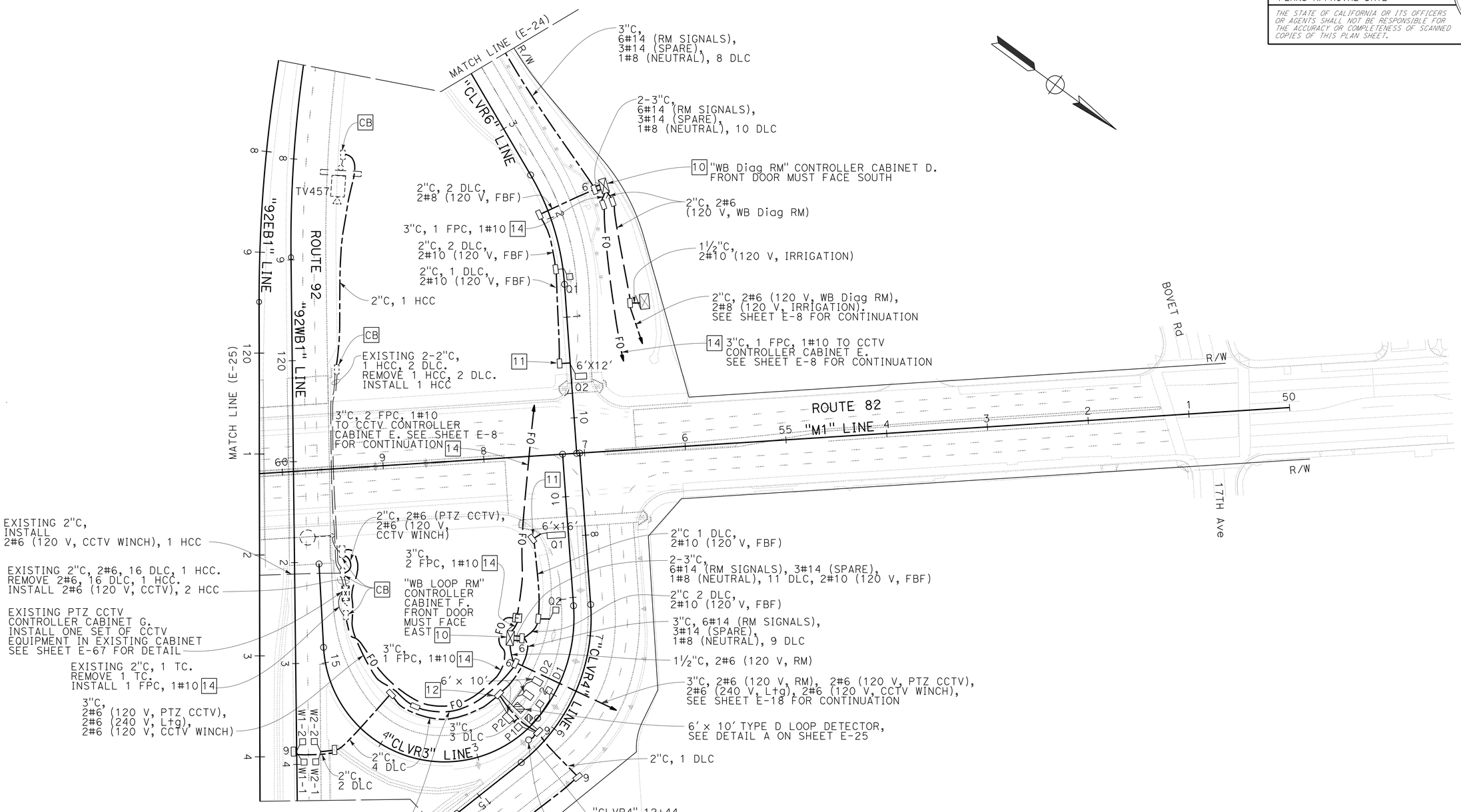

RAMP METERING SYSTEM

SCALE: 1" = 50'

APPROVED FOR ELECTRICAL WORK ONLY

FOR NOTES, ABBREVIATIONS AND LEGEND, SEE SHEET E-1

E-26

CALCULATED-DESIGNED BY	DORIS YANG
CHECKED BY	KENNETH Y. XU
FUNCTIONAL SUPERVISOR	BEHZAD GOLEMOHAMMADI
REVISED BY	DY
DATE REVISED	1-6-16

STATE OF CALIFORNIA - DEPARTMENT OF TRANSPORTATION

Caltrans®

ELECTRICAL

LAST REVISION 09-21-15 | DATE PLOTTED => 15-JUL-2016 | TIME PLOTTED => 11:00

Dist	COUNTY	ROUTE	POST MILES TOTAL PROJECT	SHEET No.	TOTAL SHEETS
04	SM	82, 92	10.4/10.7, R11.0/R11.4	212	370

REGISTERED ELECTRICAL ENGINEER 2-17-16 DATE

6-28-16
PLANS APPROVAL DATE

REGISTERED PROFESSIONAL ENGINEER Kenneth Y. Xu No. 15219 Exp. 6-30-18 ELECTRICAL STATE OF CALIFORNIA

THE STATE OF CALIFORNIA OR ITS OFFICERS OR AGENTS SHALL NOT BE RESPONSIBLE FOR THE ACCURACY OR COMPLETENESS OF SCANNED COPIES OF THIS PLAN SHEET.

NOTE:

FOR ACCURATE RIGHT OF WAY DATA, CONTACT RIGHT OF WAY ENGINEERING AT THE DISTRICT OFFICE.

RAMP METERING SYSTEM

SCALE: 1" = 50'

APPROVED FOR ELECTRICAL WORK ONLY

FOR NOTES, ABBREVIATIONS AND LEGEND, SEE SHEET E-1

E-27

STATE OF CALIFORNIA - DEPARTMENT OF TRANSPORTATION

Caltrans

ELECTRICAL

FUNCTIONAL SUPERVISOR: BEHZAD GOLEMOHAMMADI

CALCULATED-DESIGNED BY: DORIS YANG

CHECKED BY: KENNETH Y. XU

REVISED BY: DY

DATE REVISED: 1-6-16

LAST REVISION 09-21-15

DATE PLOTTED => 15-JUL-2016
TIME PLOTTED => 11:00

Dist	COUNTY	ROUTE	POST MILES TOTAL PROJECT	SHEET No.	TOTAL SHEETS
04	SM	82, 92	10.4/10.7, R11.0/R11.4	213	370

REGISTERED ELECTRICAL ENGINEER — DATE: 2-17-16

6-28-16
PLANS APPROVAL DATE

REGISTERED PROFESSIONAL ENGINEER — Kenneth Y. Xu — No. 15219 — Exp. 6-30-18 — ELECTRICAL — STATE OF CALIFORNIA

THE STATE OF CALIFORNIA OR ITS OFFICERS OR AGENTS SHALL NOT BE RESPONSIBLE FOR THE ACCURACY OR COMPLETENESS OF SCANNED COPIES OF THIS PLAN SHEET.

NOTE:

FOR ACCURATE RIGHT OF WAY DATA, CONTACT RIGHT OF WAY ENGINEERING AT THE DISTRICT OFFICE.

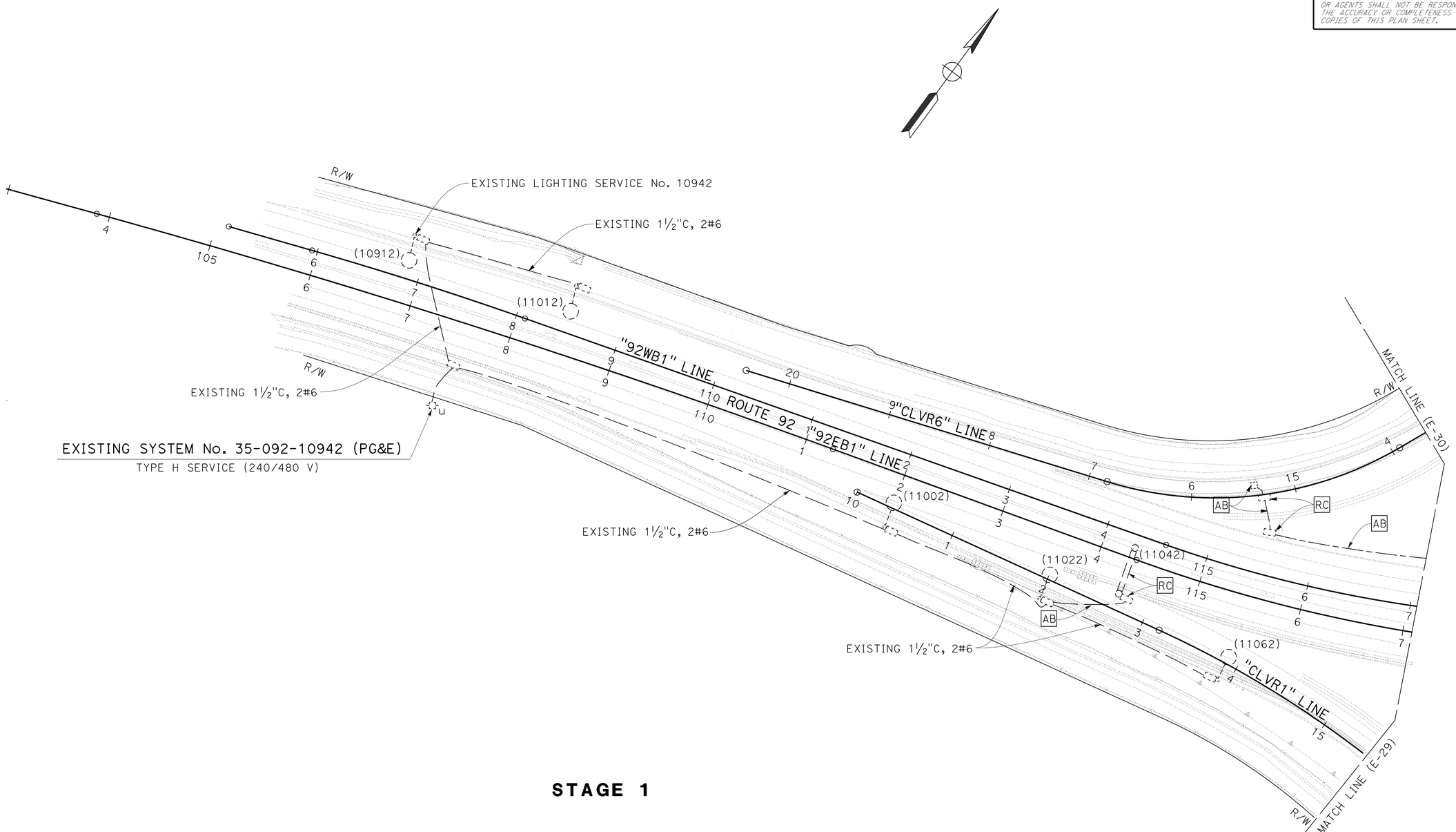

STAGE 1

LIGHTING
(STAGE CONSTRUCTION)

SCALE: 1" = 50'

APPROVED FOR ELECTRICAL WORK ONLY

FOR NOTES, ABBREVIATIONS AND LEGEND, SEE SHEET E-1

E-28

STATE OF CALIFORNIA - DEPARTMENT OF TRANSPORTATION
Caltrans
ELECTRICAL

FUNCTIONAL SUPERVISOR: BEHZAD GOLEMOHAMMADI
CALCULATED-DESIGNED BY: DORIS YANG
CHECKED BY: KENNETH Y. XU
REVISED BY: DY
DATE REVISED: 1-6-16

LAST REVISION — DATE PLOTTED => 15-JUL-2016 — TIME PLOTTED => 11:00 — 09-22-15

Dist	COUNTY	ROUTE	POST MILES TOTAL PROJECT	SHEET No.	TOTAL SHEETS
04	SM	82, 92	10.4/10.7, R11.0/R11.4	214	370

REGISTERED ELECTRICAL ENGINEER 2-17-16 DATE

6-28-16
PLANS APPROVAL DATE

REGISTERED PROFESSIONAL ENGINEER Kenneth Y. Xu No. 15219 Exp. 6-30-18 ELECTRICAL STATE OF CALIFORNIA

THE STATE OF CALIFORNIA OR ITS OFFICERS OR AGENTS SHALL NOT BE RESPONSIBLE FOR THE ACCURACY OR COMPLETENESS OF SCANNED COPIES OF THIS PLAN SHEET.

NOTE:

FOR ACCURATE RIGHT OF WAY DATA, CONTACT RIGHT OF WAY ENGINEERING AT THE DISTRICT OFFICE.

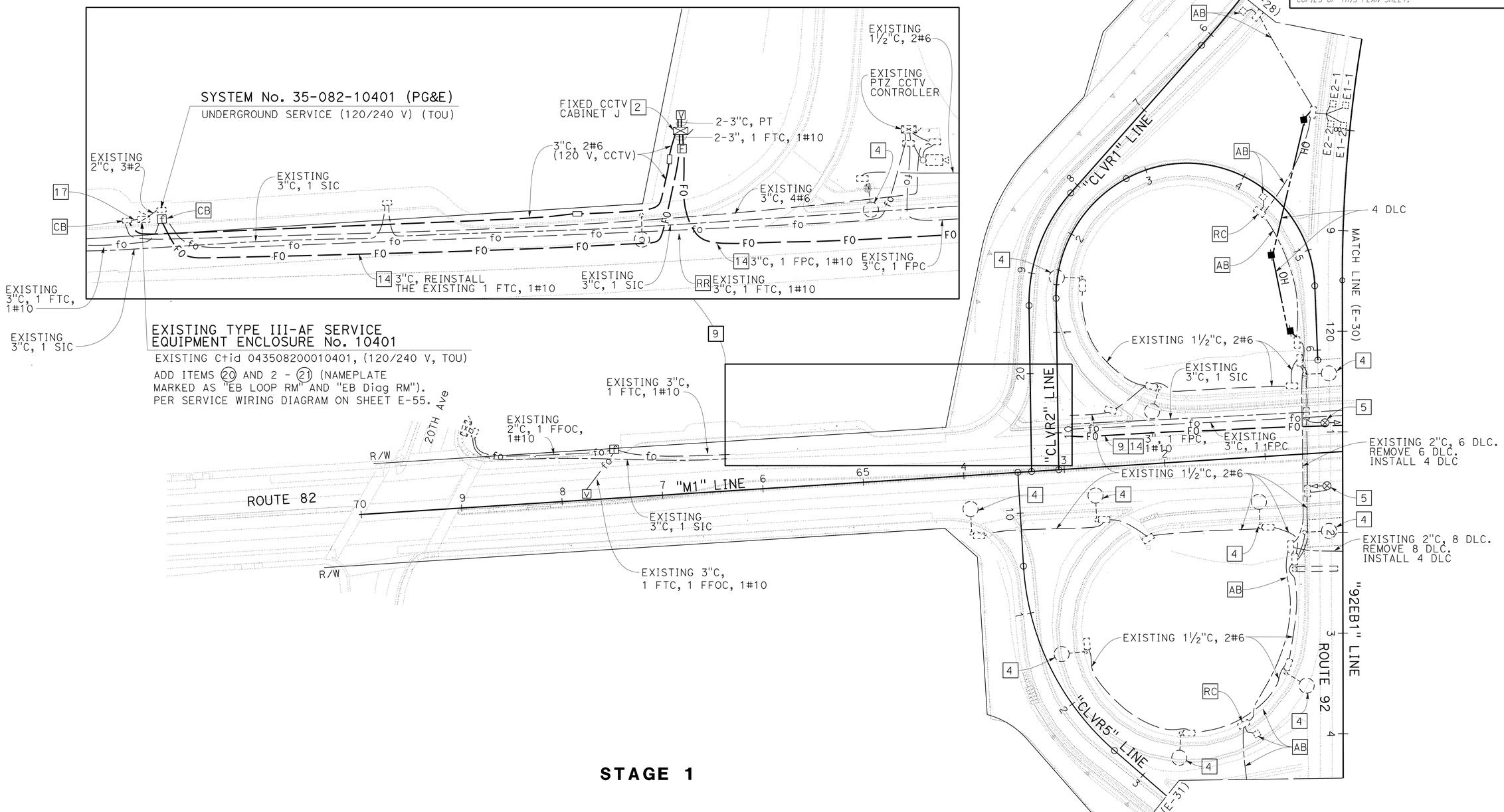

STAGE 1

APPROVED FOR ELECTRICAL WORK ONLY

FOR NOTES, ABBREVIATIONS AND LEGEND, SEE SHEET E-1

LIGHTING
(STAGE CONSTRUCTION)

SCALE: 1" = 50'

E-29

DY	1-6-16
REVISED BY	DATE REVISED
DORIS YANG	KENNETH Y. XU
CALCULATED-DESIGNED BY	CHECKED BY
FUNCTIONAL SUPERVISOR	BEHZAD GOLEMOHAMMADI

STATE OF CALIFORNIA - DEPARTMENT OF TRANSPORTATION
Caltrans
ELECTRICAL

LAST REVISION 01-07-16 DATE PLOTTED => 15-JUL-2016 TIME PLOTTED => 11:00

Dist	COUNTY	ROUTE	POST MILES TOTAL PROJECT	SHEET No.	TOTAL SHEETS
04	SM	82, 92	10.4/10.7, R11.0/R11.4	215	370

REGISTERED ELECTRICAL ENGINEER 2-17-16 DATE

6-28-16
PLANS APPROVAL DATE

REGISTERED PROFESSIONAL ENGINEER Kenneth Y. Xu No. 15219 Exp. 6-30-18 ELECTRICAL STATE OF CALIFORNIA

THE STATE OF CALIFORNIA OR ITS OFFICERS OR AGENTS SHALL NOT BE RESPONSIBLE FOR THE ACCURACY OR COMPLETENESS OF SCANNED COPIES OF THIS PLAN SHEET.

NOTE:

FOR ACCURATE RIGHT OF WAY DATA, CONTACT RIGHT OF WAY ENGINEERING AT THE DISTRICT OFFICE.

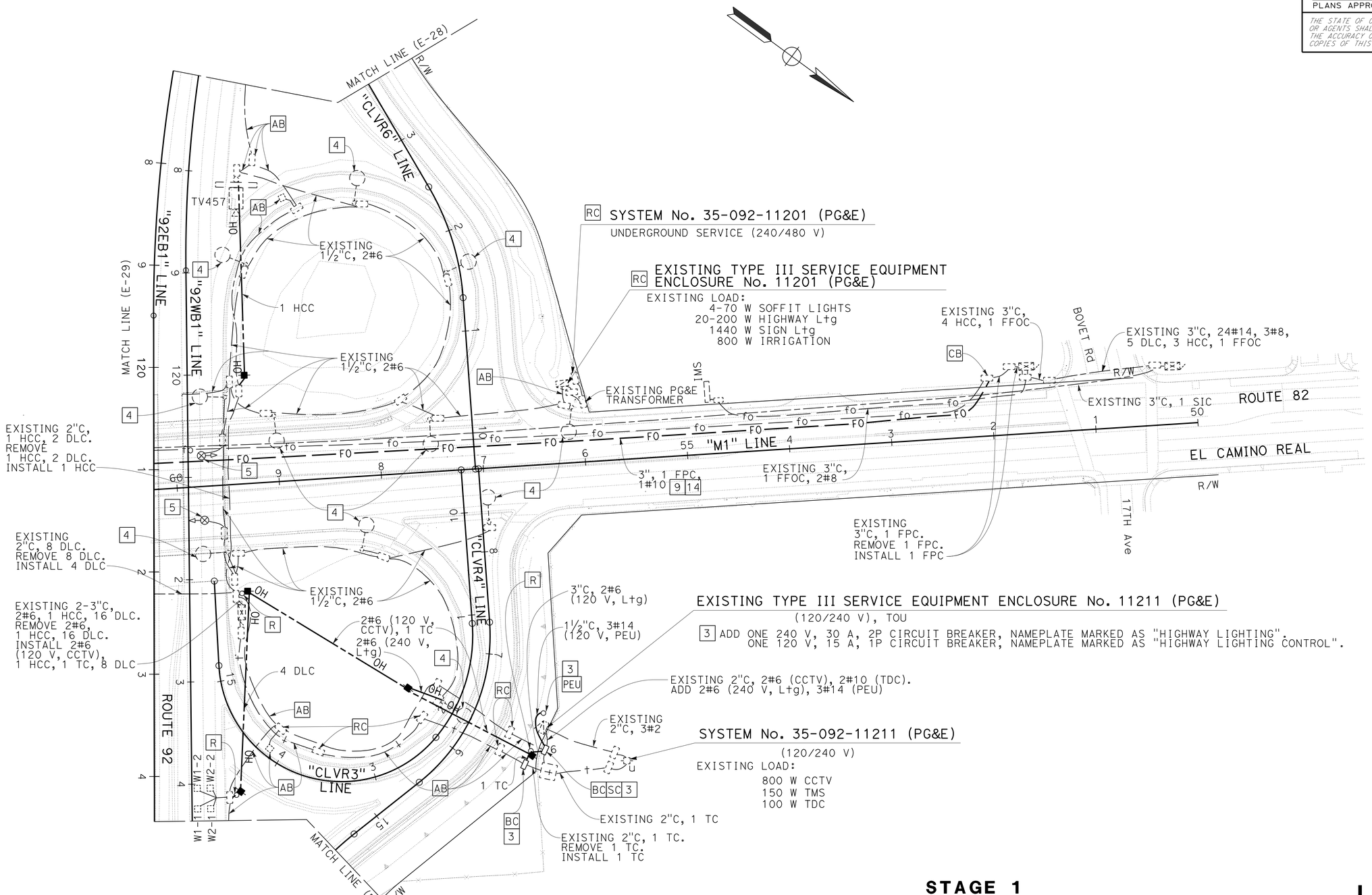

STAGE 1

LIGHTING
(STAGE CONSTRUCTION)

SCALE: 1" = 50'

APPROVED FOR ELECTRICAL WORK ONLY

FOR NOTES, ABBREVIATIONS AND LEGEND, SEE SHEET E-1

E-30

STATE OF CALIFORNIA - DEPARTMENT OF TRANSPORTATION
Caltrans
ELECTRICAL

FUNCTIONAL SUPERVISOR: BEHZAD GOLEMOHAMMADI
CALCULATED-DESIGNED BY: DORIS YANG
CHECKED BY: KENNETH Y. XU
REVISED BY: DY
DATE REVISED: 1-6-16

LAST REVISION 09-22-15
DATE PLOTTED => 15-JUL-2016
TIME PLOTTED => 11:00

Dist	COUNTY	ROUTE	POST MILES TOTAL PROJECT	SHEET No.	TOTAL SHEETS
04	SM	82, 92	10.4/10.7, R11.0/R11.4	216	370

REGISTERED ELECTRICAL ENGINEER 2-17-16 DATE

6-28-16
PLANS APPROVAL DATE

REGISTERED PROFESSIONAL ENGINEER Kenneth Y. Xu No. 15219 Exp. 6-30-18 ELECTRICAL STATE OF CALIFORNIA

THE STATE OF CALIFORNIA OR ITS OFFICERS OR AGENTS SHALL NOT BE RESPONSIBLE FOR THE ACCURACY OR COMPLETENESS OF SCANNED COPIES OF THIS PLAN SHEET.

NOTE:

FOR ACCURATE RIGHT OF WAY DATA, CONTACT RIGHT OF WAY ENGINEERING AT THE DISTRICT OFFICE.

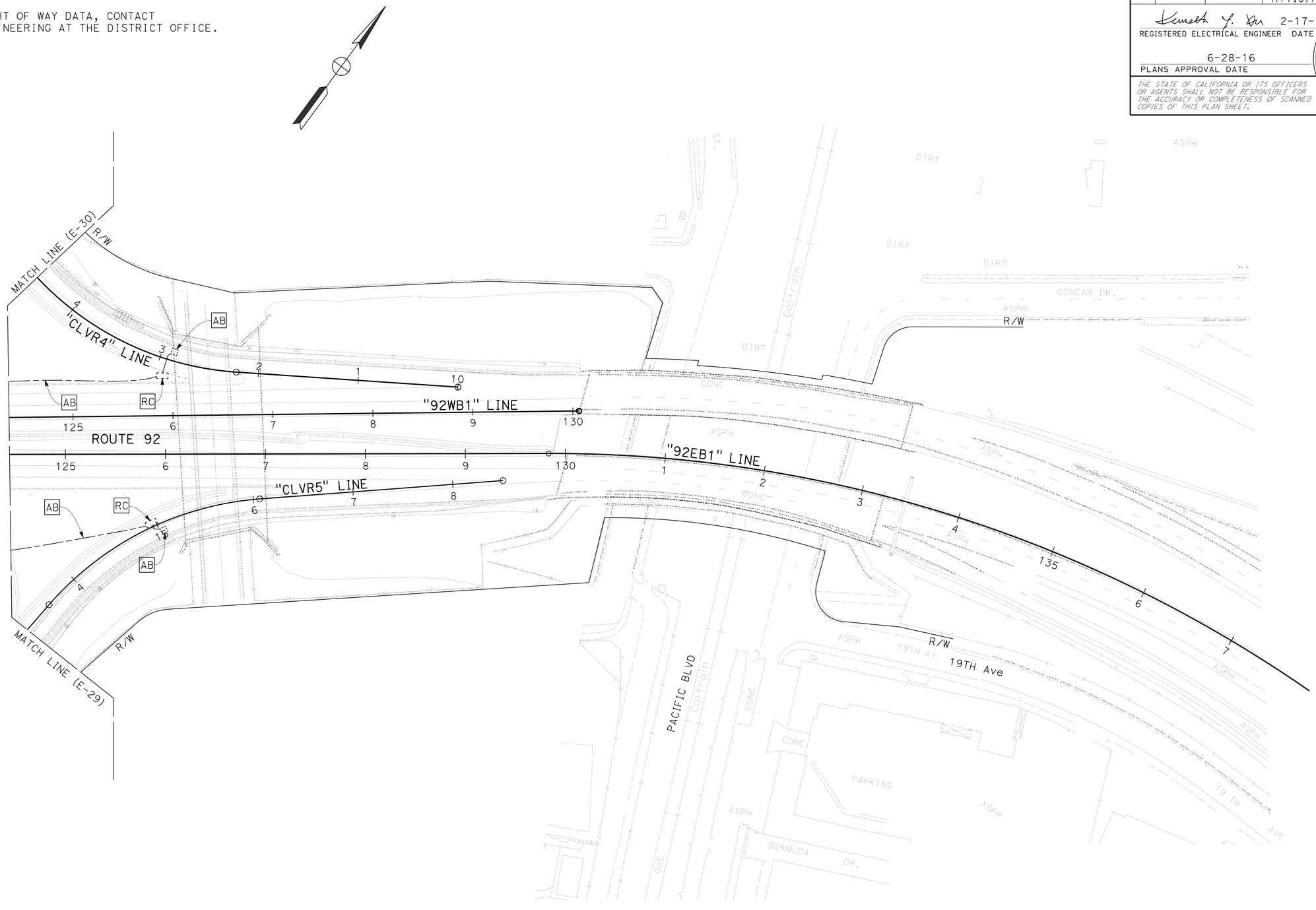

STAGE 1

LIGHTING
(STAGE CONSTRUCTION)

SCALE: 1" = 50'

APPROVED FOR ELECTRICAL WORK ONLY

FOR NOTES, ABBREVIATIONS AND LEGEND, SEE SHEET E-1

E-31

STATE OF CALIFORNIA - DEPARTMENT OF TRANSPORTATION
Caltrans
ELECTRICAL

FUNCTIONAL SUPERVISOR: BEHZAD GOLEMOHAMMADI
CALCULATED-DESIGNED BY: DORIS YANG
CHECKED BY: KENNETH Y. XU
REVISED BY: DY
DATE REVISED: 1-6-16

LAST REVISION: 09-22-15
DATE PLOTTED => 15-JUL-2016
TIME PLOTTED => 11:00

Dist	COUNTY	ROUTE	POST MILES TOTAL PROJECT	SHEET No.	TOTAL SHEETS
04	SM	82, 92	10.4/10.7, R11.0/R11.4	217	370

REGISTERED ELECTRICAL ENGINEER 2-17-16 DATE

6-28-16
PLANS APPROVAL DATE

REGISTERED PROFESSIONAL ENGINEER Kenneth Y. Xu No. 15219 Exp. 6-30-18 ELECTRICAL STATE OF CALIFORNIA

THE STATE OF CALIFORNIA OR ITS OFFICERS OR AGENTS SHALL NOT BE RESPONSIBLE FOR THE ACCURACY OR COMPLETENESS OF SCANNED COPIES OF THIS PLAN SHEET.

NOTE:

FOR ACCURATE RIGHT OF WAY DATA, CONTACT RIGHT OF WAY ENGINEERING AT THE DISTRICT OFFICE.

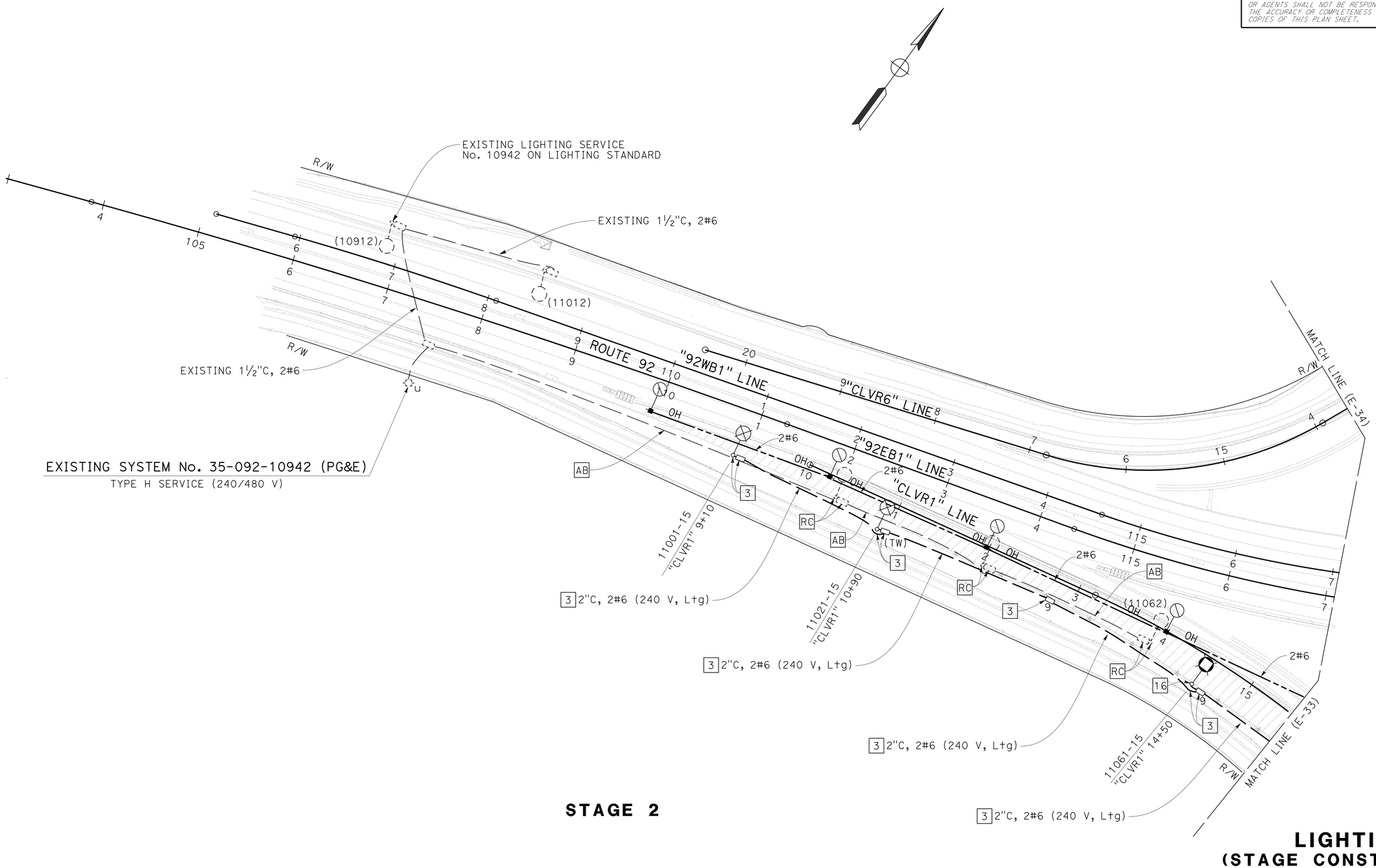

STAGE 2

APPROVED FOR ELECTRICAL WORK ONLY

FOR NOTES, ABBREVIATIONS AND LEGEND, SEE SHEET E-1

LIGHTING
(STAGE CONSTRUCTION)

SCALE: 1" = 50'

E-32

STATE OF CALIFORNIA - DEPARTMENT OF TRANSPORTATION
Caltrans
ELECTRICAL

FUNCTIONAL SUPERVISOR: BEHZAD GOLEMOHAMMADI
CALCULATED-DESIGNED BY: DORIS YANG
CHECKED BY: KENNETH Y. XU
REVISED BY: DY
DATE REVISED: 1-6-16

LAST REVISION 09-22-15 | DATE PLOTTED => 15-JUL-2016 | TIME PLOTTED => 11:00

Dist	COUNTY	ROUTE	POST MILES TOTAL PROJECT	SHEET No.	TOTAL SHEETS
04	SM	82, 92	10.4/10.7, R11.0/R11.4	218	370

REGISTERED ELECTRICAL ENGINEER 2-17-16 DATE

6-28-16
PLANS APPROVAL DATE

REGISTERED PROFESSIONAL ENGINEER Kenneth Y. Xu No. 15219 Exp. 6-30-18 ELECTRICAL STATE OF CALIFORNIA

THE STATE OF CALIFORNIA OR ITS OFFICERS OR AGENTS SHALL NOT BE RESPONSIBLE FOR THE ACCURACY OR COMPLETENESS OF SCANNED COPIES OF THIS PLAN SHEET.

NOTE:

FOR ACCURATE RIGHT OF WAY DATA, CONTACT RIGHT OF WAY ENGINEERING AT THE DISTRICT OFFICE.

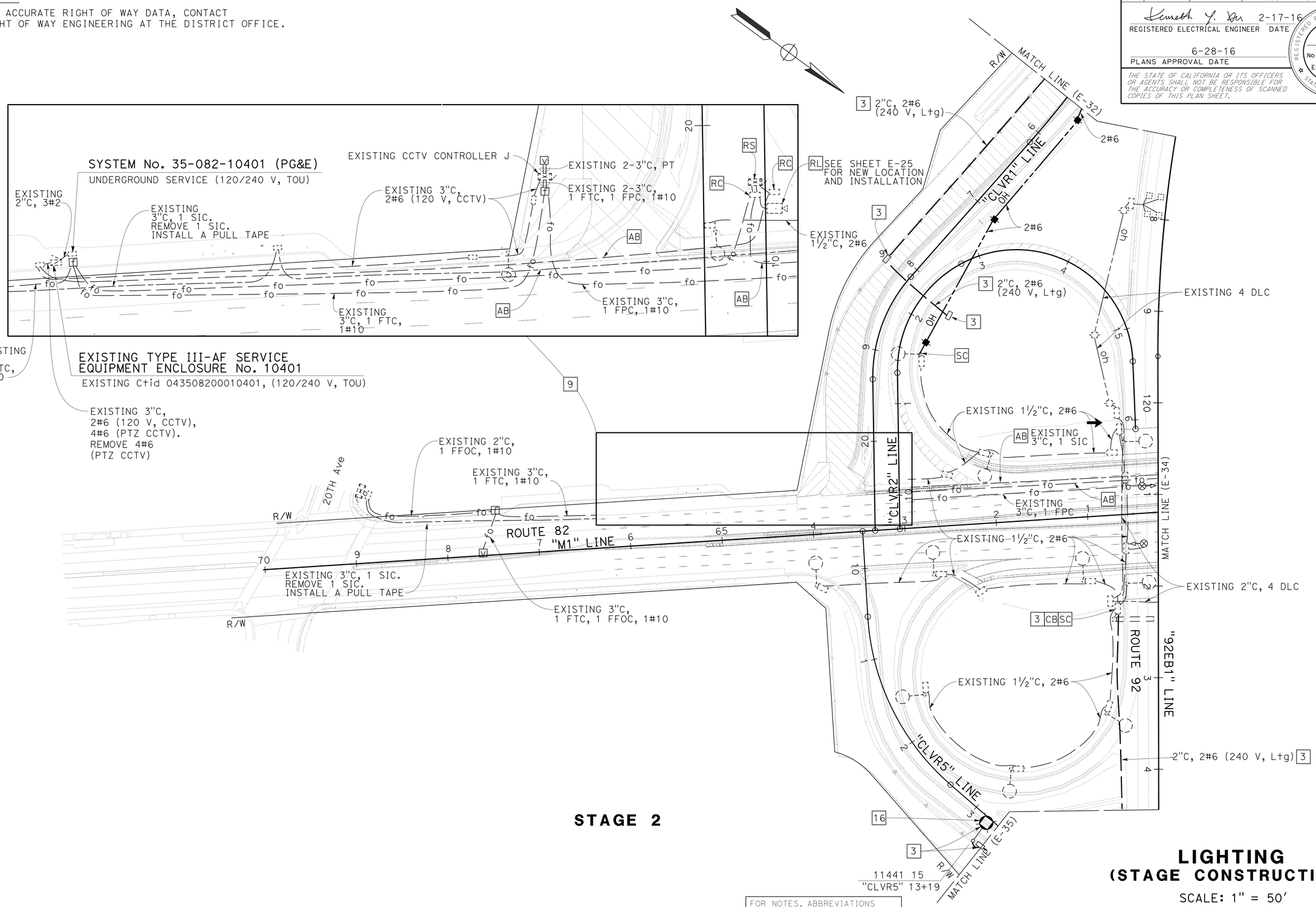

STAGE 2

APPROVED FOR ELECTRICAL WORK ONLY

FOR NOTES, ABBREVIATIONS AND LEGEND, SEE SHEET E-1

LIGHTING
(STAGE CONSTRUCTION)

SCALE: 1" = 50'

E-33

STATE OF CALIFORNIA - DEPARTMENT OF TRANSPORTATION
Caltrans
ELECTRICAL
FUNCTIONAL SUPERVISOR: BEHZAD GOLEMOHAMMADI
CALCULATED-DESIGNED BY: DORIS YANG
CHECKED BY: KENNETH Y. XU
REVISED BY: DY
DATE REVISED: 1-6-16

LAST REVISION 09-22-15
DATE PLOTTED => 15-JUL-2016
TIME PLOTTED => 11:00

Dist	COUNTY	ROUTE	POST MILES TOTAL PROJECT	SHEET No.	TOTAL SHEETS
04	SM	82, 92	10.4/10.7, R11.0/R11.4	219	370

REGISTERED ELECTRICAL ENGINEER 2-17-16 DATE

6-28-16
PLANS APPROVAL DATE

REGISTERED PROFESSIONAL ENGINEER Kenneth Y. Xu No. 15219 Exp. 6-30-18 ELECTRICAL STATE OF CALIFORNIA

THE STATE OF CALIFORNIA OR ITS OFFICERS OR AGENTS SHALL NOT BE RESPONSIBLE FOR THE ACCURACY OR COMPLETENESS OF SCANNED COPIES OF THIS PLAN SHEET.

NOTE:

FOR ACCURATE RIGHT OF WAY DATA, CONTACT RIGHT OF WAY ENGINEERING AT THE DISTRICT OFFICE.

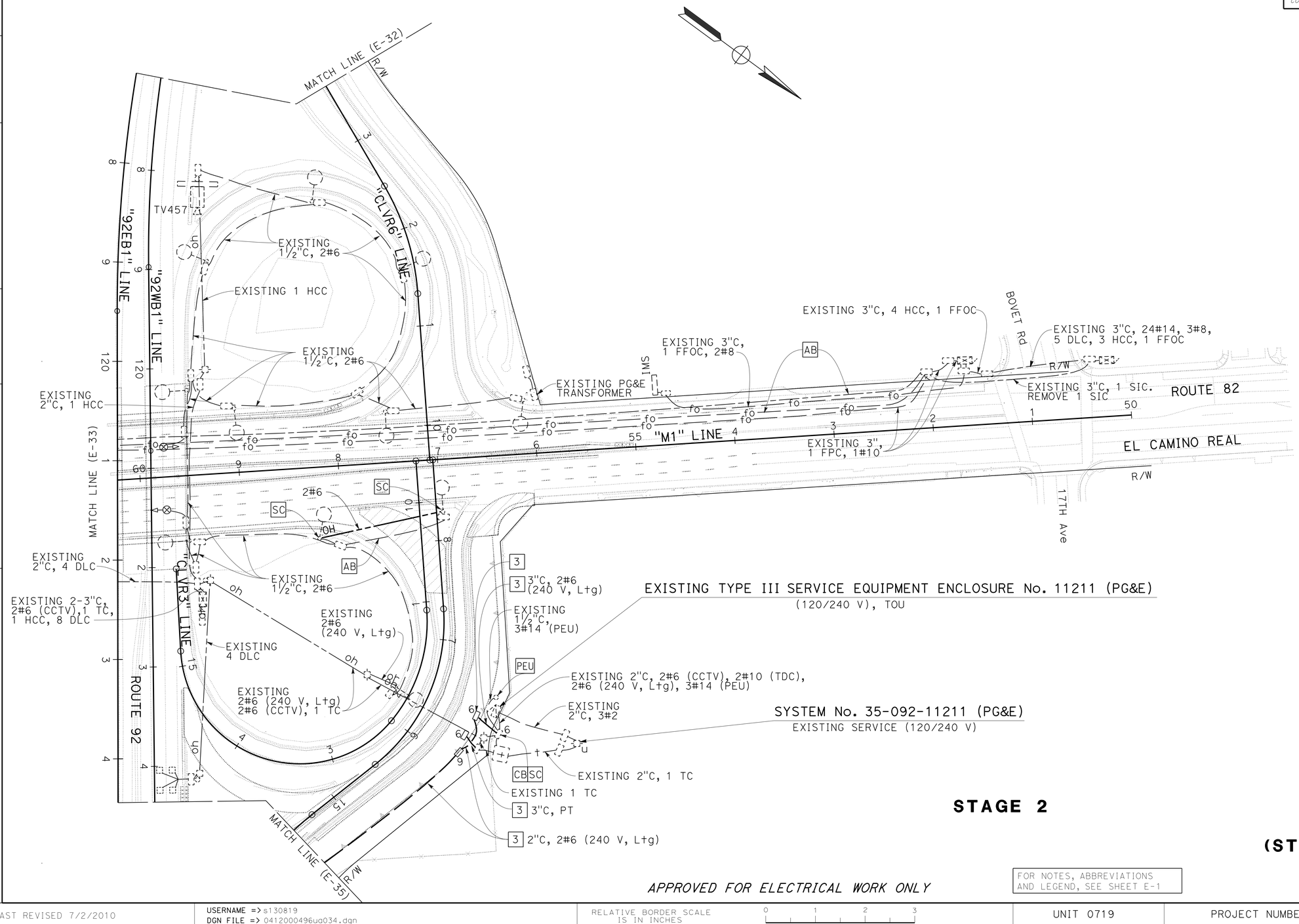

STAGE 2

APPROVED FOR ELECTRICAL WORK ONLY

FOR NOTES, ABBREVIATIONS AND LEGEND, SEE SHEET E-1

LIGHTING
(STAGE CONSTRUCTION)

SCALE: 1" = 50'

E-34

REVISED BY	DY
DATE REVISED	1-6-16
CALCULATED-DESIGNED BY	DORIS YANG
CHECKED BY	KENNETH Y. XU
FUNCTIONAL SUPERVISOR	BEHZAD GOLEMOHAMMADI

STATE OF CALIFORNIA - DEPARTMENT OF TRANSPORTATION

Caltrans

ELECTRICAL

LAST REVISION 09-22-15 | DATE PLOTTED => 15-JUL-2016 | TIME PLOTTED => 11:00

Dist	COUNTY	ROUTE	POST MILES TOTAL PROJECT	SHEET No.	TOTAL SHEETS
04	SM	82, 92	10.4/10.7, R11.0/R11.4	220	370

REGISTERED ELECTRICAL ENGINEER 2-17-16 DATE

6-28-16
PLANS APPROVAL DATE

REGISTERED PROFESSIONAL ENGINEER
Kenneth Y. Xu
No. 15219
Exp. 6-30-18
ELECTRICAL
STATE OF CALIFORNIA

THE STATE OF CALIFORNIA OR ITS OFFICERS OR AGENTS SHALL NOT BE RESPONSIBLE FOR THE ACCURACY OR COMPLETENESS OF SCANNED COPIES OF THIS PLAN SHEET.

NOTE:

FOR ACCURATE RIGHT OF WAY DATA, CONTACT RIGHT OF WAY ENGINEERING AT THE DISTRICT OFFICE.

STAGE 2 TO STAGE 5

LIGHTING
(STAGE CONSTRUCTION)

SCALE: 1" = 50'

APPROVED FOR ELECTRICAL WORK ONLY

FOR NOTES, ABBREVIATIONS AND LEGEND, SEE SHEET E-1

E-35

STATE OF CALIFORNIA - DEPARTMENT OF TRANSPORTATION
Caltrans
ELECTRICAL

FUNCTIONAL SUPERVISOR: BEHZAD GOLEMOHAMMADI
CALCULATED-DESIGNED BY: DORIS YANG
CHECKED BY: KENNETH Y. XU
REVISED BY: DY
DATE REVISED: 1-6-16

LAST REVISION 09-22-15
DATE PLOTTED => 15-JUL-2016
TIME PLOTTED => 11:00

BORDER LAST REVISED 7/2/2010
USERNAME => s130819
DGN FILE => 0412000496ua035.dgn
RELATIVE BORDER SCALE IS IN INCHES 0 1 2 3
UNIT 0719
PROJECT NUMBER & PHASE 04120004961

Dist	COUNTY	ROUTE	POST MILES TOTAL PROJECT	SHEET No.	TOTAL SHEETS
04	SM	82, 92	10.4/10.7, R11.0/R11.4	221	370

REGISTERED ELECTRICAL ENGINEER — DATE: 2-17-16

6-28-16
PLANS APPROVAL DATE

REGISTERED PROFESSIONAL ENGINEER — Kenneth Y. Xu — No. 15219 — Exp. 6-30-18 — ELECTRICAL — STATE OF CALIFORNIA

THE STATE OF CALIFORNIA OR ITS OFFICERS OR AGENTS SHALL NOT BE RESPONSIBLE FOR THE ACCURACY OR COMPLETENESS OF SCANNED COPIES OF THIS PLAN SHEET.

NOTE:

FOR ACCURATE RIGHT OF WAY DATA, CONTACT RIGHT OF WAY ENGINEERING AT THE DISTRICT OFFICE.

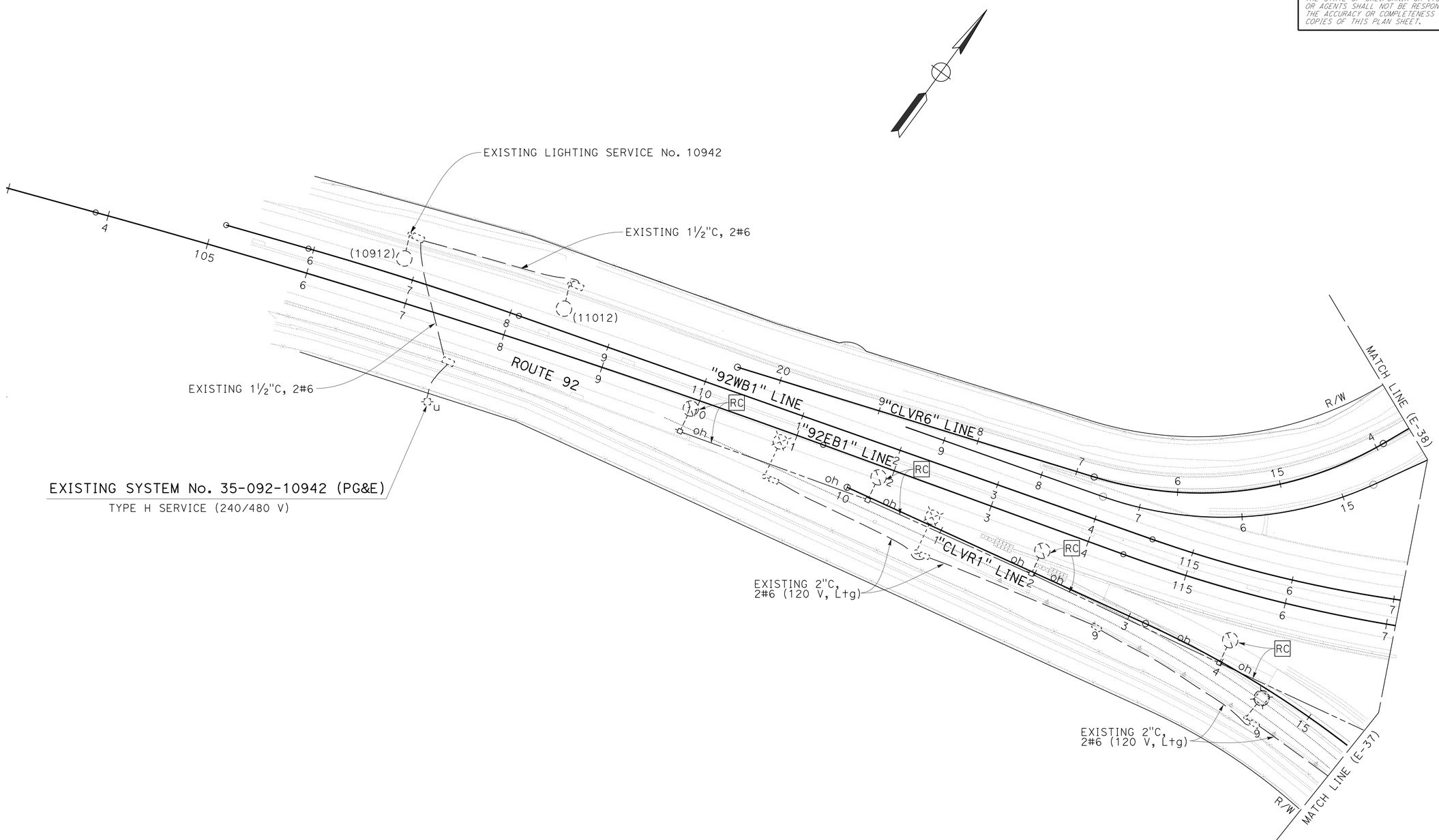

STAGE 3 PHASE 1

APPROVED FOR ELECTRICAL WORK ONLY

FOR NOTES, ABBREVIATIONS AND LEGEND, SEE SHEET E-1

LIGHTING
(STAGE CONSTRUCTION)

SCALE: 1" = 50'

E-36

REVISED BY	DATE REVISED
DY	1-6-16

CALCULATED-DESIGNED BY: DORIS YANG
CHECKED BY: KENNETH Y. XU
FUNCTIONAL SUPERVISOR: BEHZAD GOLEMOHAMMADI

STATE OF CALIFORNIA - DEPARTMENT OF TRANSPORTATION
Caltrans
ELECTRICAL

LAST REVISION 09-22-15 | DATE PLOTTED => 15-JUL-2016 | TIME PLOTTED => 11:00

Dist	COUNTY	ROUTE	POST MILES TOTAL PROJECT	SHEET No.	TOTAL SHEETS
04	SM	82, 92	10.4/10.7, R11.0/R11.4	222	370

REGISTERED ELECTRICAL ENGINEER 2-17-16 DATE

6-28-16
PLANS APPROVAL DATE

REGISTERED PROFESSIONAL ENGINEER Kenneth Y. Xu No. 15219 Exp. 6-30-18 ELECTRICAL STATE OF CALIFORNIA

THE STATE OF CALIFORNIA OR ITS OFFICERS OR AGENTS SHALL NOT BE RESPONSIBLE FOR THE ACCURACY OR COMPLETENESS OF SCANNED COPIES OF THIS PLAN SHEET.

NOTE:

FOR ACCURATE RIGHT OF WAY DATA, CONTACT RIGHT OF WAY ENGINEERING AT THE DISTRICT OFFICE.

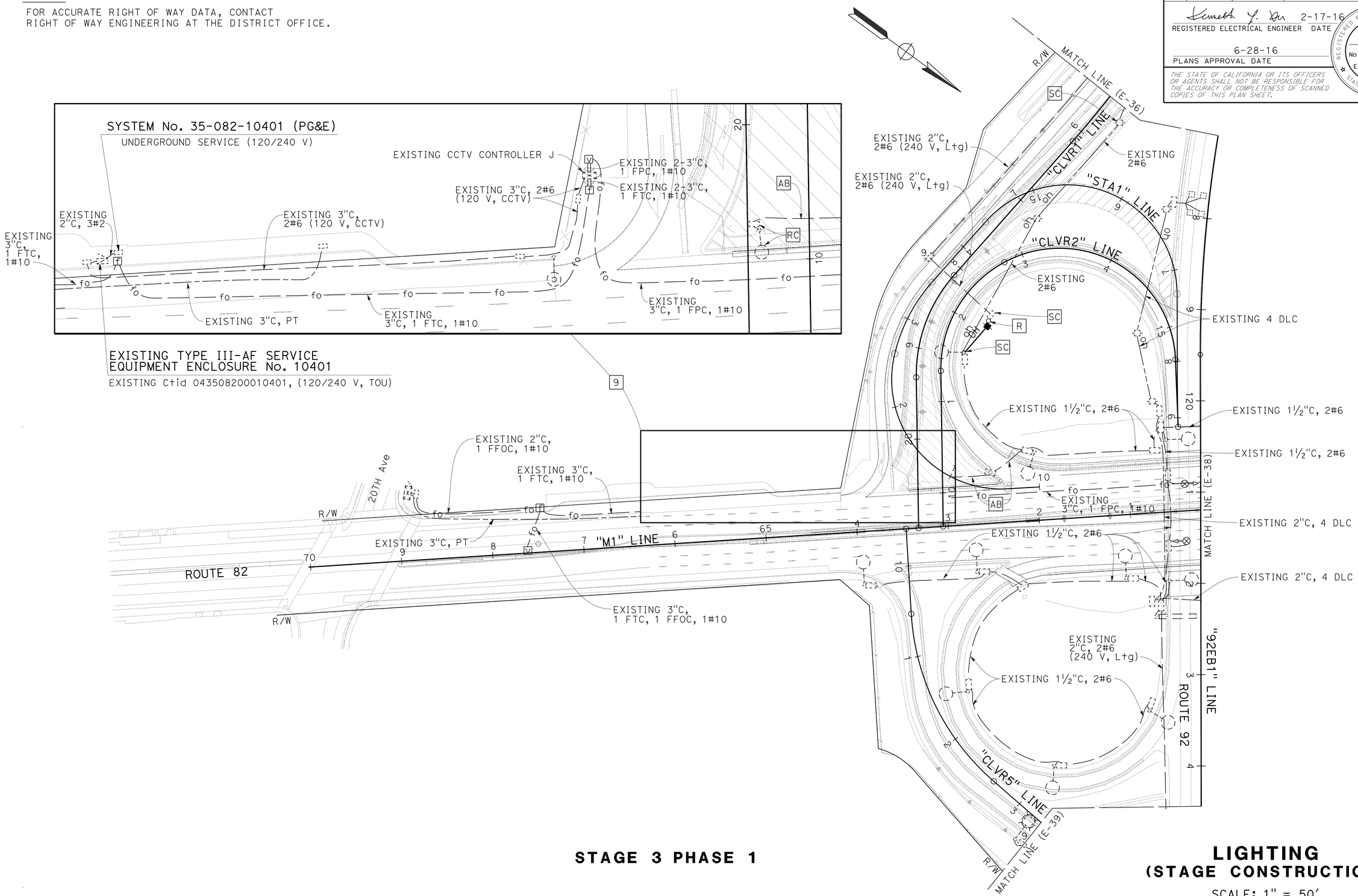

STAGE 3 PHASE 1

APPROVED FOR ELECTRICAL WORK ONLY

FOR NOTES, ABBREVIATIONS AND LEGEND, SEE SHEET E-1

LIGHTING
(STAGE CONSTRUCTION)

SCALE: 1" = 50'

E-37

REVISED BY	DY
DATE REVISED	1-6-16
DORIS YANG	KENNETH Y. XU
CALCULATED-DESIGNED BY	CHECKED BY
FUNCTIONAL SUPERVISOR	BEHZAD GOLEMOHAMMADI

STATE OF CALIFORNIA - DEPARTMENT OF TRANSPORTATION

Caltrans

ELECTRICAL

LAST REVISION 09-22-15 | DATE PLOTTED => 15-JUL-2016 TIME PLOTTED => 11:00

Dist	COUNTY	ROUTE	POST MILES TOTAL PROJECT	SHEET No.	TOTAL SHEETS
04	SM	82, 92	10.4/10.7, R11.0/R11.4	223	370

REGISTERED ELECTRICAL ENGINEER 2-17-16 DATE

6-28-16
PLANS APPROVAL DATE

REGISTERED PROFESSIONAL ENGINEER Kenneth Y. Xu No. 15219 Exp. 6-30-18 ELECTRICAL STATE OF CALIFORNIA

THE STATE OF CALIFORNIA OR ITS OFFICERS OR AGENTS SHALL NOT BE RESPONSIBLE FOR THE ACCURACY OR COMPLETENESS OF SCANNED COPIES OF THIS PLAN SHEET.

NOTE:

FOR ACCURATE RIGHT OF WAY DATA, CONTACT RIGHT OF WAY ENGINEERING AT THE DISTRICT OFFICE.

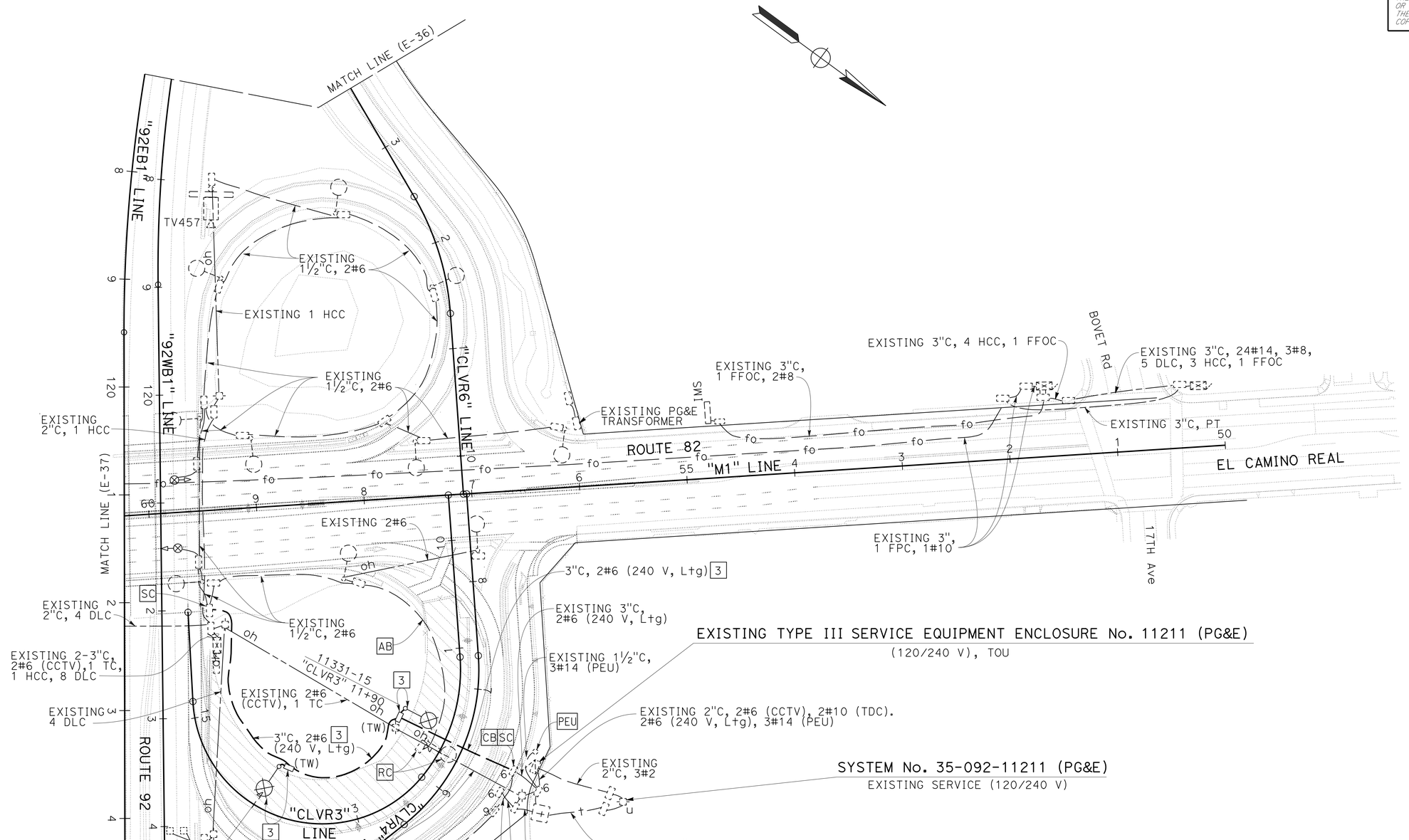

STAGE 3 PHASE 1

APPROVED FOR ELECTRICAL WORK ONLY

FOR NOTES, ABBREVIATIONS AND LEGEND, SEE SHEET E-1

LIGHTING
(STAGE CONSTRUCTION)

SCALE: 1" = 50'

E-38

CALCULATED- DESIGNED BY	
CHECKED BY	
REVISED BY	DY
DATE REVISED	1-6-16
FUNCTIONAL SUPERVISOR	BEHZAD GOLEMOHAMMADI
DORIS YANG	KENNETH Y. XU

STATE OF CALIFORNIA - DEPARTMENT OF TRANSPORTATION **ELECTRICAL**

Caltrans

LAST REVISION 09-22-15 | DATE PLOTTED => 15-JUL-2016 | TIME PLOTTED => 11:01

Dist	COUNTY	ROUTE	POST MILES TOTAL PROJECT	SHEET No.	TOTAL SHEETS
04	SM	82, 92	10.4/10.7, R11.0/R11.4	224	370

REGISTERED ELECTRICAL ENGINEER — DATE: 2-17-16

PLANS APPROVAL DATE: 6-28-16

REGISTERED PROFESSIONAL ENGINEER — Kenneth Y. Xu — No. 15219 — Exp. 6-30-18 — ELECTRICAL — STATE OF CALIFORNIA

THE STATE OF CALIFORNIA OR ITS OFFICERS OR AGENTS SHALL NOT BE RESPONSIBLE FOR THE ACCURACY OR COMPLETENESS OF SCANNED COPIES OF THIS PLAN SHEET.

NOTE:

FOR ACCURATE RIGHT OF WAY DATA, CONTACT RIGHT OF WAY ENGINEERING AT THE DISTRICT OFFICE.

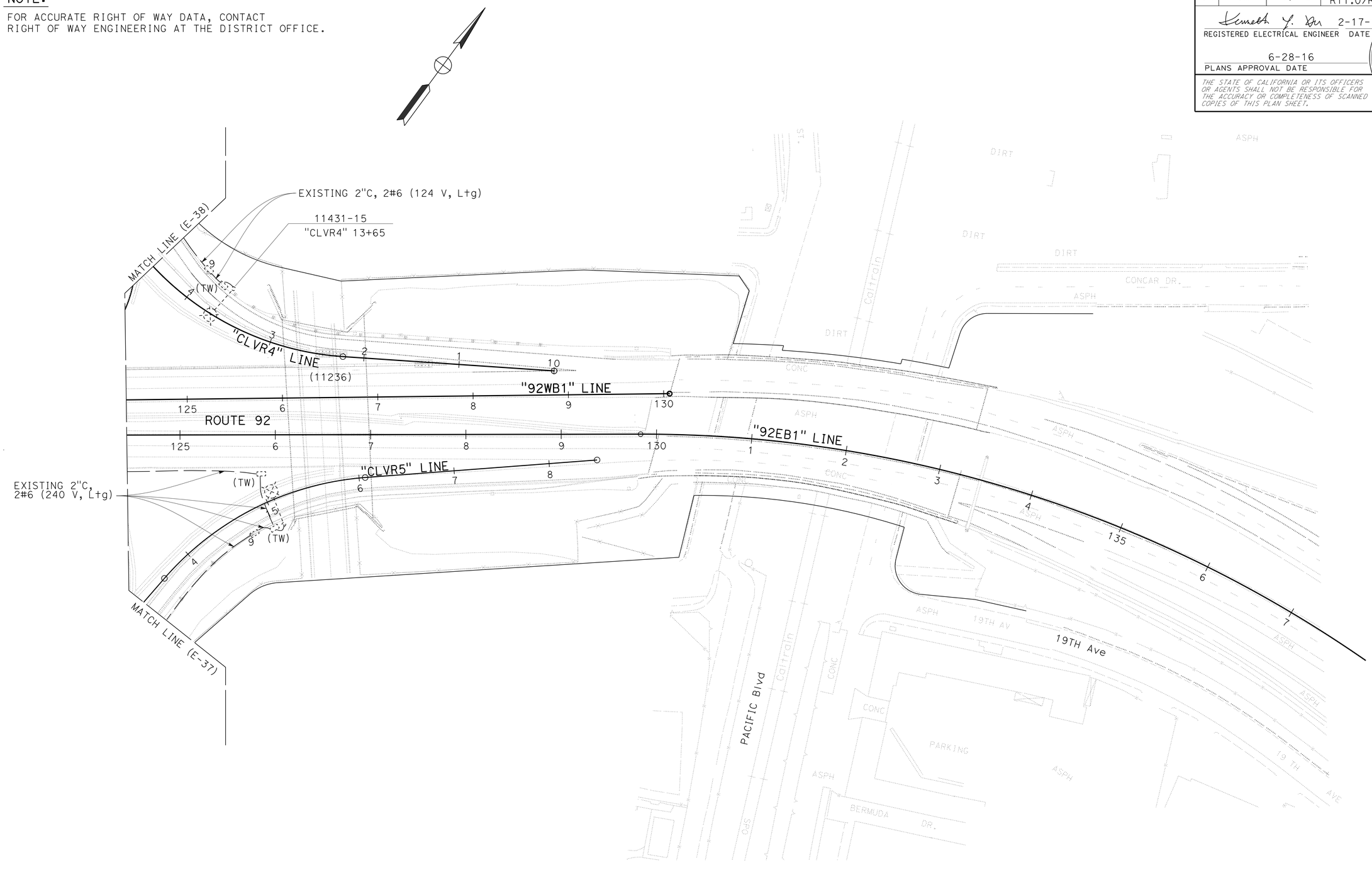

STAGE 3 PHASE 1

APPROVED FOR ELECTRICAL WORK ONLY

FOR NOTES, ABBREVIATIONS AND LEGEND, SEE SHEET E-1

LIGHTING
(STAGE CONSTRUCTION)

SCALE: 1" = 50'

E-39

STATE OF CALIFORNIA - DEPARTMENT OF TRANSPORTATION

Caltrans

ELECTRICAL

FUNCTIONAL SUPERVISOR: BEHZAD GOLEMOHAMMADI

CALCULATED-DESIGNED BY: DORIS YANG

CHECKED BY: KENNETH Y. XU

REVISED BY: DY

DATE REVISED: 1-6-16

LAST REVISION: 09-02-15

DATE PLOTTED => 15-JUL-2016

TIME PLOTTED => 11:01

Dist	COUNTY	ROUTE	POST MILES TOTAL PROJECT	SHEET No.	TOTAL SHEETS
04	SM	82, 92	10.4/10.7, R11.0/R11.4	225	370

REGISTERED ELECTRICAL ENGINEER 2-17-16 DATE

6-28-16
PLANS APPROVAL DATE

REGISTERED PROFESSIONAL ENGINEER Kenneth Y. Xu No. 15219 Exp. 6-30-18 ELECTRICAL STATE OF CALIFORNIA

THE STATE OF CALIFORNIA OR ITS OFFICERS OR AGENTS SHALL NOT BE RESPONSIBLE FOR THE ACCURACY OR COMPLETENESS OF SCANNED COPIES OF THIS PLAN SHEET.

NOTE:

FOR ACCURATE RIGHT OF WAY DATA, CONTACT RIGHT OF WAY ENGINEERING AT THE DISTRICT OFFICE.

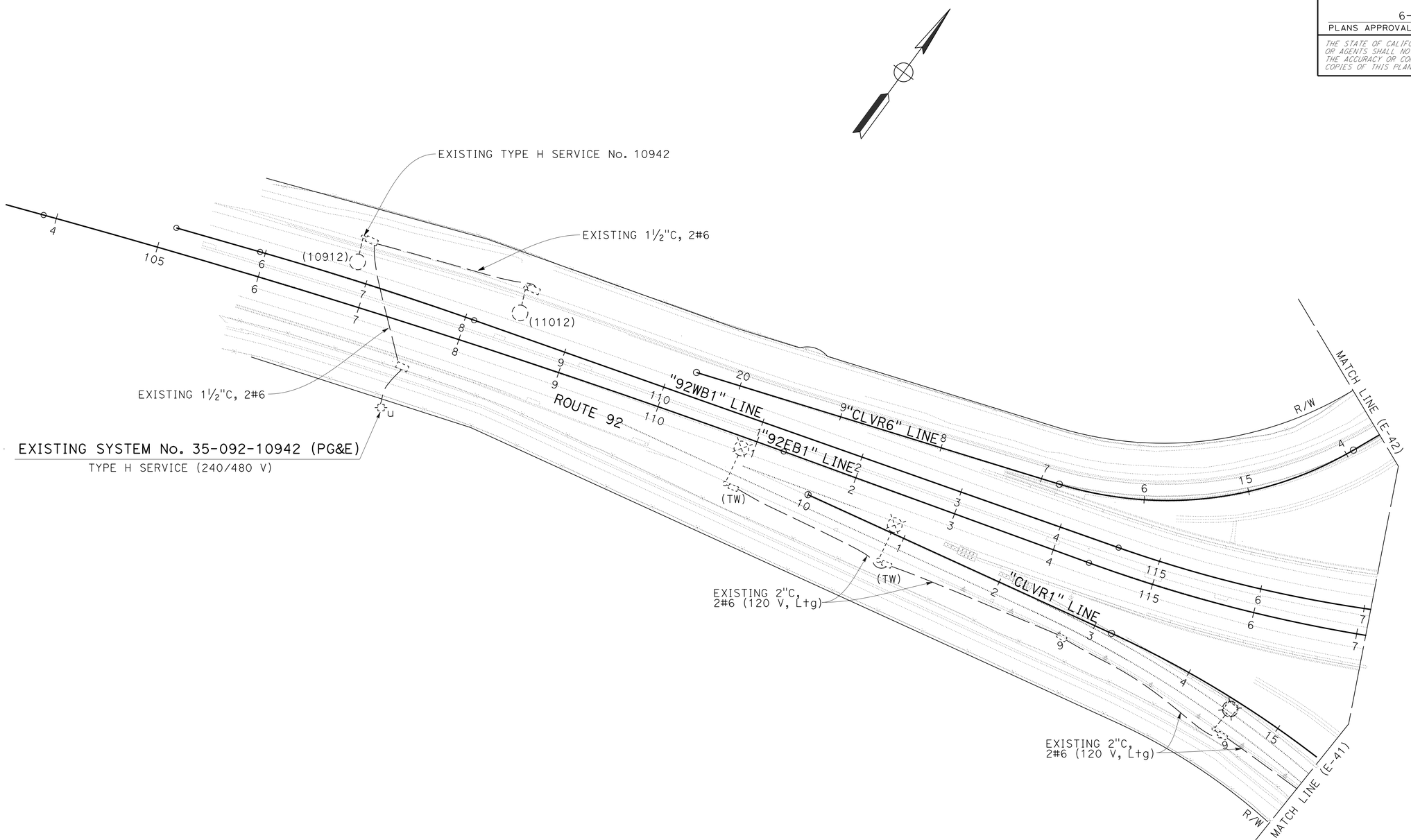

STAGE 3 PHASE 2

LIGHTING
(STAGE CONSTRUCTION)

SCALE: 1" = 50'

APPROVED FOR ELECTRICAL WORK ONLY

FOR NOTES, ABBREVIATIONS AND LEGEND, SEE SHEET E-1

E-40

REVISED BY	DATE REVISED
DY	1-6-16

CALCULATED-DESIGNED BY: DORIS YANG
CHECKED BY: KENNETH Y. XU
FUNCTIONAL SUPERVISOR: BEHZAD GOLEMOHAMMADI

STATE OF CALIFORNIA - DEPARTMENT OF TRANSPORTATION
Caltrans
ELECTRICAL

LAST REVISION 09-22-15 | DATE PLOTTED => 15-JUL-2016 | TIME PLOTTED => 11:01

Dist	COUNTY	ROUTE	POST MILES TOTAL PROJECT	SHEET No.	TOTAL SHEETS
04	SM	82, 92	10.4/10.7, R11.0/R11.4	226	370

REGISTERED ELECTRICAL ENGINEER 2-17-16 DATE

6-28-16
PLANS APPROVAL DATE

REGISTERED PROFESSIONAL ENGINEER Kenneth Y. Xu No. 15219 Exp. 6-30-18 ELECTRICAL STATE OF CALIFORNIA

THE STATE OF CALIFORNIA OR ITS OFFICERS OR AGENTS SHALL NOT BE RESPONSIBLE FOR THE ACCURACY OR COMPLETENESS OF SCANNED COPIES OF THIS PLAN SHEET.

NOTE:

FOR ACCURATE RIGHT OF WAY DATA, CONTACT RIGHT OF WAY ENGINEERING AT THE DISTRICT OFFICE.

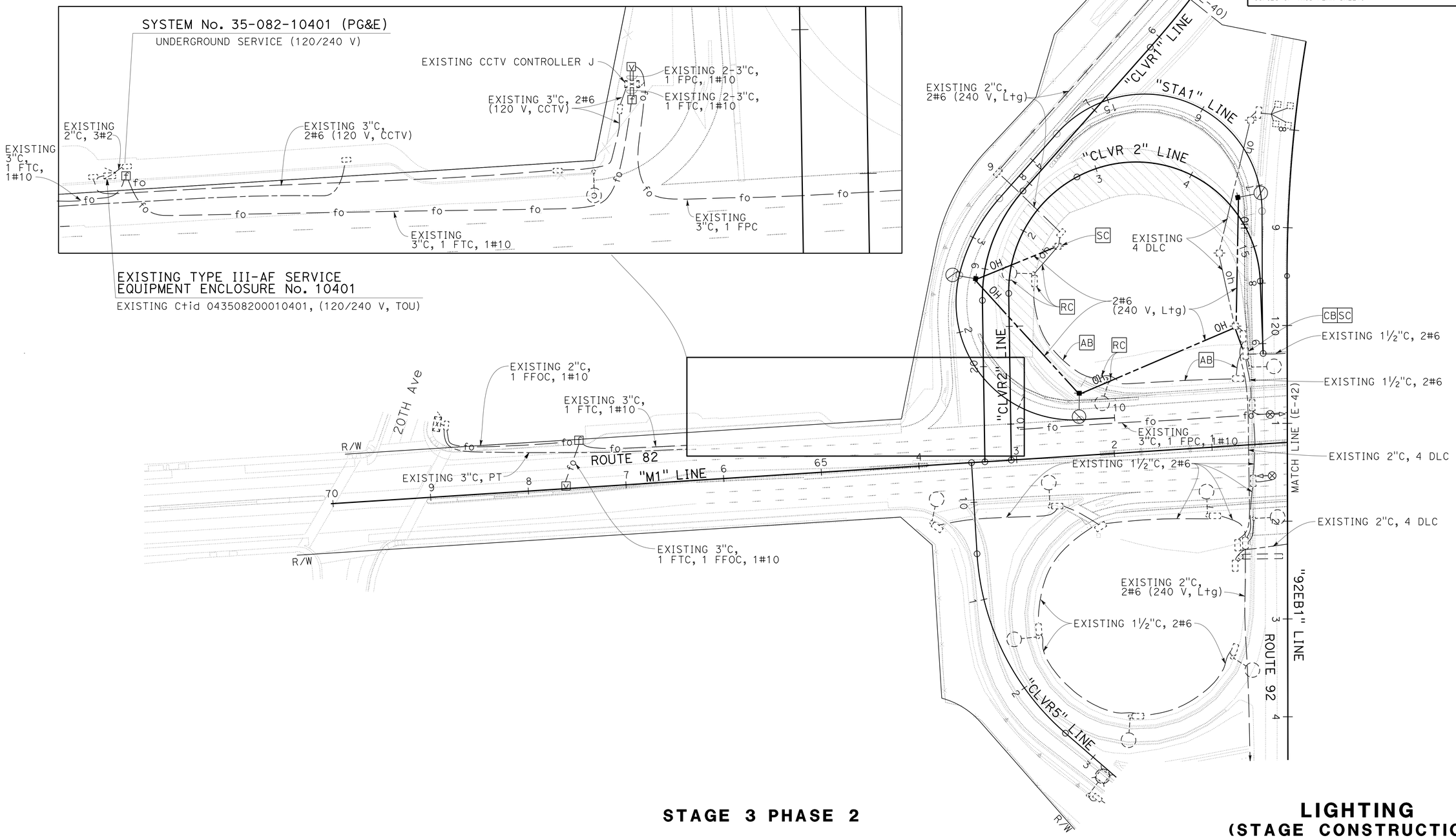

STAGE 3 PHASE 2

LIGHTING
(STAGE CONSTRUCTION)

SCALE: 1" = 50'

APPROVED FOR ELECTRICAL WORK ONLY

FOR NOTES, ABBREVIATIONS AND LEGEND, SEE SHEET E-1

E-41

STATE OF CALIFORNIA - DEPARTMENT OF TRANSPORTATION
Caltrans
ELECTRICAL

FUNCTIONAL SUPERVISOR: BEHZAD GOLEMOHAMMADI
CALCULATED-DESIGNED BY: DORIS YANG
CHECKED BY: KENNETH Y. XU
REVISED BY: DY
DATE REVISED: 1-6-16

LAST REVISION 09-22-15
DATE PLOTTED => 15-JUL-2016
TIME PLOTTED => 11:01

Dist	COUNTY	ROUTE	POST MILES TOTAL PROJECT	SHEET No.	TOTAL SHEETS
04	SM	82, 92	10.4/10.7, R11.0/R11.4	227	370

REGISTERED ELECTRICAL ENGINEER 2-17-16 DATE

6-28-16
PLANS APPROVAL DATE

REGISTERED PROFESSIONAL ENGINEER Kenneth Y. Xu No. 15219 Exp. 6-30-18 ELECTRICAL STATE OF CALIFORNIA

THE STATE OF CALIFORNIA OR ITS OFFICERS OR AGENTS SHALL NOT BE RESPONSIBLE FOR THE ACCURACY OR COMPLETENESS OF SCANNED COPIES OF THIS PLAN SHEET.

NOTE:

FOR ACCURATE RIGHT OF WAY DATA, CONTACT RIGHT OF WAY ENGINEERING AT THE DISTRICT OFFICE.

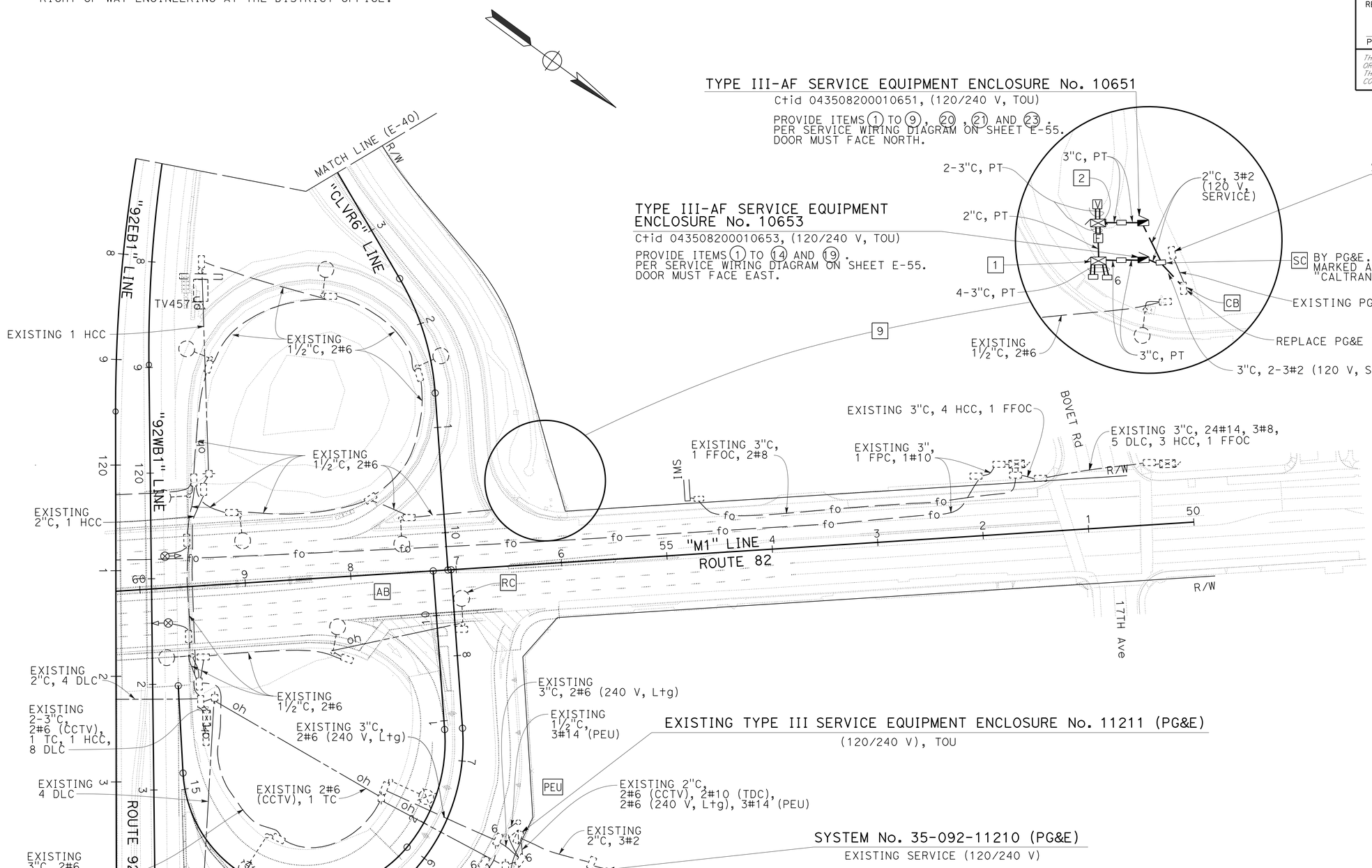

STAGE 3 PHASE 2

APPROVED FOR ELECTRICAL WORK ONLY

FOR NOTES, ABBREVIATIONS AND LEGEND, SEE SHEET E-1

LIGHTING
(STAGE CONSTRUCTION)

SCALE: 1" = 50'

E-42

DORIS YANG	KENNETH Y. XU	DY	1-6-16
CALCULATED-DESIGNED BY	CHECKED BY	REVISED BY	DATE REVISED
FUNCTIONAL SUPERVISOR	BEHZAD GOLEMOHAMMADI		

STATE OF CALIFORNIA - DEPARTMENT OF TRANSPORTATION
Caltrans
ELECTRICAL

LAST REVISION 09-22-15 | DATE PLOTTED => 15-JUL-2016 | TIME PLOTTED => 11:01

Dist	COUNTY	ROUTE	POST MILES TOTAL PROJECT	SHEET No.	TOTAL SHEETS
04	SM	82, 92	10.4/10.7, R11.0/R11.4	228	370

REGISTERED ELECTRICAL ENGINEER 2-17-16 DATE

6-28-16
PLANS APPROVAL DATE

REGISTERED PROFESSIONAL ENGINEER Kenneth Y. Xu No. 15219 Exp. 6-30-18 ELECTRICAL STATE OF CALIFORNIA

THE STATE OF CALIFORNIA OR ITS OFFICERS OR AGENTS SHALL NOT BE RESPONSIBLE FOR THE ACCURACY OR COMPLETENESS OF SCANNED COPIES OF THIS PLAN SHEET.

NOTE:

FOR ACCURATE RIGHT OF WAY DATA, CONTACT RIGHT OF WAY ENGINEERING AT THE DISTRICT OFFICE.

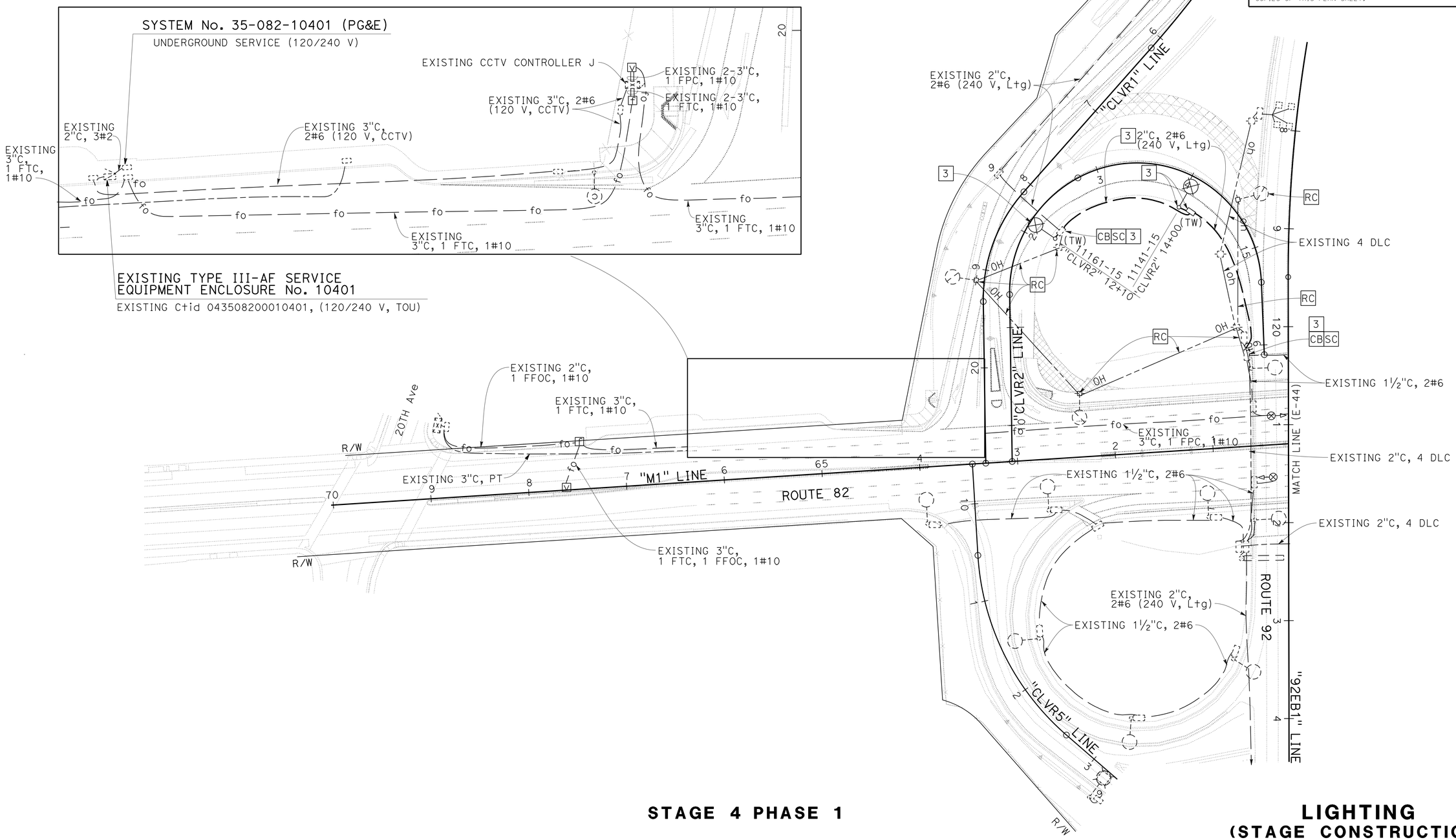

STAGE 4 PHASE 1

APPROVED FOR ELECTRICAL WORK ONLY

FOR NOTES, ABBREVIATIONS AND LEGEND, SEE SHEET E-1

LIGHTING
(STAGE CONSTRUCTION)

SCALE: 1" = 50'

E-43

STATE OF CALIFORNIA - DEPARTMENT OF TRANSPORTATION
Caltrans
ELECTRICAL

FUNCTIONAL SUPERVISOR: BEHZAD GOLEMOHAMMADI
CALCULATED-DESIGNED BY: DORIS YANG
CHECKED BY: KENNETH Y. XU
REVISED BY: DY
DATE REVISED: 1-6-16

LAST REVISION 09-22-15
DATE PLOTTED => 15-JUL-2016
TIME PLOTTED => 11:01

Dist	COUNTY	ROUTE	POST MILES TOTAL PROJECT	SHEET No.	TOTAL SHEETS
04	SM	82, 92	10.4/10.7, R11.0/R11.4	229	370

REGISTERED ELECTRICAL ENGINEER 2-17-16 DATE

6-28-16
PLANS APPROVAL DATE

REGISTERED PROFESSIONAL ENGINEER Kenneth Y. Xu No. 15219 Exp. 6-30-18 ELECTRICAL STATE OF CALIFORNIA

THE STATE OF CALIFORNIA OR ITS OFFICERS OR AGENTS SHALL NOT BE RESPONSIBLE FOR THE ACCURACY OR COMPLETENESS OF SCANNED COPIES OF THIS PLAN SHEET.

NOTE:

FOR ACCURATE RIGHT OF WAY DATA, CONTACT RIGHT OF WAY ENGINEERING AT THE DISTRICT OFFICE.

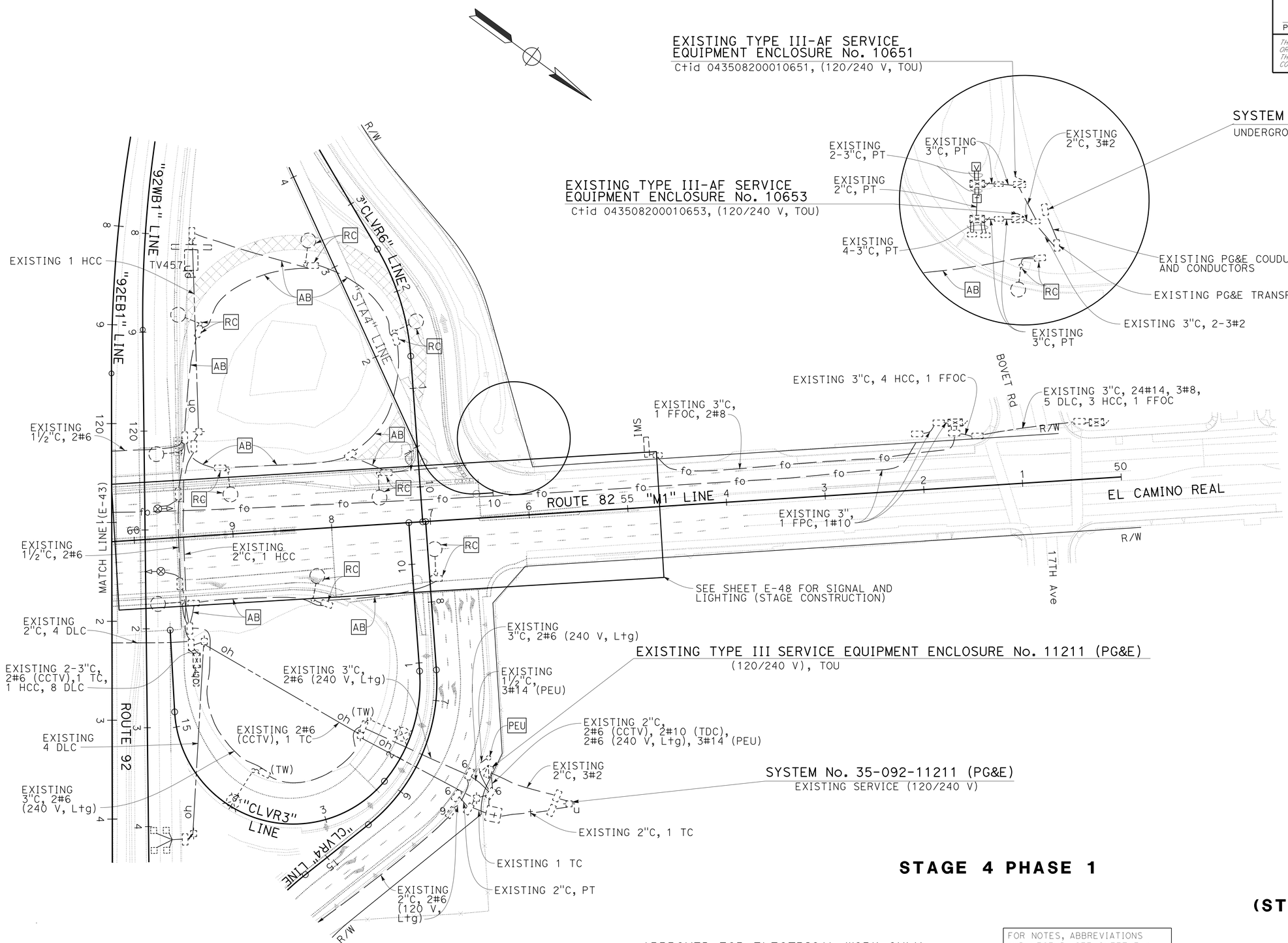

STAGE 4 PHASE 1

APPROVED FOR ELECTRICAL WORK ONLY

FOR NOTES, ABBREVIATIONS AND LEGEND, SEE SHEET E-1

LIGHTING
(STAGE CONSTRUCTION)

SCALE: 1" = 50'

E-44

CALCULATED-DESIGNED BY	DORIS YANG	REVISED BY	DY
CHECKED BY	KENNETH Y. XU	DATE REVISED	1-6-16
FUNCTIONAL SUPERVISOR	BEHZAD GOLEMOHAMMADI		

STATE OF CALIFORNIA - DEPARTMENT OF TRANSPORTATION

Caltrans

ELECTRICAL

LAST REVISION 09-22-15 | DATE PLOTTED => 15-JUL-2016 | TIME PLOTTED => 11:01

Dist	COUNTY	ROUTE	POST MILES TOTAL PROJECT	SHEET No.	TOTAL SHEETS
04	SM	82, 92	10.4/10.7, R11.0/R11.4	230	370

REGISTERED ELECTRICAL ENGINEER 2-17-16 DATE

6-28-16
PLANS APPROVAL DATE

REGISTERED PROFESSIONAL ENGINEER Kenneth Y. Xu No. 15219 Exp. 6-30-18 ELECTRICAL STATE OF CALIFORNIA

THE STATE OF CALIFORNIA OR ITS OFFICERS OR AGENTS SHALL NOT BE RESPONSIBLE FOR THE ACCURACY OR COMPLETENESS OF SCANNED COPIES OF THIS PLAN SHEET.

NOTE:

FOR ACCURATE RIGHT OF WAY DATA, CONTACT RIGHT OF WAY ENGINEERING AT THE DISTRICT OFFICE.

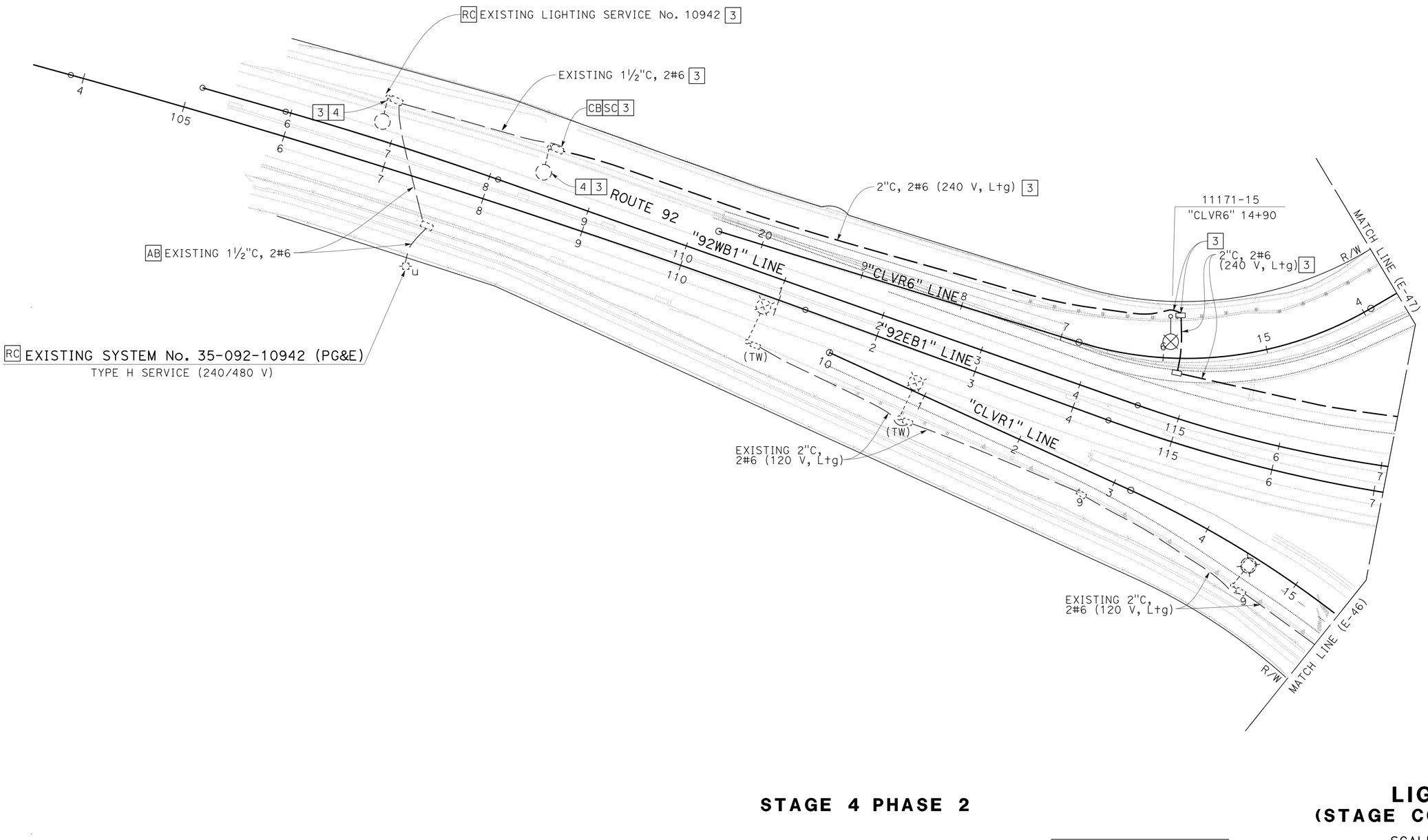

STAGE 4 PHASE 2

APPROVED FOR ELECTRICAL WORK ONLY

FOR NOTES, ABBREVIATIONS AND LEGEND, SEE SHEET E-1

LIGHTING
(STAGE CONSTRUCTION)

SCALE: 1" = 50'

E-45

REVISED BY	DATE REVISED
DY	1-6-16

CALCULATED-DESIGNED BY: DORIS YANG
CHECKED BY: KENNETH Y. XU
FUNCTIONAL SUPERVISOR: BEHZAD GOLEMOHAMMADI

STATE OF CALIFORNIA - DEPARTMENT OF TRANSPORTATION
Caltrans
ELECTRICAL

LAST REVISION 09-22-15
DATE PLOTTED => 15-JUL-2016
TIME PLOTTED => 11:01

Dist	COUNTY	ROUTE	POST MILES TOTAL PROJECT	SHEET No.	TOTAL SHEETS
04	SM	82, 92	10.4/10.7, R11.0/R11.4	231	370

REGISTERED ELECTRICAL ENGINEER 2-17-16 DATE

6-28-16
PLANS APPROVAL DATE

REGISTERED PROFESSIONAL ENGINEER Kenneth Y. Xu No. 15219 Exp. 6-30-18 ELECTRICAL STATE OF CALIFORNIA

THE STATE OF CALIFORNIA OR ITS OFFICERS OR AGENTS SHALL NOT BE RESPONSIBLE FOR THE ACCURACY OR COMPLETENESS OF SCANNED COPIES OF THIS PLAN SHEET.

NOTE:

FOR ACCURATE RIGHT OF WAY DATA, CONTACT RIGHT OF WAY ENGINEERING AT THE DISTRICT OFFICE.

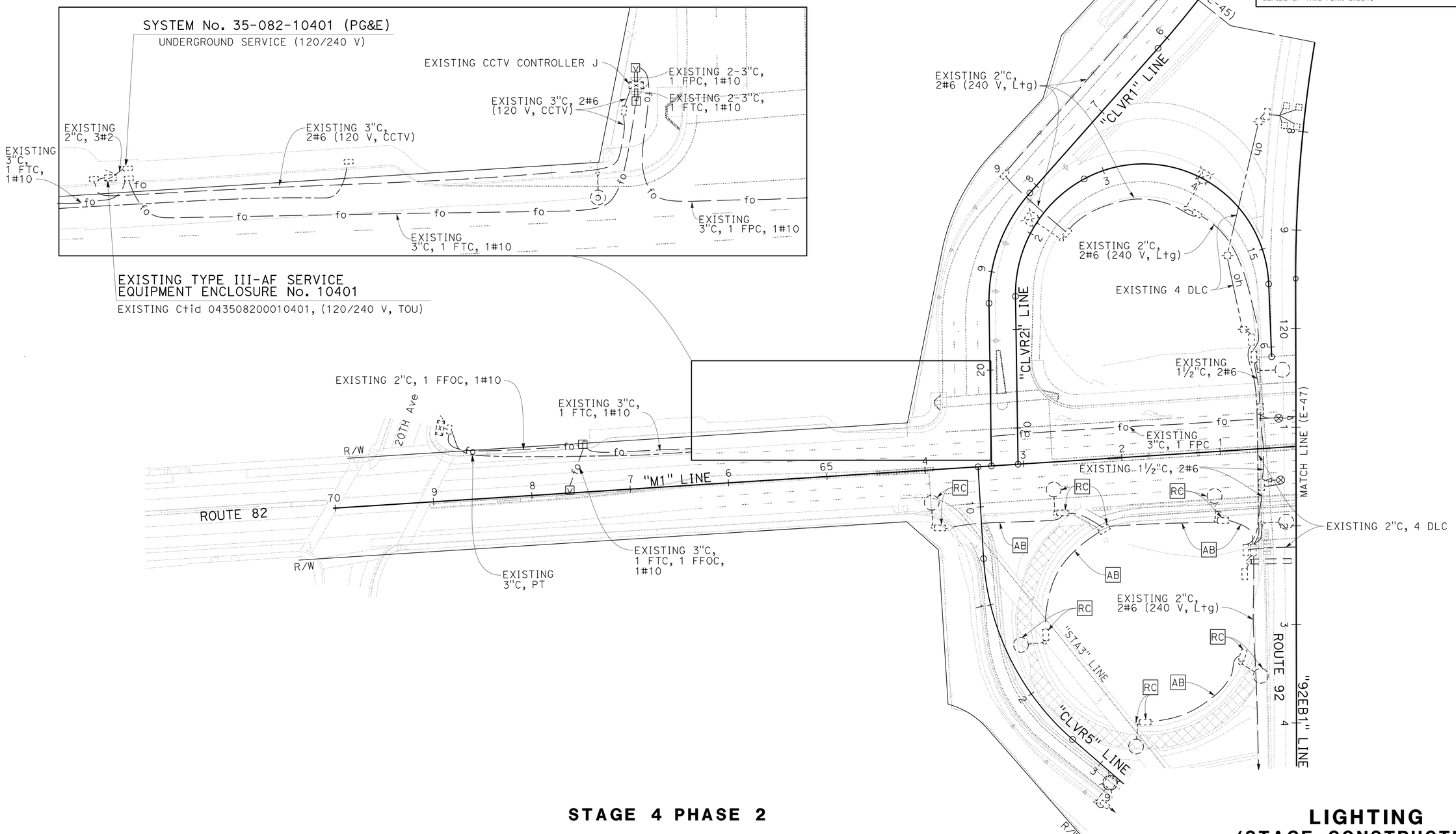

STAGE 4 PHASE 2

LIGHTING
(STAGE CONSTRUCTION)

SCALE: 1" = 50'

APPROVED FOR ELECTRICAL WORK ONLY

FOR NOTES, ABBREVIATIONS AND LEGEND, SEE SHEET E-1

E-46

STATE OF CALIFORNIA - DEPARTMENT OF TRANSPORTATION
Caltrans
ELECTRICAL

FUNCTIONAL SUPERVISOR: BEHZAD GOLEMOHAMMADI
CALCULATED-DESIGNED BY: DORIS YANG
CHECKED BY: KENNETH Y. XU
REVISED BY: DY
DATE REVISED: 1-6-16

LAST REVISION 09-22-15
DATE PLOTTED => 15-JUL-2016
TIME PLOTTED => 11:01

Dist	COUNTY	ROUTE	POST MILES TOTAL PROJECT	SHEET No.	TOTAL SHEETS
04	SM	82, 92	10.4/10.7, R11.0/R11.4	232	370

REGISTERED ELECTRICAL ENGINEER 2-17-16 DATE

6-28-16
PLANS APPROVAL DATE

REGISTERED PROFESSIONAL ENGINEER Kenneth Y. Xu No. 15219 Exp. 6-30-18 ELECTRICAL STATE OF CALIFORNIA

THE STATE OF CALIFORNIA OR ITS OFFICERS OR AGENTS SHALL NOT BE RESPONSIBLE FOR THE ACCURACY OR COMPLETENESS OF SCANNED COPIES OF THIS PLAN SHEET.

NOTE:

FOR ACCURATE RIGHT OF WAY DATA, CONTACT RIGHT OF WAY ENGINEERING AT THE DISTRICT OFFICE.

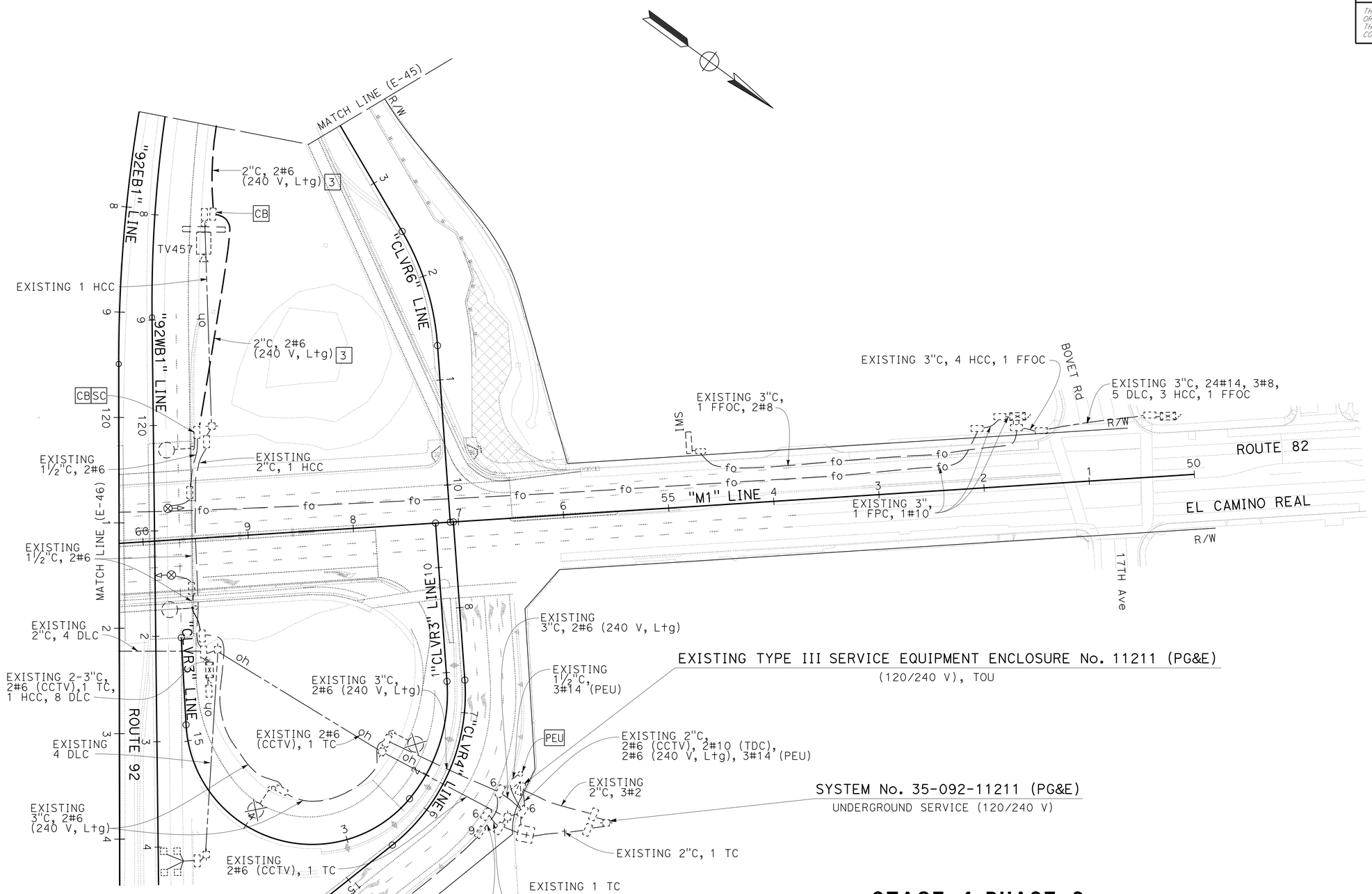

STAGE 4 PHASE 2

APPROVED FOR ELECTRICAL WORK ONLY

FOR NOTES, ABBREVIATIONS AND LEGEND, SEE SHEET E-1

LIGHTING
(STAGE CONSTRUCTION)

SCALE: 1" = 50'

E-47

CALCULATED-DESIGNED BY	DORIS YANG	REVISED BY	DY
CHECKED BY	KENNETH Y. XU	DATE REVISED	1-6-16

FUNCTIONAL SUPERVISOR: BEHZAD GOLEMOHAMMADI

STATE OF CALIFORNIA - DEPARTMENT OF TRANSPORTATION

Caltrans

ELECTRICAL

LAST REVISION 09-22-15 | DATE PLOTTED => 15-JUL-2016 | TIME PLOTTED => 11:01

Dist	COUNTY	ROUTE	POST MILES TOTAL PROJECT	SHEET No.	TOTAL SHEETS
04	SM	82, 92	10.4/10.7, R11.0/R11.4	233	370

REGISTERED ELECTRICAL ENGINEER 2-17-16 DATE

6-28-16
PLANS APPROVAL DATE

REGISTERED PROFESSIONAL ENGINEER Kenneth Y. Xu No. 15219 Exp. 6-30-18 ELECTRICAL STATE OF CALIFORNIA

THE STATE OF CALIFORNIA OR ITS OFFICERS OR AGENTS SHALL NOT BE RESPONSIBLE FOR THE ACCURACY OR COMPLETENESS OF SCANNED COPIES OF THIS PLAN SHEET.

NOTE:

FOR ACCURATE RIGHT OF WAY DATA, CONTACT RIGHT OF WAY ENGINEERING AT THE DISTRICT OFFICE.

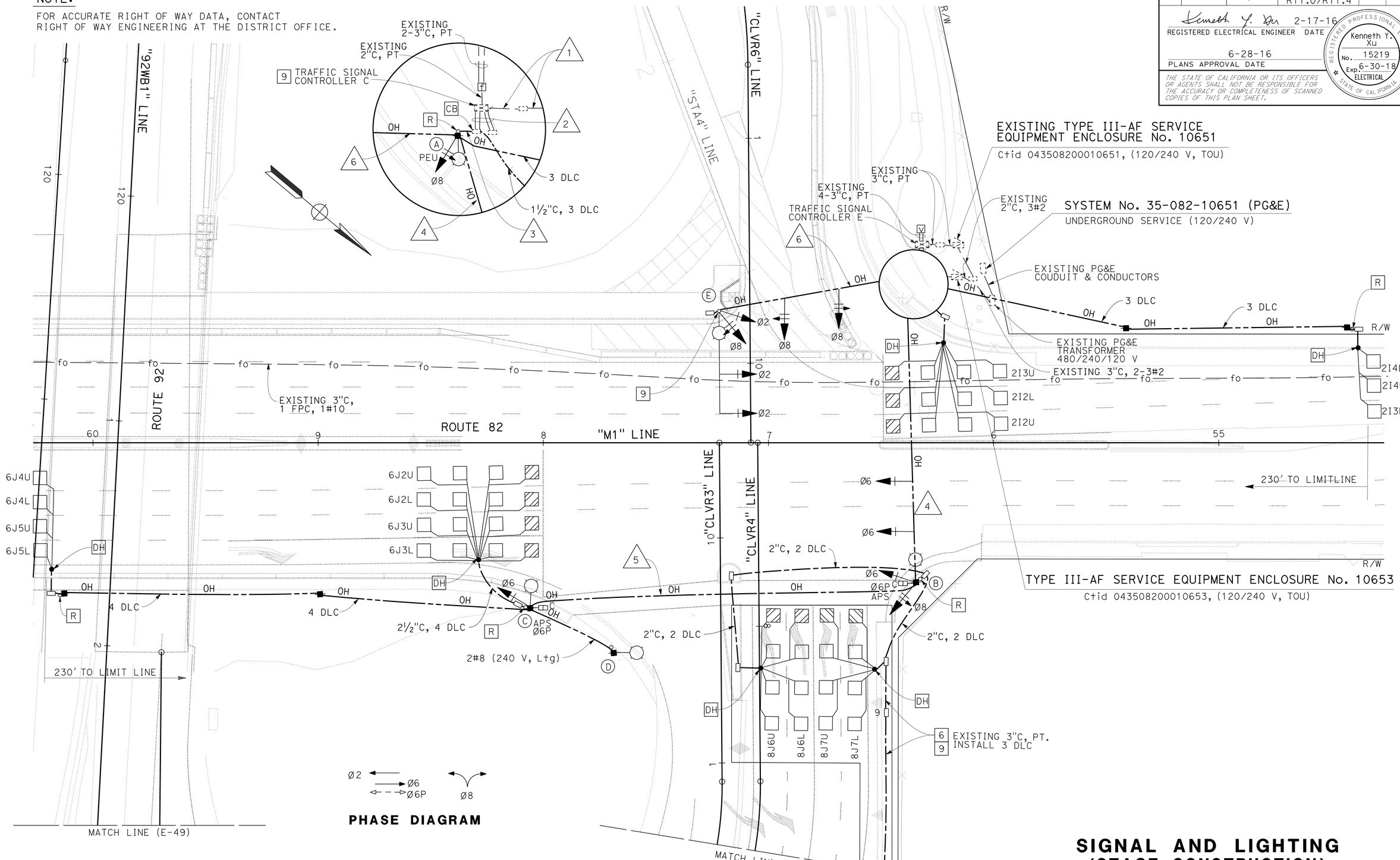

STAGE 4 PHASE 1

APPROVED FOR ELECTRICAL WORK ONLY

FOR NOTES, ABBREVIATIONS AND LEGEND, SEE SHEET E-1

SIGNAL AND LIGHTING (STAGE CONSTRUCTION)

SCALE: 1" = 20'

E-48

REVISED BY	DY
DATE REVISED	1-6-16
DORIS YANG	KENNETH Y. XU
CALCULATED-DESIGNED BY	CHECKED BY
FUNCTIONAL SUPERVISOR	BEHZAD GOLEMOHAMMADI

STATE OF CALIFORNIA - DEPARTMENT OF TRANSPORTATION

Caltrans

ELECTRICAL

LAST REVISION 09-23-15 | DATE PLOTTED => 15-JUL-2016 | TIME PLOTTED => 11:01

Dist	COUNTY	ROUTE	POST MILES TOTAL PROJECT	SHEET No.	TOTAL SHEETS
04	SM	82, 92	10.4/10.7, R11.0/R11.4	234	370

REGISTERED ELECTRICAL ENGINEER 2-17-16 DATE

6-28-16
PLANS APPROVAL DATE

REGISTERED PROFESSIONAL ENGINEER
Kenneth Y. Xu
No. 15219
Exp. 6-30-18
ELECTRICAL
STATE OF CALIFORNIA

THE STATE OF CALIFORNIA OR ITS OFFICERS OR AGENTS SHALL NOT BE RESPONSIBLE FOR THE ACCURACY OR COMPLETENESS OF SCANNED COPIES OF THIS PLAN SHEET.

NOTE:

FOR ACCURATE RIGHT OF WAY DATA, CONTACT RIGHT OF WAY ENGINEERING AT THE DISTRICT OFFICE.

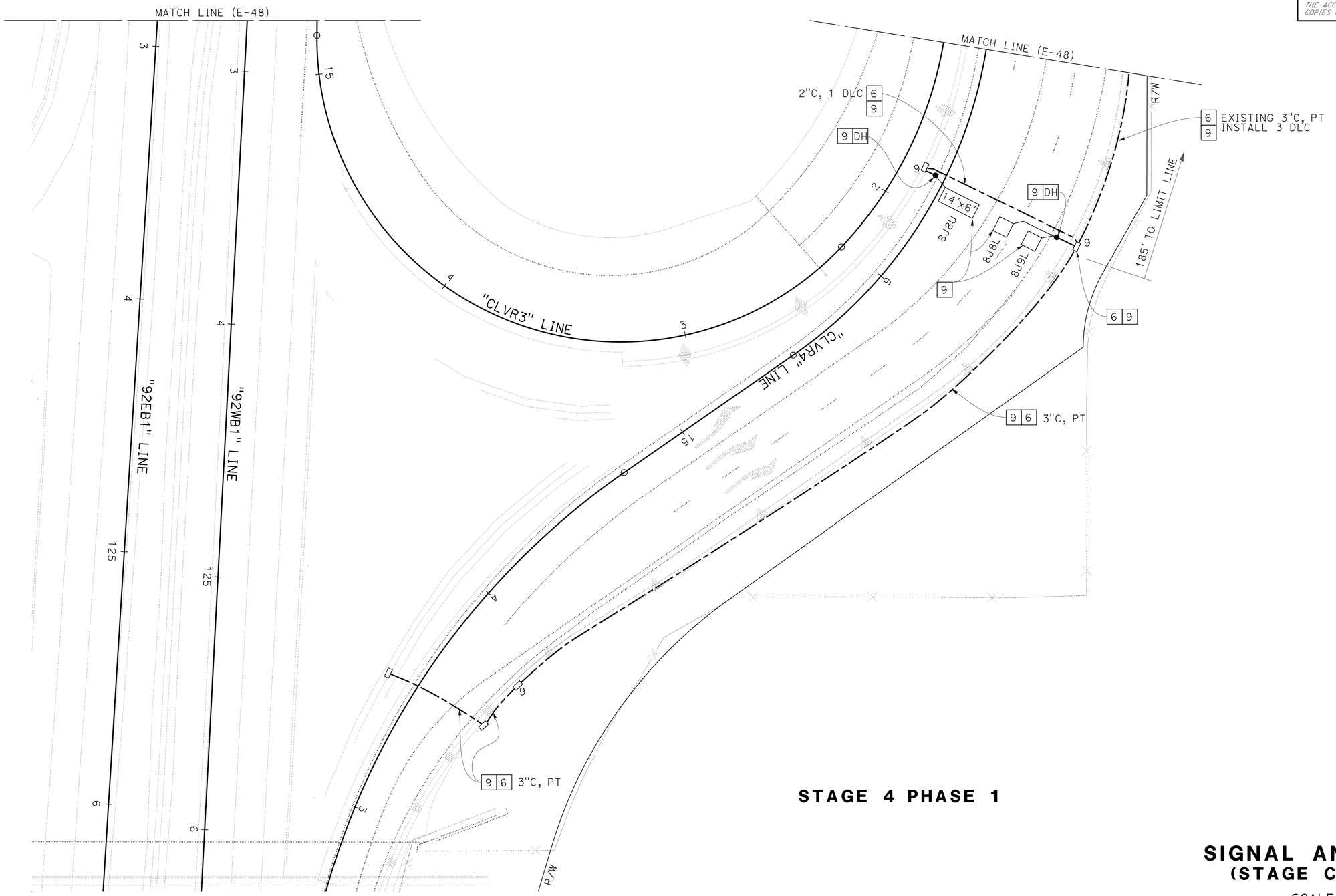

STAGE 4 PHASE 1

SIGNAL AND LIGHTING
(STAGE CONSTRUCTION)

SCALE: 1" = 20'

APPROVED FOR ELECTRICAL WORK ONLY

FOR NOTES, ABBREVIATIONS AND LEGEND, SEE SHEET E-1

E-49

REVISED BY	DY
DATE REVISED	1-6-16
CALCULATED-DESIGNED BY	DORIS YANG
CHECKED BY	KENNETH Y. XU
FUNCTIONAL SUPERVISOR	BEHZAD GOLEMOHAMMADI

STATE OF CALIFORNIA - DEPARTMENT OF TRANSPORTATION
Caltrans
ELECTRICAL

LAST REVISION 09-23-15 | DATE PLOTTED => 15-JUL-2016 TIME PLOTTED => 11:01

Dist	COUNTY	ROUTE	POST MILES TOTAL PROJECT	SHEET No.	TOTAL SHEETS
04	SM	82, 92	10.4/10.7, R11.0/R11.4	235	370

Kenneth Y. Xu 2-17-16
REGISTERED ELECTRICAL ENGINEER DATE

6-28-16
PLANS APPROVAL DATE

REGISTERED PROFESSIONAL ENGINEER Kenneth Y. Xu No. 15219 Exp. 6-30-18 ELECTRICAL STATE OF CALIFORNIA

THE STATE OF CALIFORNIA OR ITS OFFICERS OR AGENTS SHALL NOT BE RESPONSIBLE FOR THE ACCURACY OR COMPLETENESS OF SCANNED COPIES OF THIS PLAN SHEET.

CONDUCTOR SCHEDULE

CONDUCTOR DESIGNATION	NUMBER OF CONDUCTORS RUN NUMBER 1	2	3	4	5	6	7	8	9	10
No. 14 CONDUCTORS										
Ø2		3	3			3				
Ø6		3	3	3	3	3				
Ø8		3	3	3		3				
Ø6P		2			2					
APS (Ø6P)		1	1	1	1					
ASP NEUTRAL		1	1	1	1					
SPARES		3	3	3	3	3				
PEU	3	3	3							
TOTAL No. 14	3	19	17	11	10	12				
No. 8 CONDUCTORS										
LIGHTING (240 V)	2	2	2	2	2	2				
SIGNAL NEUTRAL	1	1	1	1	1	1				
TOTAL No. 8	3	3	3	3	3	3				
No. 6 CONDUCTORS										
CONTROLLER CABINET (120 V)	2									
TOTAL No. 6	2									
DETECTOR CABLES (TYPE B)										
2I2U		1	1							
2I2L		1	1							
2I3U		1	1							
2I3L		1	1							
2I4U		1	1							
2I4L		1	1							
6J2U		1	1	1	1					
6J2L		1	1	1	1					
6J3U		1	1	1	1					
6J3L		1	1	1	1					
6J4U		1	1	1	1					
6J4L		1	1	1	1					
6J5U		1	1	1	1					
6J5L		1	1	1	1					
8J6U		1	1	1	1					
8J6L		1	1	1	1					
8J7U		1	1	1	1					
8J7L		1	1	1	1					
8J8U		1	1	1	1					
8J8L		1	1	1	1					
8J9L		1	1	1	1					
TOTAL DETECTOR CABLES		21	21	15	15					
CONDUIT SIZE		4-3	4							

POLE AND EQUIPMENT SCHEDULE

LOCATION	STANDARD TYPE	SMA	LMA		VEHICLE SIGNAL MOUNTING MAST ARM	POLE	PED SIGNAL MOUNTING	APS Ø	ARROW	LED LUMINAIRE (WATTS)	SPECIAL REQUIREMENT
A	TEMPORARY WOOD POLE		15		MAS	SV-1-T				165	SEE STRUCTURE DETAIL PLAN
B	TEMPORARY WOOD POLE				MAS	SV-2-TA	SP-1-T	6	←		SEE STRUCTURE DETAIL PLAN
C	TEMPORARY WOOD POLE		15		MAS	SV-1-T	SP-1-T	6	→	165	SEE STRUCTURE DETAIL PLAN
D	TEMPORARY WOOD POLE		15		MAS					165	SEE STRUCTURE DETAIL PLAN
E	29A-5-100	45′	15		MAS	SV-2-TA				165	9

STAGE 4 PHASE 1

FOR NOTES, ABBREVIATIONS AND LEGEND, SEE SHEET E-1

SIGNAL AND LIGHTING (STAGE CONSTRUCTION)

E-50

STATE OF CALIFORNIA - DEPARTMENT OF TRANSPORTATION
Caltrans ELECTRICAL
FUNCTIONAL SUPERVISOR: BEHZAD GOLEMOHAMMADI
CALCULATED-DESIGNED BY: DORIS YANG
CHECKED BY: KENNETH Y. XU
REVISED BY: DY
DATE REVISED: 1-6-16

LAST REVISION 09-23-15
DATE PLOTTED => 15-JUL-2016
TIME PLOTTED => 11:01

Dist	COUNTY	ROUTE	POST MILES TOTAL PROJECT	SHEET No.	TOTAL SHEETS
04	SM	82, 92	10.4/10.7, R11.0/R11.4	236	370

REGISTERED ELECTRICAL ENGINEER 2-17-16 DATE

6-28-16
PLANS APPROVAL DATE

REGISTERED PROFESSIONAL ENGINEER
Kenneth Y. Xu
No. 15219
Exp. 6-30-18
ELECTRICAL
STATE OF CALIFORNIA

THE STATE OF CALIFORNIA OR ITS OFFICERS OR AGENTS SHALL NOT BE RESPONSIBLE FOR THE ACCURACY OR COMPLETENESS OF SCANNED COPIES OF THIS PLAN SHEET.

NOTE:

FOR ACCURATE RIGHT OF WAY DATA, CONTACT RIGHT OF WAY ENGINEERING AT THE DISTRICT OFFICE.

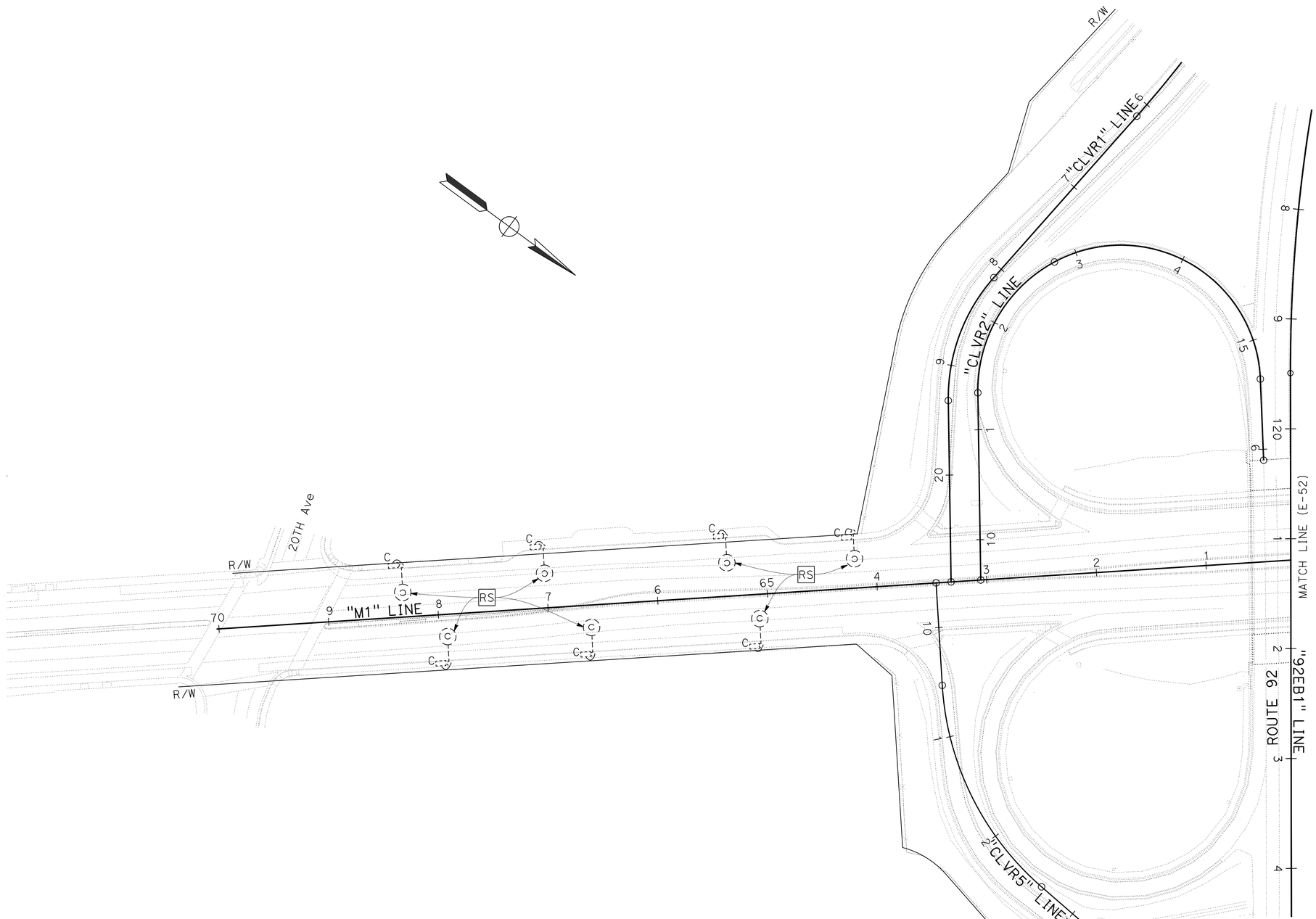

EXISTING

APPROVED FOR ELECTRICAL WORK ONLY

FOR NOTES, ABBREVIATIONS AND LEGEND, SEE SHEET E-1

LIGHTING
(CITY STREET)

SCALE: 1" = 50'

E-51

STATE OF CALIFORNIA - DEPARTMENT OF TRANSPORTATION
Caltrans
ELECTRICAL

FUNCTIONAL SUPERVISOR: BEHZAD GOLEMOHAMMADI

CALCULATED-DESIGNED BY: DORIS YANG
CHECKED BY: KENNETH Y. XU

REVISED BY: DY
DATE REVISED: 1-6-16

LAST REVISION 09-23-15
DATE PLOTTED => 15-JUL-2016
TIME PLOTTED => 11:01

Dist	COUNTY	ROUTE	POST MILES TOTAL PROJECT	SHEET No.	TOTAL SHEETS
04	SM	82, 92	10.4/10.7, R11.0/R11.4	237	370

REGISTERED ELECTRICAL ENGINEER 2-17-16 DATE

6-28-16
PLANS APPROVAL DATE

REGISTERED PROFESSIONAL ENGINEER
Kenneth Y. Xu
No. 15219
Exp. 6-30-18
ELECTRICAL
STATE OF CALIFORNIA

THE STATE OF CALIFORNIA OR ITS OFFICERS OR AGENTS SHALL NOT BE RESPONSIBLE FOR THE ACCURACY OR COMPLETENESS OF SCANNED COPIES OF THIS PLAN SHEET.

NOTE:

FOR ACCURATE RIGHT OF WAY DATA, CONTACT RIGHT OF WAY ENGINEERING AT THE DISTRICT OFFICE.

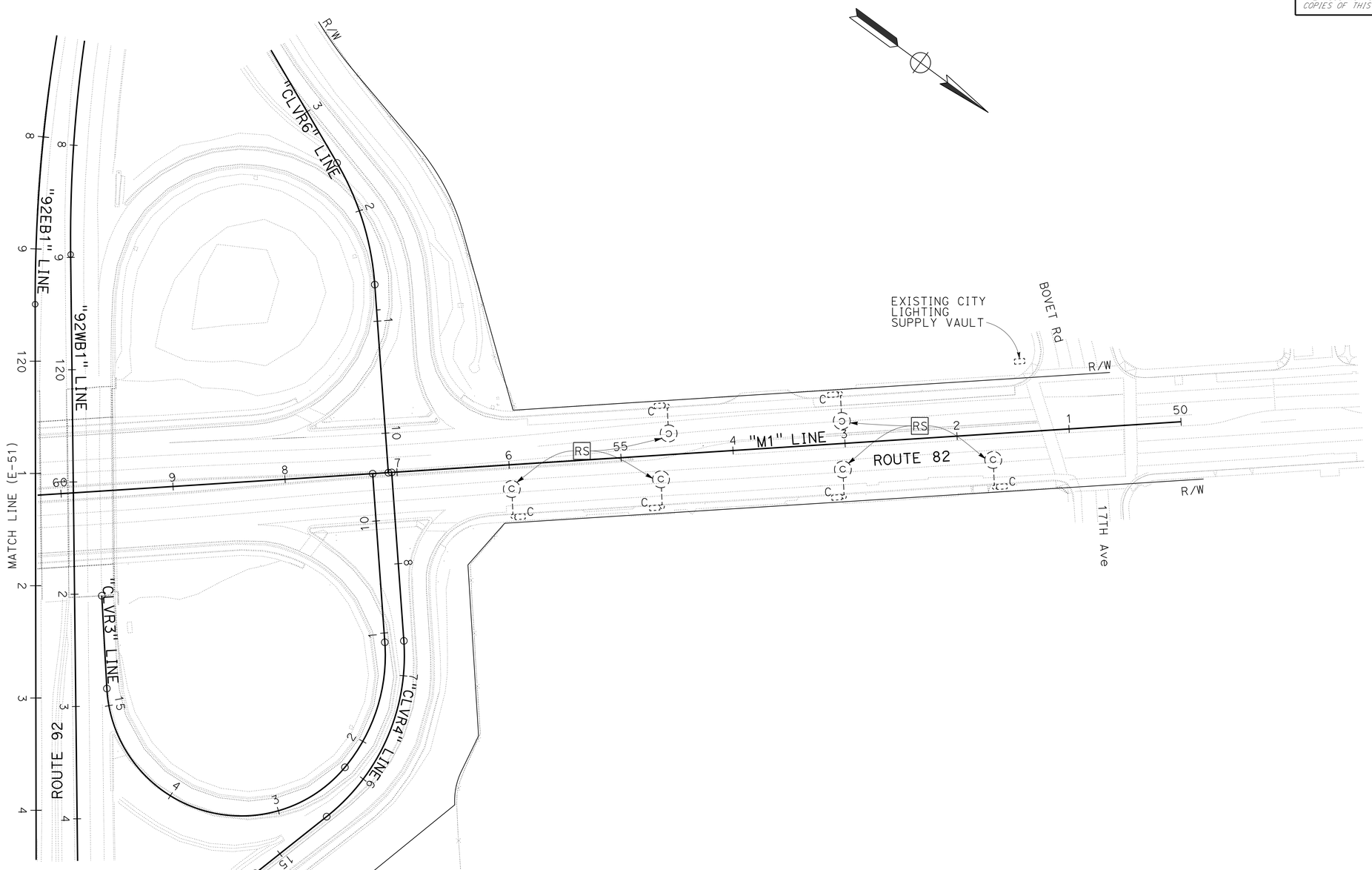

EXISTING

APPROVED FOR ELECTRICAL WORK ONLY

FOR NOTES, ABBREVIATIONS AND LEGEND, SEE SHEET E-1

LIGHTING
(CITY STREET)

SCALE: 1" = 50'

E-52

STATE OF CALIFORNIA - DEPARTMENT OF TRANSPORTATION
Caltrans
ELECTRICAL

FUNCTIONAL SUPERVISOR: BEHZAD GOLEMOHAMMADI
CALCULATED-DESIGNED BY: DORIS YANG
CHECKED BY: KENNETH Y. XU
REVISED BY: DY
DATE REVISED: 1-6-16

LAST REVISION 07-06-15
DATE PLOTTED => 15-JUL-2016
TIME PLOTTED => 11:01

Dist	COUNTY	ROUTE	POST MILES TOTAL PROJECT	SHEET No.	TOTAL SHEETS
04	SM	82, 92	10.4/10.7, R11.0/R11.4	238	370

REGISTERED ELECTRICAL ENGINEER 2-17-16 DATE

6-28-16
PLANS APPROVAL DATE

REGISTERED PROFESSIONAL ENGINEER Kenneth Y. Xu No. 15219 Exp. 6-30-18 ELECTRICAL STATE OF CALIFORNIA

THE STATE OF CALIFORNIA OR ITS OFFICERS OR AGENTS SHALL NOT BE RESPONSIBLE FOR THE ACCURACY OR COMPLETENESS OF SCANNED COPIES OF THIS PLAN SHEET.

NOTE:

FOR ACCURATE RIGHT OF WAY DATA, CONTACT RIGHT OF WAY ENGINEERING AT THE DISTRICT OFFICE.

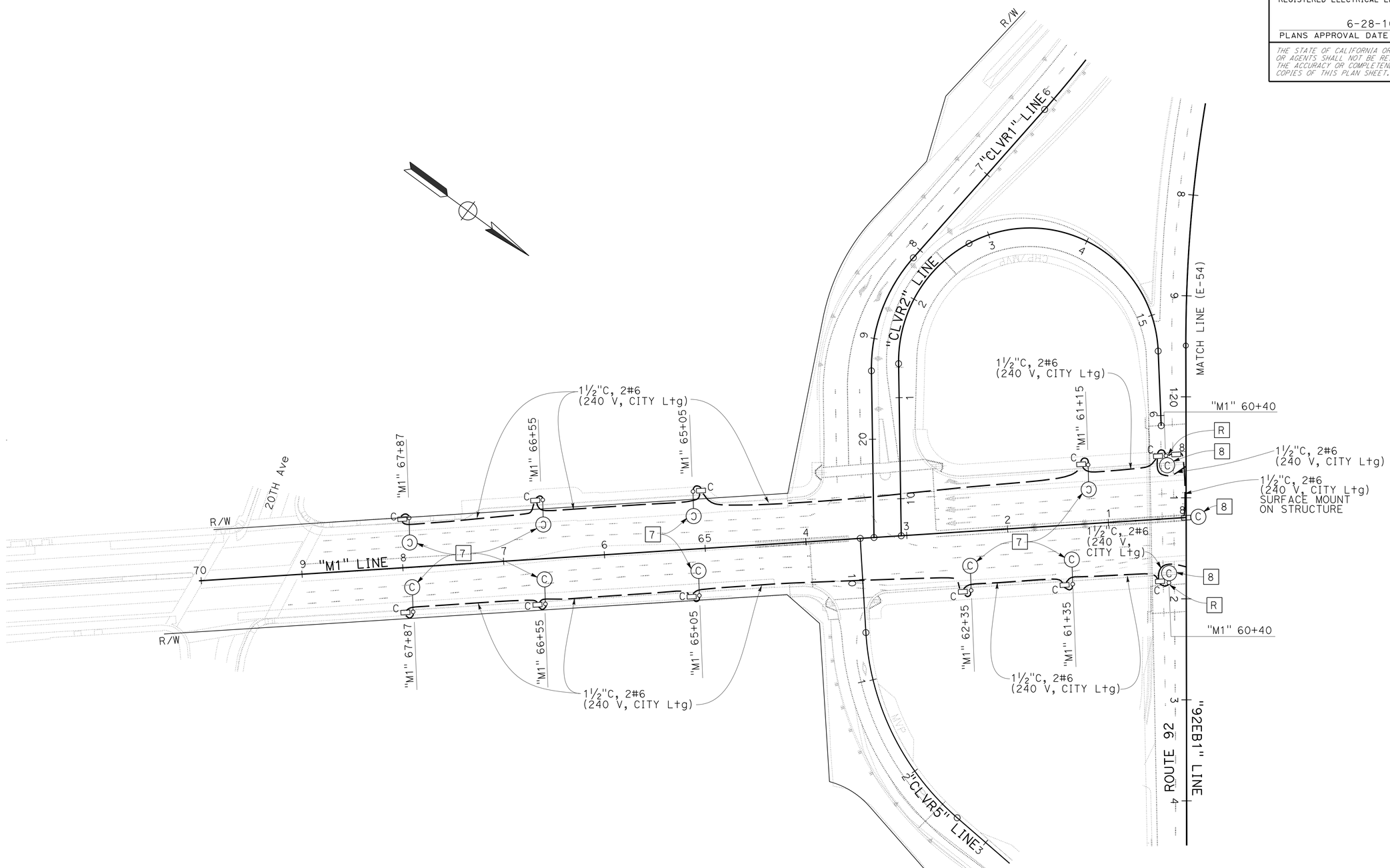

LIGHTING (CITY STREET)

SCALE: 1" = 50'

APPROVED FOR ELECTRICAL WORK ONLY

FOR NOTES, ABBREVIATIONS AND LEGEND, SEE SHEET E-1

E-53

STATE OF CALIFORNIA - DEPARTMENT OF TRANSPORTATION
Caltrans
ELECTRICAL

FUNCTIONAL SUPERVISOR: BEHZAD GOLEMOHAMMADI
CALCULATED-DESIGNED BY: DORIS YANG
CHECKED BY: KENNETH Y. XU
REVISED BY: DY
DATE REVISED: 1-6-16

LAST REVISION 03-23-16
DATE PLOTTED => 15-JUL-2016
TIME PLOTTED => 11:01

Dist	COUNTY	ROUTE	POST MILES TOTAL PROJECT	SHEET No.	TOTAL SHEETS
04	SM	82, 92	10.4/10.7, R11.0/R11.4	239	370

REGISTERED ELECTRICAL ENGINEER 2-17-16 DATE

6-28-16
PLANS APPROVAL DATE

REGISTERED PROFESSIONAL ENGINEER Kenneth Y. Xu No. 15219 Exp. 6-30-18 ELECTRICAL STATE OF CALIFORNIA

THE STATE OF CALIFORNIA OR ITS OFFICERS OR AGENTS SHALL NOT BE RESPONSIBLE FOR THE ACCURACY OR COMPLETENESS OF SCANNED COPIES OF THIS PLAN SHEET.

NOTE:

FOR ACCURATE RIGHT OF WAY DATA, CONTACT RIGHT OF WAY ENGINEERING AT THE DISTRICT OFFICE.

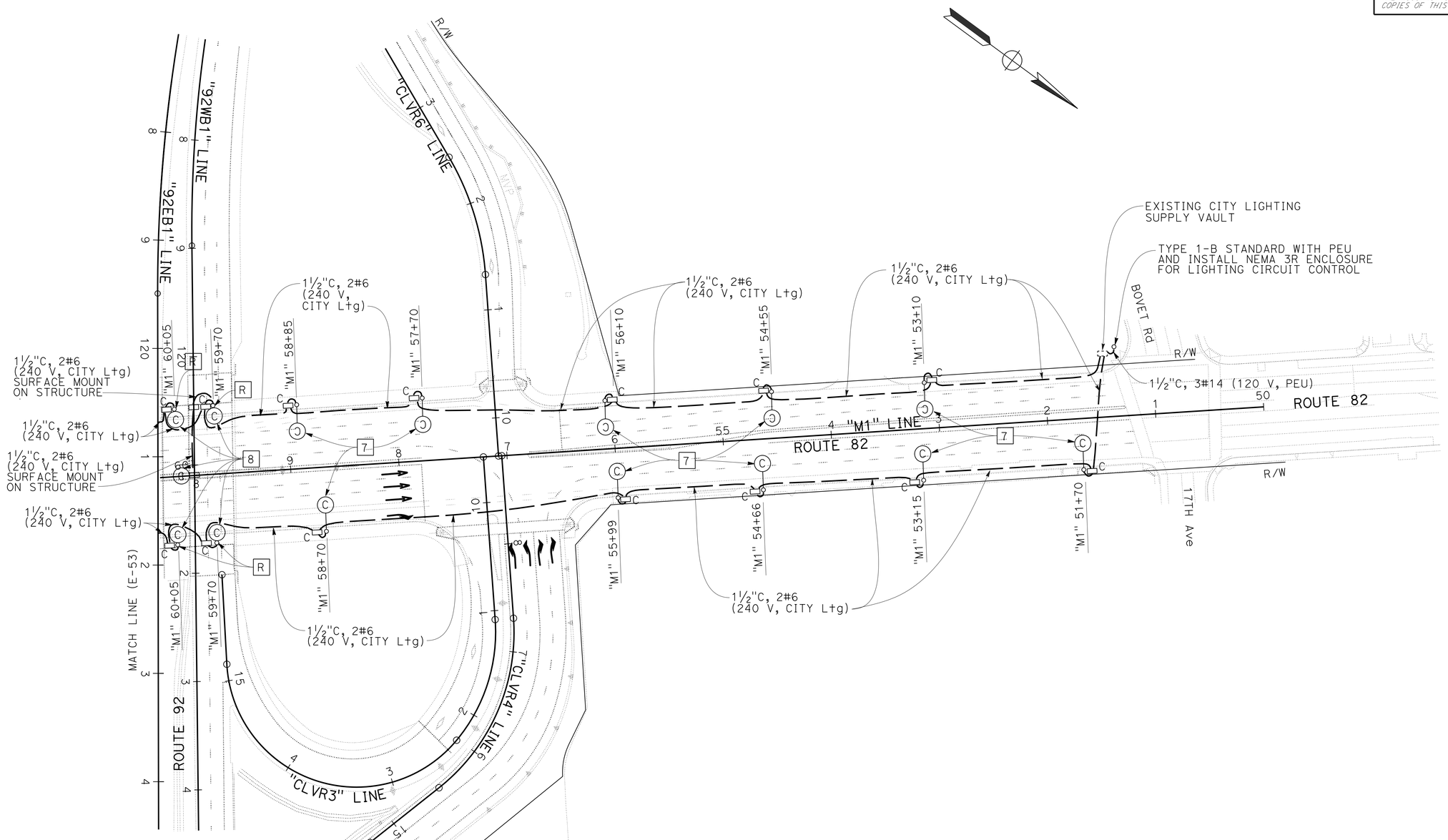

APPROVED FOR ELECTRICAL WORK ONLY

FOR NOTES, ABBREVIATIONS AND LEGEND, SEE SHEET E-1

LIGHTING
(CITY STREET)
SCALE: 1" = 50'

E-54

CALCULATED-DESIGNED BY	DORIS YANG
CHECKED BY	KENNETH Y. XU
FUNCTIONAL SUPERVISOR	BEHZAD GOLEMOHAMMADI
REVISED BY	DY
DATE REVISED	1-6-16

STATE OF CALIFORNIA - DEPARTMENT OF TRANSPORTATION
Caltrans
ELECTRICAL

LAST REVISION 03-22-16 | DATE PLOTTED => 15-JUL-2016 | TIME PLOTTED => 11:01

Dist	COUNTY	ROUTE	POST MILES TOTAL PROJECT	SHEET No.	TOTAL SHEETS
04	SM	82, 92	10.4/10.7, R11.0/R11.4	240	370

REGISTERED ELECTRICAL ENGINEER 2-17-16 DATE

6-28-16
PLANS APPROVAL DATE

REGISTERED PROFESSIONAL ENGINEER Kenneth Y. Xu No. 15219 Exp. 6-30-18 ELECTRICAL STATE OF CALIFORNIA

THE STATE OF CALIFORNIA OR ITS OFFICERS OR AGENTS SHALL NOT BE RESPONSIBLE FOR THE ACCURACY OR COMPLETENESS OF SCANNED COPIES OF THIS PLAN SHEET.

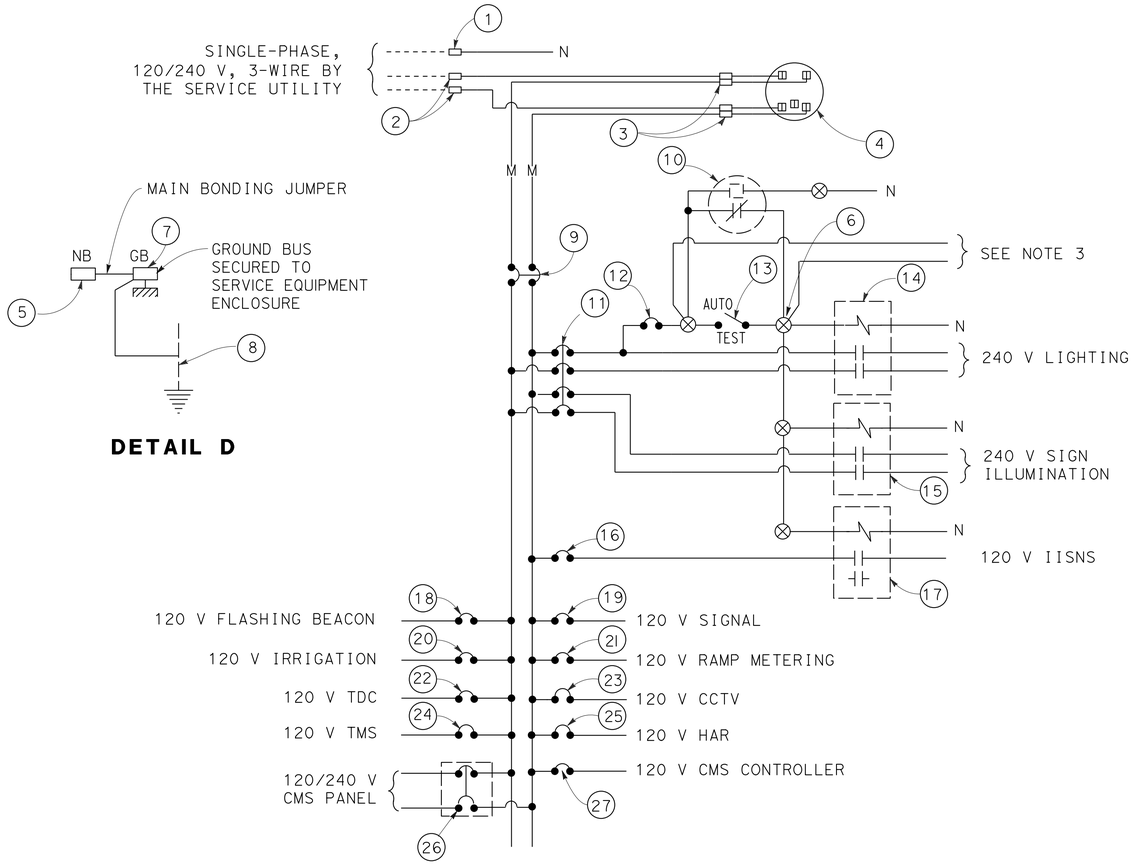

DETAIL D

DETAIL C
120/240 V SERVICE WIRING DIAGRAM (TYPICAL)

NOTES: (THIS SHEET ONLY)

1. VOLTAGE RATINGS OF SERVICE EQUIPMENT SHALL CONFORM TO THE SERVICE VOLTAGES INDICATED ON THE PLANS.
2. UNLESS OTHERWISE INDICATED ON THE PLANS, SERVICE EQUIPMENT ITEMS SHALL BE PROVIDED FOR EACH SERVICE EQUIPMENT ENCLOSURE AS SHOWN.
3. CONNECT TO REMOTE TEST SWITCH MOUNTED ON SIGN POST OR STRUCTURE WHEN REQUIRED.
4. ITEM No. (1) AND (5) SHALL BE ISOLATED FROM THE CABINET.
5. METER SOCKETS SHALL MEET SERVICE UTILITY REQUIREMENTS.
6. THE LANDING LUG SHALL BE SUITABLE FOR MULTIPLE CONDUCTORS.
7. PHOTOELECTRIC CONTROL SHALL BE TYPE II.
8. SERVICE UTILITY WILL INSTALL THE TIME-OF-USE METER IF APPLICABLE.
9. UNLESS OTHERWISE NOTED, THE MAXIMUM NUMBER OF SINGLE-POLE CIRCUIT BREAKER SPACES IN THE ENCLOSURE IS FOURTEEN.
10. SEE RSP ES-2D FOR OTHER DETAILS.

TYPE III-A SERVICE EQUIPMENT ENCLOSURE LEGEND (120/240 V)

ITEM No.	COMPONENT	NAMEPLATE DESCRIPTION	ITEM No.	COMPONENT	NAMEPLATE DESCRIPTION
1	NEUTRAL LUG		15	30 A, 2P, NO CONTACTOR	
2	LANDING LUG		16	15 A, 120 V, 1P, CB	IISNS
3	TEST BYPASS FACILITY		17	30 A, 2P, NO CONTACTOR	
4	METER SOCKET AND SUPPORT		18	15 A, 120 V, 1P, CB	FLASHING BEACON
5	NEUTRAL BUS		19	50 A, 120 V, 1P, CB	SIGNALS
6	TERMINAL BLOCK		20	20 A, 120 V, 1P, CB	IRRIGATION
7	GROUND BUS		21	30 A, 120 V, 1P, CB	RAMP METERING
8	GROUNDING ELECTRODE		22	20 A, 120 V, 1P, CB	TELEPHONE DEMARCATION CABINET
9	100 A, 240 V, 2P, CB	MAIN BREAKER	23	30 A, 120 V, 1P, CB	CCTV
10	PHOTOELECTRIC UNIT (NOTE 7)		24	30 A, 120 V, 1P, CB	TMS
11	30 A, 240 V, 4P, CB	LIGHTING AND SIGN ILLUMINATION	25	30 A, 120 V, 1P, CB	HAR
12	15 A, 120 V, 1P, CB	LIGHTING AND SIGN ILLUMINATION CONTROL	26	30 A, 240 V, 2P, CB	CMS PANEL
13	15 A, 120 V, 1P, TEST SWITCH	TEST SWITCH	27	30 A, 120 V, 1P, CB	CMS CONTROLLER
14	60 A, 2P, NO CONTACTOR				

ELECTRICAL DETAILS

NO SCALE

E-55

REVISED BY	DATE REVISED
DY	1-6-16

DORIS YANG — KENNETH Y. XU — CALCULATED-DESIGNED BY — CHECKED BY

FUNCTIONAL SUPERVISOR: BEHZAD GOLEMOHAMMADI

STATE OF CALIFORNIA - DEPARTMENT OF TRANSPORTATION — Caltrans — ELECTRICAL

LAST REVISION 09-23-15 — DATE PLOTTED => 15-JUL-2016 — TIME PLOTTED => 11:01

Dist	COUNTY	ROUTE	POST MILES TOTAL PROJECT	SHEET No.	TOTAL SHEETS
04	SM	82, 92	10.4/10.7, R11.0/R11.4,	241	370

REGISTERED CIVIL ENGINEER 1-14-16 DATE

6-28-16
PLANS APPROVAL DATE

REGISTERED PROFESSIONAL ENGINEER Hossein Khodabakhsh No. 71650 Exp. 12-31-17 CIVIL STATE OF CALIFORNIA

THE STATE OF CALIFORNIA OR ITS OFFICERS OR AGENTS SHALL NOT BE RESPONSIBLE FOR THE ACCURACY OR COMPLETENESS OF SCANNED COPIES OF THIS PLAN SHEET.

NOTE:

1. THE EXISTING REINFORCEMENT CANNOT BE DAMAGED OR CUT. IN CASE THESE REINFORCEMENT IS CUT OR DAMAGED, DRILL AND BOND EQUAL NUMBER OF REBAR TO EXISTING BARRIER.

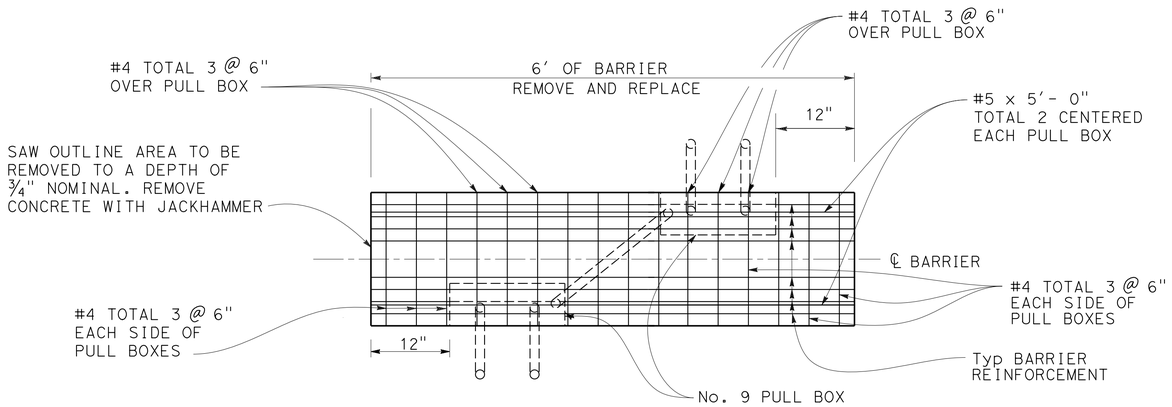

PLAN

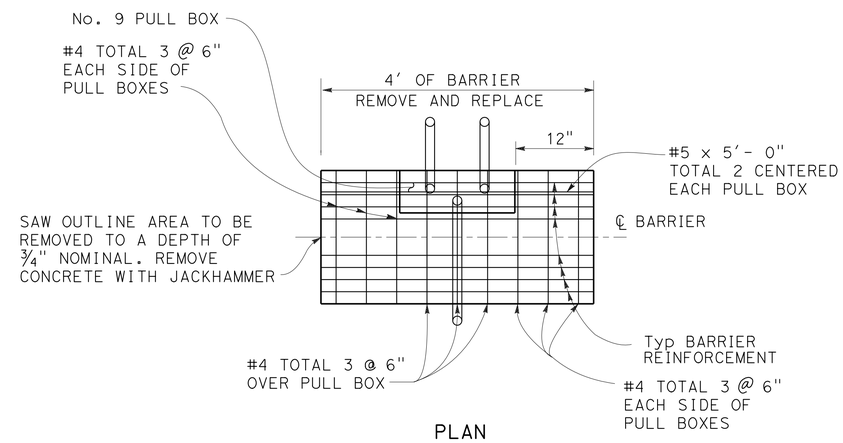

PLAN

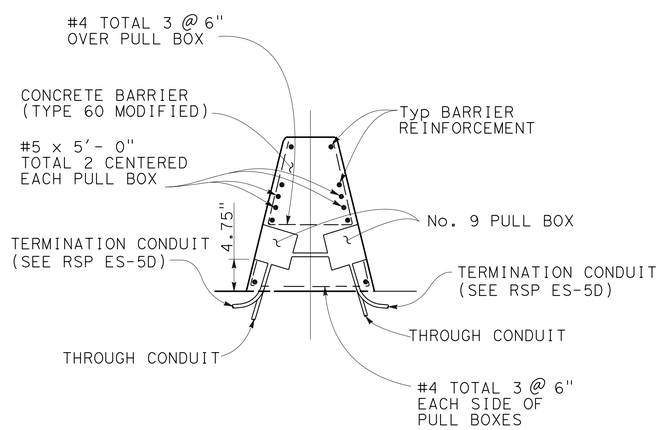

CONDUIT AND No. 9 DOUBLE PULL BOX INSTALLATION IN MEDIAN BARRIER

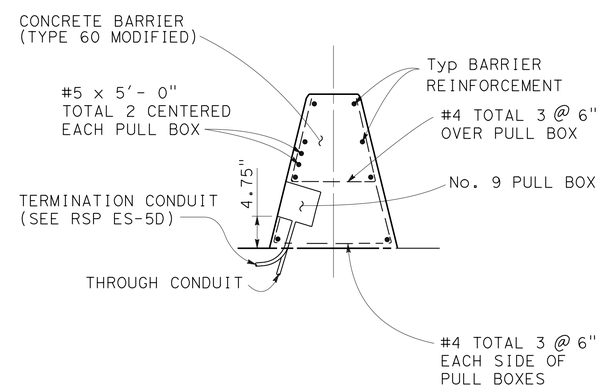

CONDUIT AND No. 9 SINGLE PULL BOX INSTALLATION IN MEDIAN BARRIER

ELECTRICAL DETAILS
(TRAFFIC OPERATION SYSTEMS)

NO SCALE

E-56

STATE OF CALIFORNIA - DEPARTMENT OF TRANSPORTATION
Caltrans DESIGN

FUNCTIONAL SUPERVISOR: ABOLFAZL EMADZADEH

CALCULATED-DESIGNED BY: HOSSEIN KHODABAKHSH
CHECKED BY: ABOLFAZL EMADZADEH

REVISED BY: HK
DATE REVISED: 8-26-15

LAST REVISION 03-08-16 | DATE PLOTTED => 15-JUL-2016 | TIME PLOTTED => 11:01

Dist	COUNTY	ROUTE	POST MILES TOTAL PROJECT	SHEET No.	TOTAL SHEETS
04	SM	82, 92	10.4/10.7, R11.0/R11.4	242	370

REGISTERED ELECTRICAL ENGINEER 2-17-16 DATE

6-28-16
PLANS APPROVAL DATE

REGISTERED PROFESSIONAL ENGINEER
Kenneth Y. Xu
No. 15219
Exp. 6-30-18
ELECTRICAL
STATE OF CALIFORNIA

THE STATE OF CALIFORNIA OR ITS OFFICERS OR AGENTS SHALL NOT BE RESPONSIBLE FOR THE ACCURACY OR COMPLETENESS OF SCANNED COPIES OF THIS PLAN SHEET.

NOTES:

1. WELDING MUST COMPLY WITH STANDARD SPECIFICATION SECTION 75.
2. CONDUITS ENTERING THE PULL BOX MUST BE ENCASED IN PCC (3" ALL AROUND). PCC ENCASEMENT MUST EXTEND 5'-6" FROM THE PULL BOX.
3. PULL BOXES FOR ELECTROLIERS, POST AND SIGNAL STANDARDS MUST BE LOCATED WITHIN 5'-0" FROM THE STATION OF THE ADJACENT ELECTROLIER, POST OR SIGNAL STANDARD.
4. FOR ADDITIONAL NOTES AND DETAILS, SEE RSP ES-8B.

WELD PLATE COVER TO E-BAR FRAME WITH A MINIMUM 3" WELD, SEE NOTE 1.

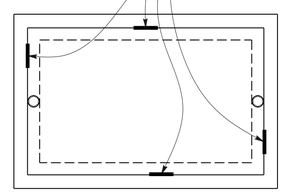

TOP VIEW
TRAFFIC PULL BOX WELDING DETAIL

ELECTRICAL DETAILS

NO SCALE

E-57

REVISED BY	DY
DATE REVISED	1-6-16
DORIS YANG	KENNETH Y. XU
CALCULATED-DESIGNED BY	
CHECKED BY	
FUNCTIONAL SUPERVISOR	BEHZAD GOLEMOHAMMADI

STATE OF CALIFORNIA - DEPARTMENT OF TRANSPORTATION
Caltrans®
ELECTRICAL

LAST REVISION 09-23-15
DATE PLOTTED => 15-JUL-2016
TIME PLOTTED => 11:01

Dist	COUNTY	ROUTE	POST MILES TOTAL PROJECT	SHEET No.	TOTAL SHEETS
04	SM	82, 92	10.4/10.7, R11.0/R11.4	243	370

REGISTERED ELECTRICAL ENGINEER 2-17-16 DATE

6-28-16
PLANS APPROVAL DATE

REGISTERED PROFESSIONAL ENGINEER Kenneth Y. Xu No. 15219 Exp. 6-30-18 ELECTRICAL STATE OF CALIFORNIA

THE STATE OF CALIFORNIA OR ITS OFFICERS OR AGENTS SHALL NOT BE RESPONSIBLE FOR THE ACCURACY OR COMPLETENESS OF SCANNED COPIES OF THIS PLAN SHEET.

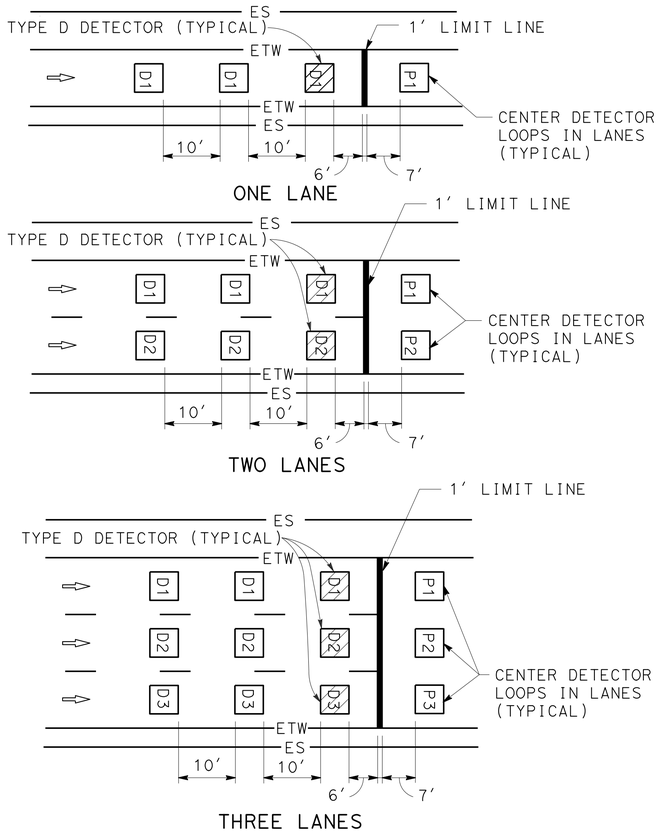

DETAIL "RM"
RAMP METERING STATION

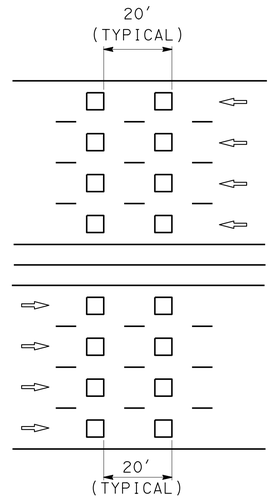

TRAFFIC MONITORING STATION NOTES

FREEWAY MAINLINE DETECTOR DESIGNATION:

N=NORTHBOUND LANES (NB)
S=SOUTHBOUND LANES (SB)
E=EASTBOUND LANES (EB)
W=WESTBOUND LANES (WB)

NUMBER OF LANES FROM LEFT WITH RESPECT TO DIRECTION OF TRAFFIC:

1=FIRST LANE FROM LEFT
2=SECOND LANE FROM LEFT
3=THIRD LANE FROM LEFT
4=FOURTH LANE FROM LEFT

NUMBER OF DETECTOR IN THE SAME LANE:

1=ENTERING DETECTOR
2=LEAVING DETECTOR

N 3-2

DETAIL "TM"
TRAFFIC MONITORING STATION

RAMP METERING STATION NOTES:

1. SEE RSP ES-5A, ES-5B, AND ES-13A FOR ADDITIONAL DETAILS.
2. DLC CONDUCTORS MUST BE SPLICED TO THE LOOP CONDUCTORS IN THE NEAREST PULL BOX.
3. ALL SPLICES MUST BE TYPE "S" OR TYPE "ST" AS REQUIRED.
4. LOCATION OF TYPE 1 STANDARDS MUST BE APPROXIMATELY 3 FEET FROM THE EDGE OF SHOULDER AND 12 INCHES DOWNSTREAM OF THE LIMIT LINE.

RAMP DETECTOR DESIGNATION:

D=DEMAND DETECTOR
P=PASSAGE DETECTOR
Q=QUEUE DETECTOR
F=OFF-RAMP DETECTOR

1=FIRST LANE FROM LEFT
2=SECOND LANE FROM LEFT

D-2

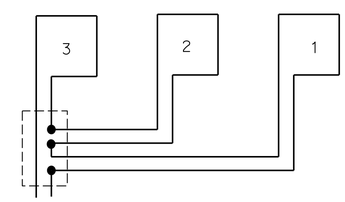

TYPICAL LOOP CONNECTIONS

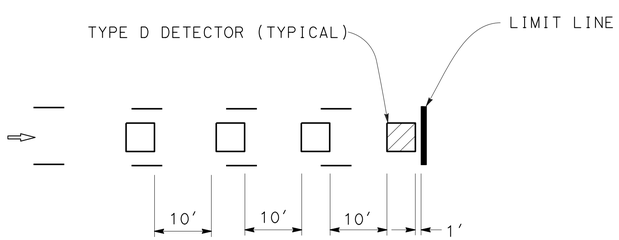

DETAIL "SIG"
INTERSECTION SIGNAL

INTERSECTION SIGNAL LOOP PLACEMENT

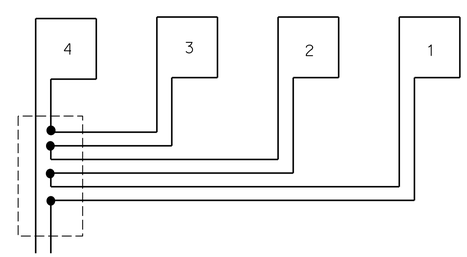

TYPICAL LOOP CONNECTIONS

ELECTRICAL DETAILS

NO SCALE

E-58

STATE OF CALIFORNIA - DEPARTMENT OF TRANSPORTATION	Caltrans®
ELECTRICAL	
FUNCTIONAL SUPERVISOR	BEHZAD GOLEMOHAMMADI
CALCULATED-DESIGNED BY	DORIS YANG
CHECKED BY	KENNETH Y. XU
REVISED BY	DY
DATE REVISED	1-6-16

LAST REVISION 09-23-15 | DATE PLOTTED => 15-JUL-2016 | TIME PLOTTED => 11:01

Dist	COUNTY	ROUTE	POST MILES TOTAL PROJECT	SHEET No.	TOTAL SHEETS
04	SM	82, 92	10.4/10.7, R11.0/R11.4	244	370

Kenneth Y. Xu 2-17-16
REGISTERED ELECTRICAL ENGINEER DATE

6-28-16
PLANS APPROVAL DATE

REGISTERED PROFESSIONAL ENGINEER
Kenneth Y. Xu
No. 15219
Exp. 6-30-18
ELECTRICAL
STATE OF CALIFORNIA

THE STATE OF CALIFORNIA OR ITS OFFICERS OR AGENTS SHALL NOT BE RESPONSIBLE FOR THE ACCURACY OR COMPLETENESS OF SCANNED COPIES OF THIS PLAN SHEET.

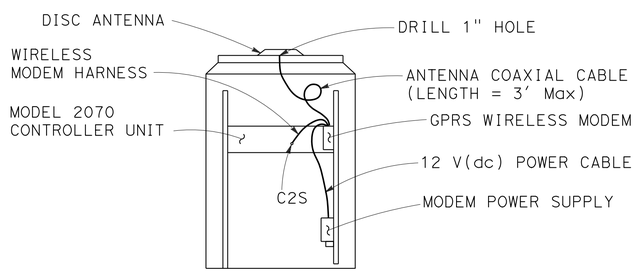

GPRS WIRELESS MODEM AND ANTENNA INSTALLATION DETAIL

REAR VIEW OF THE MODEL 334 CONTROLLER CABINET

NOTES:

1. PROVIDE THE GPRS MODEM AND WIRELESS MODEM HARNESS TO THE ENGINEER 30 WORKING DAYS BEFORE INSTALLATION. THE ENGINEER WILL RETURN THE PROGRAMMED MODEM, WITH PDP CONTEXT AND APN, AND HARNESS WITHIN 15 WORKING DAYS.
2. DRILL 1" HOLE THROUGH THE TOP OF THE CABINET. ATTACH THE ANTENNA ON THE CABINET AS DIRECTED BY THE MANUFACTURER.
3. MOUNT THE MODEM UNIT ON THE CABINET REAR MOUNTING RAIL WITH MOUNTING BRACKET PROVIDED BY THE MANUFACTURER.
4. MOUNT THE MODEM 12 V (dc) POWER SUPPLY DIRECTLY TO CABINET.
5. CONNECT POWER CABLE TO 12 V (dc) POWER ADAPTER.
6. CONNECT THE ANTENNA COAXIAL CABLE TO THE MODEM.
7. CONNECT MODEM HARNESS BETWEEN THE MODEM AND THE MODEL 170 CONTROLLER UNIT AS SHOWN.
8. RECORD THE SERIAL NUMBER OF THE MODEM ON THE CHECK LIST SHEET.

COMMUNICATION SERIAL CABLE (TYPE D)

1. PIN OUT DIAGRAM

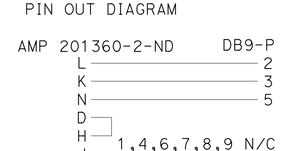

2. CONSTRUCT AND INSTALL COMMUNICATION CABLE. SEE SPECIAL PROVISIONS FOR CABLE TYPE AND OTHER INFORMATION.

GENERAL PACKET RADIO SYSTEM (WIRELESS MODEM INSTALLATION DETAILS)

ELECTRICAL DETAILS

NO SCALE

E-59

REVISED BY	DY
DATE REVISED	1-6-16
DORIS YANG	KENNETH Y. XU
CALCULATED-DESIGNED BY	
CHECKED BY	
FUNCTIONAL SUPERVISOR	BEHZAD GOLEMOHAMMADI

STATE OF CALIFORNIA - DEPARTMENT OF TRANSPORTATION
Caltrans
ELECTRICAL

LAST REVISION 09-23-15 | DATE PLOTTED => 15-JUL-2016 | TIME PLOTTED => 11:01

Dist	COUNTY	ROUTE	POST MILES TOTAL PROJECT	SHEET No.	TOTAL SHEETS
04	SM	82, 92	10.4/10.7, R11.0/R11.4	245	370

REGISTERED ELECTRICAL ENGINEER 2-17-16 DATE

6-28-16
PLANS APPROVAL DATE

REGISTERED PROFESSIONAL ENGINEER Kenneth Y. Xu No. 15219 Exp. 6-30-18 ELECTRICAL STATE OF CALIFORNIA

THE STATE OF CALIFORNIA OR ITS OFFICERS OR AGENTS SHALL NOT BE RESPONSIBLE FOR THE ACCURACY OR COMPLETENESS OF SCANNED COPIES OF THIS PLAN SHEET.

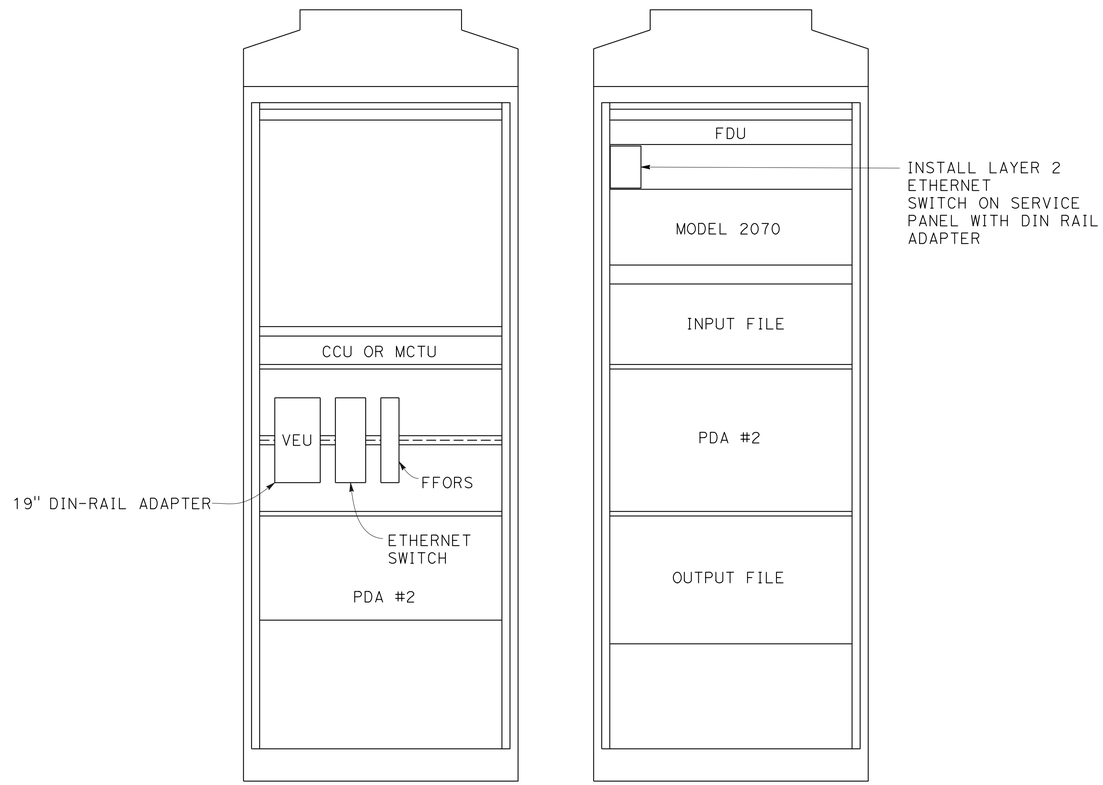

TYPE 334T LAYOUT CABINET E,G,J

NEW TYPE 332L AND 334L CABINET LAYOUT CABINET C,D,F,H,I,K

FIBER OPTIC SYSTEM/INTERCONNECTION (COMMUNICATIONS SYSTEM LAYOUT)

ELECTRICAL DETAILS

NO SCALE

E-60

STATE OF CALIFORNIA - DEPARTMENT OF TRANSPORTATION
Caltrans
ELECTRICAL

FUNCTIONAL SUPERVISOR: BEHZAD GOLEMOHAMMADI
CALCULATED-DESIGNED BY: DORIS YANG
CHECKED BY: KENNETH Y. XU
REVISED BY: DY
DATE REVISED: 1-6-16

LAST REVISION 01-06-16
DATE PLOTTED => 15-JUL-2016
TIME PLOTTED => 11:01

Dist	COUNTY	ROUTE	POST MILES TOTAL PROJECT	SHEET No.	TOTAL SHEETS
04	SM	82, 92	10.4/10.7, R11.0/R11.4	246	370

REGISTERED ELECTRICAL ENGINEER 2-17-16 DATE

6-28-16
PLANS APPROVAL DATE

REGISTERED PROFESSIONAL ENGINEER Kenneth Y. Xu No. 15219 Exp. 6-30-18 ELECTRICAL STATE OF CALIFORNIA

THE STATE OF CALIFORNIA OR ITS OFFICERS OR AGENTS SHALL NOT BE RESPONSIBLE FOR THE ACCURACY OR COMPLETENESS OF SCANNED COPIES OF THIS PLAN SHEET.

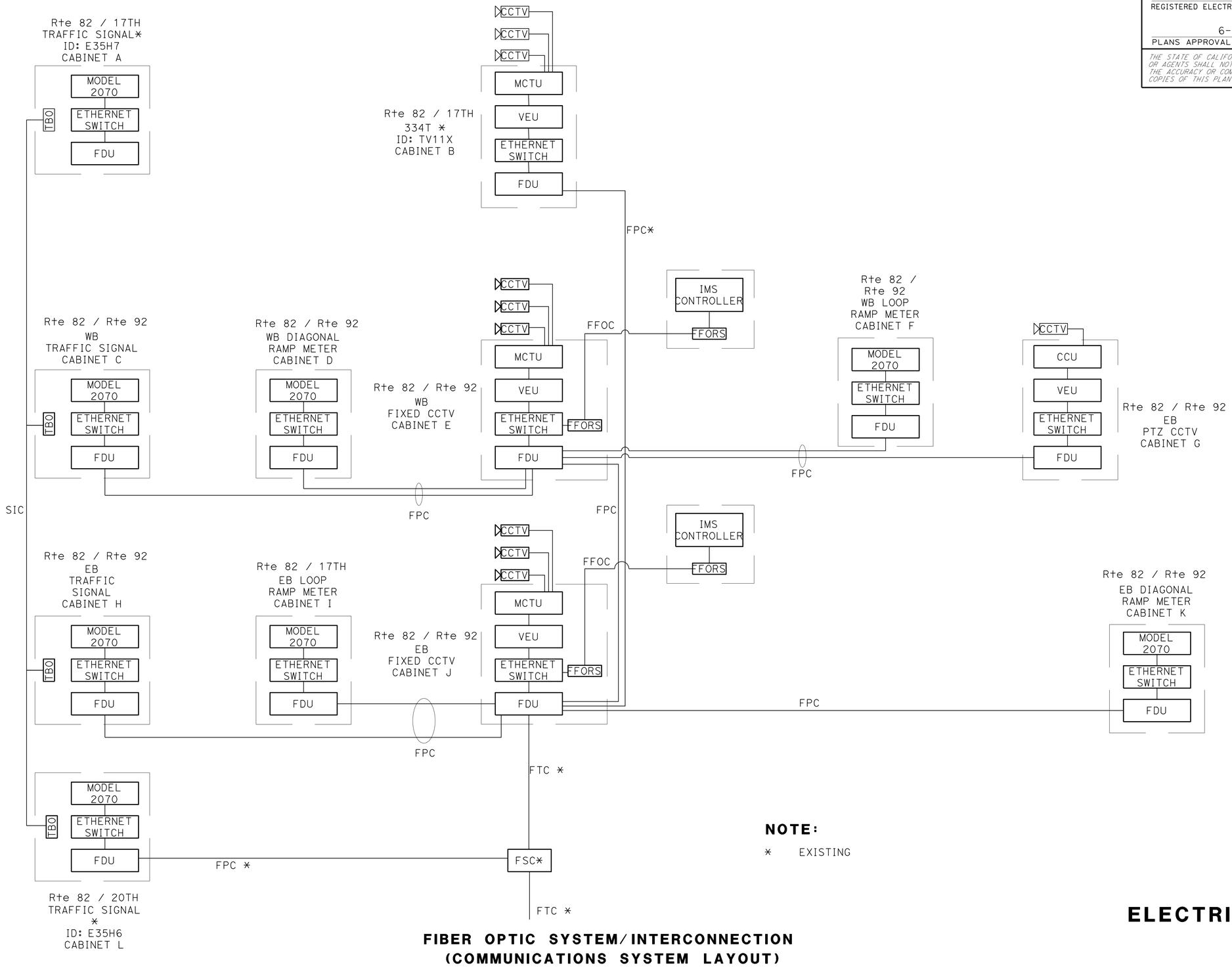

NOTE:

* EXISTING

FIBER OPTIC SYSTEM/INTERCONNECTION
(COMMUNICATIONS SYSTEM LAYOUT)

ELECTRICAL DETAILS

NO SCALE

E-61

REVISED BY	DATE REVISED
DY	1-6-16

DORIS YANG
KENNETH Y. XU

CALCULATED-DESIGNED BY
CHECKED BY

FUNCTIONAL SUPERVISOR
BEHZAD GOLEMOHAMMADI

STATE OF CALIFORNIA - DEPARTMENT OF TRANSPORTATION
Caltrans
ELECTRICAL

LAST REVISION 09-23-15
DATE PLOTTED => 15-JUL-2016
TIME PLOTTED => 11:01

Dist	COUNTY	ROUTE	POST MILES TOTAL PROJECT	SHEET No.	TOTAL SHEETS
04	SM	82, 92	10.4/10.7, R11.0/R11.4	247	370

REGISTERED ELECTRICAL ENGINEER 2-17-16 DATE

6-28-16
PLANS APPROVAL DATE

REGISTERED PROFESSIONAL ENGINEER Kenneth Y. Xu No. 15219 Exp. 6-30-18 ELECTRICAL STATE OF CALIFORNIA

THE STATE OF CALIFORNIA OR ITS OFFICERS OR AGENTS SHALL NOT BE RESPONSIBLE FOR THE ACCURACY OR COMPLETENESS OF SCANNED COPIES OF THIS PLAN SHEET.

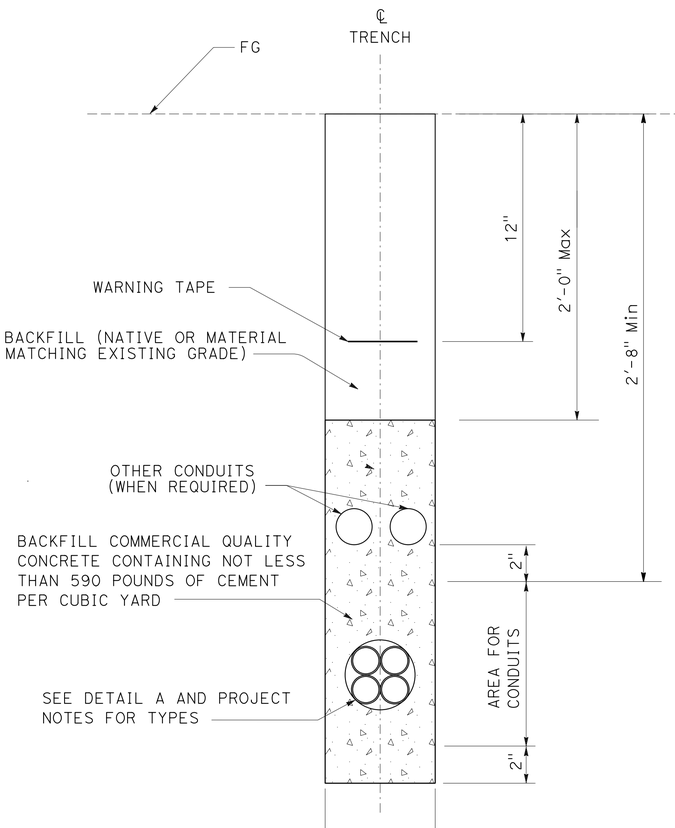

TRENCH IN DIRT
DETAIL TD

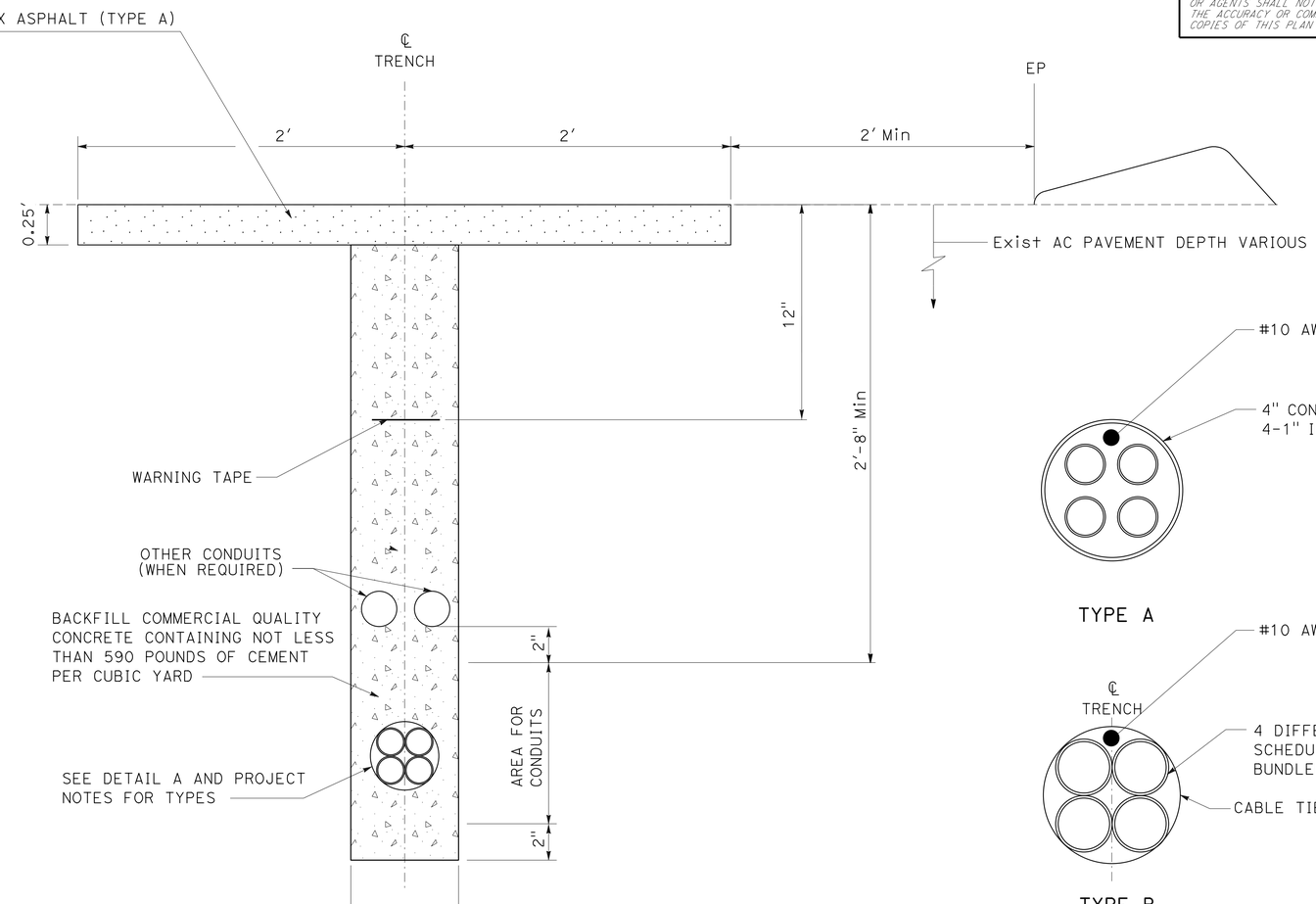

TRENCH IN PAVEMENT
DETAIL TP
(NOT USE ON FREEWAY RAMP, FREEWAY LANE OR FREEWAY TO FREEWAY CONNECTOR RAMP)

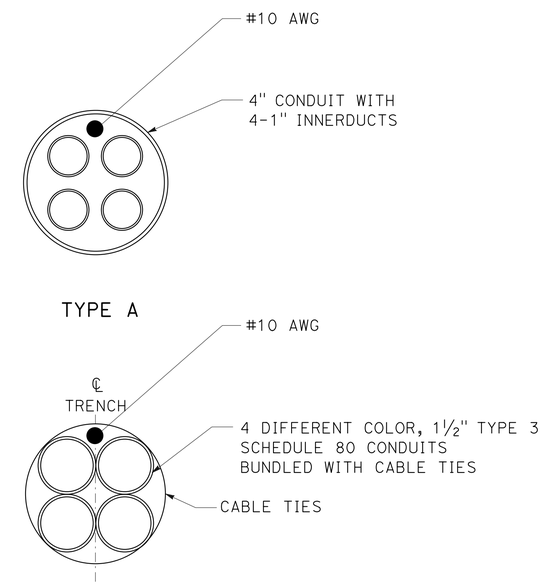

MULTI CONDUIT (Typ)
DETAIL A

(FIBER OPTIC CONDUIT AND TRENCH DETAILS)

ELECTRICAL DETAILS

NO SCALE

E-62

REVISED BY	DATE REVISED
DY	1-6-16

CALCULATED-DESIGNED BY: DORIS YANG
CHECKED BY: KENNETH Y. XU
FUNCTIONAL SUPERVISOR: BEHZAD GOLEMOHAMMADI

STATE OF CALIFORNIA - DEPARTMENT OF TRANSPORTATION
Caltrans
ELECTRICAL

LAST REVISION 09-23-15
DATE PLOTTED => 15-JUL-2016
TIME PLOTTED => 11:01

Dist	COUNTY	ROUTE	POST MILES TOTAL PROJECT	SHEET No.	TOTAL SHEETS
04	SM	82, 92	10.4/10.7, R11.0/R11.4	248	370

REGISTERED ELECTRICAL ENGINEER 2-17-16 DATE

6-28-16
PLANS APPROVAL DATE

REGISTERED PROFESSIONAL ENGINEER Kenneth Y. Xu No. 15219 Exp. 6-30-18 ELECTRICAL STATE OF CALIFORNIA

THE STATE OF CALIFORNIA OR ITS OFFICERS OR AGENTS SHALL NOT BE RESPONSIBLE FOR THE ACCURACY OR COMPLETENESS OF SCANNED COPIES OF THIS PLAN SHEET.

NOTES:

1. PLACE PORTLAND CEMENT CONCRETE FLOOR OVER CLEAN CRUSHED ROCK SUMP. BOTTOM OF PULL BOX MUST BE SLOPED TOWARDS DRAIN PIPE FOR DRAINAGE AND MUST HAVE SMOOTH FINISH.
2. CONCRETE MUST CONTAIN A MINIMUM OF 550 lb OF PORTLAND CEMENT PER CUBIC YARD.
3. PULL BOX MUST BE PRECAST OF STEEL REINFORCED PORTLAND CEMENT CONCRETE. PULL BOX COVER MUST BE POLYMER CONCRETE. PULL BOX AND COVER MUST SUPPORT MINIMUM TEST LOAD OF 25,000 lb. IF BOX IS LOCATED IN TRAVEL WAY, PULL BOX AND COVER MUST CONFORM VERTICAL PROOF-LOAD STRENGTH REQUIREMENT, SECTION 86-2.06C.
4. SEE RSP ES-8A FOR PULL BOX COVER CAPTIVE BOLT AND PULL BOX THREADED INSERT DETAILS.
5. MARK "CALTRANS TOS COMMUNICATIONS" ON THE TOP FACE OF ALL COVERS.
6. MINIMUM PULL BOX DEPTH WITH EXTENSION MUST BE 20".
7. CONDUITS MUST ENTER THROUGH KNOCKOUTS. IF MORE THAN 3 CONDUITS ARE REQUIRED IN SAME KNOCKOUT, KNOCKOUT MUST BE WIDENED TO 3/8" MORE THAN THE CONDUIT COMBINATION.
8. CONDUIT FROM THE TYPICAL BORE OR TRENCH SECTION MUST NOT DEFLECT BY MORE THAN 1′ PER 10′ FROM THE ALIGNMENT PRECEDING OR THE FOLLOWING THE PULL BOX.
9. BOTTOM OF CONDUIT CENTERLINE MUST BE ALIGNED TO THE TOP OF PULL BOX TO FACILITATE CABLE PULLING. IF EXISTING CONDUIT USED, MODIFY CONDUIT SWEEP (IF NEEDED) AS SHOWN. IF NEW CONDUIT IS USED, INSTALL CONDUIT ELBOW AS SHOWN.
10. PROVIDE PERMANENT MARKERS FOR CONDUITS AND PULL BOXES CONTAINING FIBER OPTIC CABLE.

LEGEND:

(1) 45 DEGREE ELBOW, 3′ RADIUS MINIMUM. ELBOW AND COUPLING MAY NOT BE NECESSARY FOR NEW CONDUIT INSTALLED BY DIRECTIONAL BORING. NEW CONDUIT INSTALLED BY DIRECTIONAL BORING MUST ENTER THE PULL BOX WITH BENDING RADIUS OF 3′ MINIMUM.

(2) WARNING TAPE (FOR NEW CONDUIT IF INSTALLED BY TRENCHING).

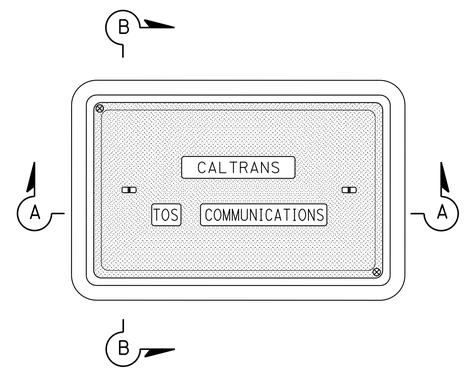

PLAN VIEW

SEE RSP ES-8A COVER TOP VIEW FOR OTHER DETAILS

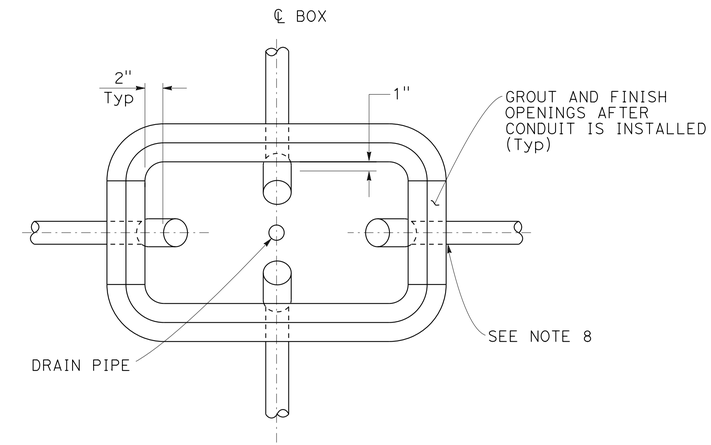

PLAN VIEW

WITHOUT COVER

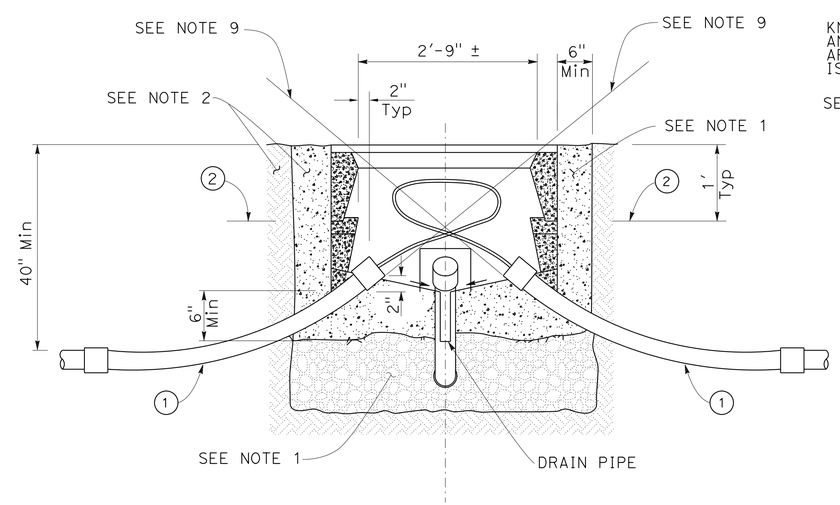

SECTION A-A

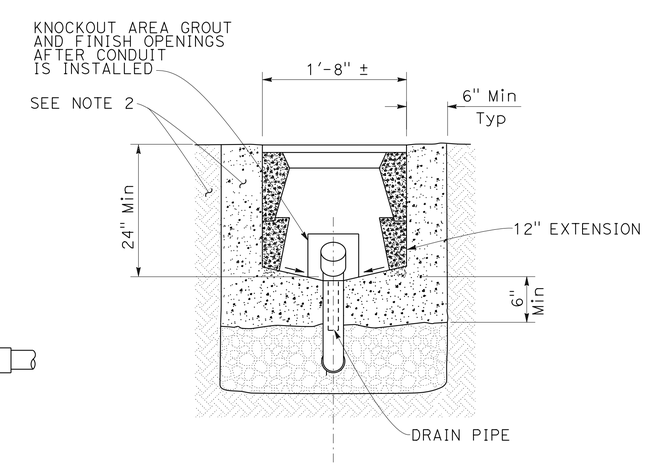

SECTION B-B

(FIBER OPTIC PULL BOX)

ELECTRICAL DETAILS

NO SCALE

E-63

REVISED BY	DY
DATE REVISED	1-6-16
DORIS YANG	KENNETH Y. XU
CALCULATED-DESIGNED BY	CHECKED BY
FUNCTIONAL SUPERVISOR	BEHZAD GOLEMOHAMMADI

STATE OF CALIFORNIA - DEPARTMENT OF TRANSPORTATION
Caltrans
ELECTRICAL

LAST REVISION 09-23-15 | DATE PLOTTED => 15-JUL-2016 | TIME PLOTTED => 11:01

Dist	COUNTY	ROUTE	POST MILES TOTAL PROJECT	SHEET No.	TOTAL SHEETS
04	SM	82, 92	10.4/10.7, R11.0/R11.4	249	370

REGISTERED ELECTRICAL ENGINEER 2-17-16 DATE

6-28-16
PLANS APPROVAL DATE

REGISTERED PROFESSIONAL ENGINEER Kenneth Y. Xu No. 15219 Exp. 6-30-18 ELECTRICAL STATE OF CALIFORNIA

THE STATE OF CALIFORNIA OR ITS OFFICERS OR AGENTS SHALL NOT BE RESPONSIBLE FOR THE ACCURACY OR COMPLETENESS OF SCANNED COPIES OF THIS PLAN SHEET.

NOTES:

1. PORTLAND CEMENT CONCRETE FLOOR OVER CLEAN CRUSHED ROCK SUMP. BOTTOM OF VAULT MUST BE SLOPED TOWARD THE DRAIN PIPE AND MUST HAVE A SMOOTH FINISH.
2. CONCRETE MUST CONTAIN A MINIMUM OF 550 lb OF PORTLAND CEMENT PER CUBIC YARD.
3. VAULT, VAULT EXTENSION, AND VAULT COVER MUST BE QUAZITE OR APPROVED EQUIVALENT, AND MUST SUPPORT MINIMUM TEST LOAD OF 25,000 lb. IF VAULT IS LOCATED IN TRAVEL WAY, VAULT AND COVER MUST CONFORM WITH VERTICAL PROOF LOAD STRENGTH REQUIREMENT UNDER SECTION 86-2.06C.
4. SEE RSP ES-8A FOR VAULT COVER CAPTIVE BOLT AND VAULT THREADED INSERT DETAILS.
5. MARK "CALTRANS TOS COMMUNICATIONS" ON THE TOP FACE OF ALL COVERS.
6. MINIMUM VAULT DEPTH MUST BE 20". IF NECESSARY, AN EXTENSION MAY BE USED TO MEET THE REQUIREMENT.
7. CONDUITS MUST ENTER THROUGH KNOCKOUTS. IF MORE THAN 3 CONDUITS ARE REQUIRED IN SAME KNOCKOUT, KNOCKOUT MUST BE WIDENED TO 3/8" MORE THAN THE CONDUIT COMBINATION.
8. TRUNK LINE CONDUITS FROM THE TYPICAL BORE OR TRENCH SECTION MUST NOT DEFLECT BY MORE THAN 1' PER 10' FROM THE ALIGNMENT PRECEDING OR FOLLOWING VAULT ENTRANCE/EXIT.
9. BOTTOM OF CONDUIT CENTERLINE MUST BE ALIGNED TO THE TOP OF VAULT TO FACILITATE CABLE PULLING. IF EXISTING CONDUIT IS USED, MODIFY CONDUIT TO MATCH SWEEP AS SHOWN. IF NEW CONDUIT IS USED, INSTALL CONDUIT ELBOW AS SHOWN.
10. THE CONDUITS MUST HAVE THREADED BUSHINGS. PVC AND HDPE CONDUITS MUST HAVE BELL ENDS.
11. IF APPLICABLE, VAULT HEIGHT ABOVE EXISTING DIRT GRADE MUST PERMIT 1" OF FUTURE SURFACE LANDSCAPING. WHEN VAULT IS INSTALLED IN EXISTING SIDEWALK, VAULT COVER MUST SIT FLUSH WITH THE PAVEMENT.
12. VAULT MUST BE FURNISHED WITH TWO RACKS AND HOOKS INSTALLED ON EACH OF THE TWO LONG SIDES.
13. SPLICE ENCLOSURES IN FIBER OPTIC VAULT MUST BE USED ONLY WHERE SHOWN. SPLICE ENCLOSURE MUST BE ATTACHED TO THE RACK AND HOOK ASSEMBLY.
14. PROVIDE PERMANENT MARKERS FOR FIBER OPTIC VAULT.

LEGEND:

1. FIBER OPTIC SPLICE ENCLOSURE.
2. FIBER OPTIC VAULT COVER.
3. RACK & HOOK ASSEMBLY, SEE NOTE 12.
4. 45 DEGREE ELBOW, 3' RADIUS MINIMUM. ELBOW AND COUPLING MAY NOT BE NECESSARY FOR NEW CONDUIT INSTALLED BY DIRECTIONAL BORING. NEW CONDUIT INSTALLED BY DIRECTIONAL DRILLING MUST ENTER THE PULL BOX WITH A BENDING RADIUS OF 3' MINIMUM.
5. WARNING TAPE (FOR NEW CONDUIT INSTALLED BY TRENCHING).

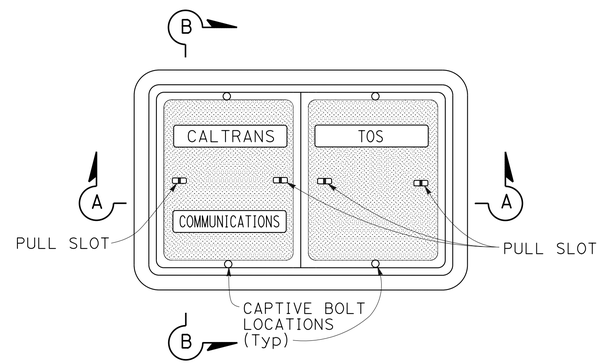

PLAN VIEW

FOR EACH PIECE OF COVER, SEE RSP ES-8A COVER TOP VIEW FOR OTHER DETAILS

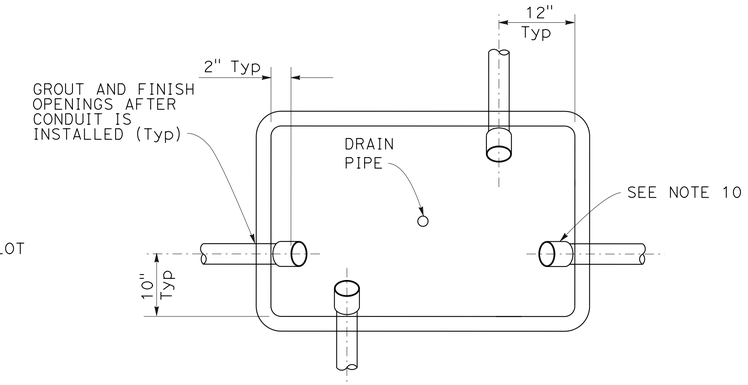

PLAN VIEW WITHOUT COVER

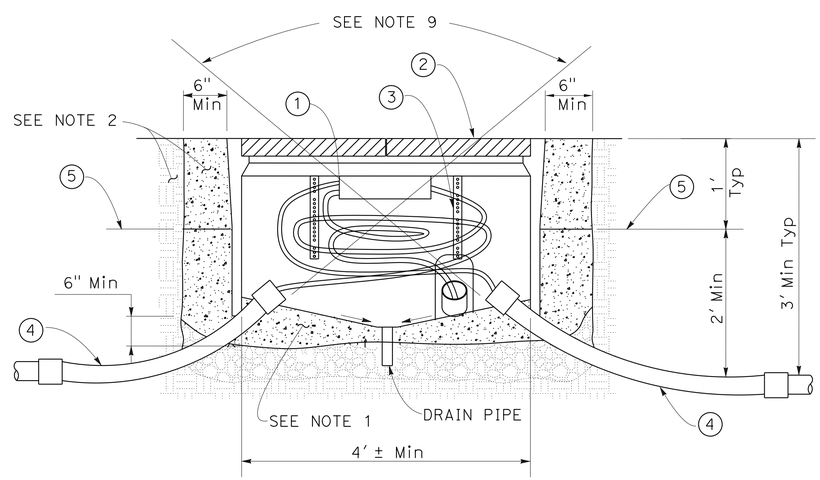

SECTION A-A

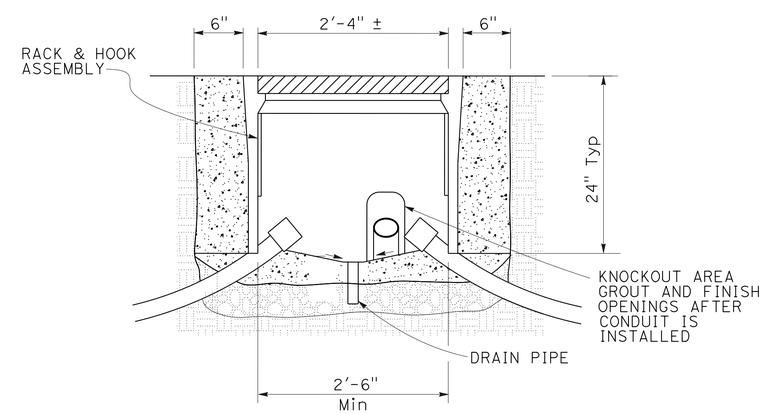

SECTION B-B

(FIBER OPTIC VAULT)

ELECTRICAL DETAILS

NO SCALE

E-64

DY	1-6-16
REVISED BY	DATE REVISED
DORIS YANG	KENNETH Y. XU
CALCULATED-DESIGNED BY	CHECKED BY
FUNCTIONAL SUPERVISOR	BEHZAD GOLEMOHAMMADI

STATE OF CALIFORNIA - DEPARTMENT OF TRANSPORTATION

Caltrans® **ELECTRICAL**

LAST REVISION 09-23-15 | DATE PLOTTED => 15-JUL-2016 | TIME PLOTTED => 11:01

Dist	COUNTY	ROUTE	POST MILES TOTAL PROJECT	SHEET No.	TOTAL SHEETS
04	SM	82, 92	10.4/10.7, R11.0/R11.4	250	370

REGISTERED ELECTRICAL ENGINEER 2-17-16 DATE

6-28-16
PLANS APPROVAL DATE

REGISTERED PROFESSIONAL ENGINEER
Kenneth Y. Xu
No. 15219
Exp. 6-30-18
ELECTRICAL
STATE OF CALIFORNIA

THE STATE OF CALIFORNIA OR ITS OFFICERS OR AGENTS SHALL NOT BE RESPONSIBLE FOR THE ACCURACY OR COMPLETENESS OF SCANNED COPIES OF THIS PLAN SHEET.

CALTRANS STANDARD TYPE K-2 OBJECT MARKER WITH 6" x 12" YELLOW REFLECTIVE BACKGROUND (DIAMOND GRADE SHEETING) AND BLACK LETTERS

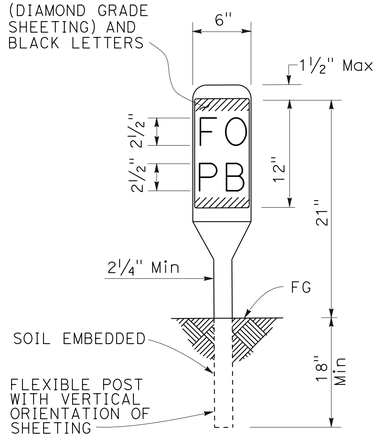

VAULT OR PULL BOX MARKER

CABLE MARKER
PAVED AREAS

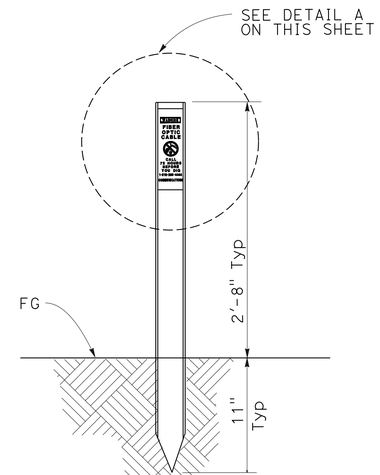

CABLE MARKER
UNPAVED AREAS

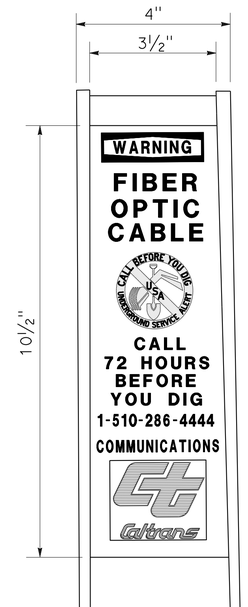

DETAIL A

NOTE: IN UNPAVED AREAS, INSTALL ONE MARKER 1 FOOT AWAY FROM EACH VAULT OR PULL BOX IN WHICH FIBER OPTIC CABLE IS INSTALLED.

PERMANENT FIBER OPTIC MARKER

ELECTRICAL DETAILS

NO SCALE

E-65

CALCULATED-DESIGNED BY	DORIS YANG
CHECKED BY	KENNETH Y. XU
REVISED BY	DY
DATE REVISED	1-6-16
FUNCTIONAL SUPERVISOR	BEHZAD GOLEMOHAMMADI

STATE OF CALIFORNIA - DEPARTMENT OF TRANSPORTATION
Caltrans
ELECTRICAL

LAST REVISION 09-23-15 | DATE PLOTTED => 15-JUL-2016 | TIME PLOTTED => 11:01

Dist	COUNTY	ROUTE	POST MILES TOTAL PROJECT	SHEET No.	TOTAL SHEETS
04	SM	82, 92	10.4/10.7, R11.0/R11.4	251	370

REGISTERED ELECTRICAL ENGINEER 2-17-16 DATE

6-28-16
PLANS APPROVAL DATE

REGISTERED PROFESSIONAL ENGINEER Kenneth Y. Xu No. 15219 Exp. 6-30-18 ELECTRICAL STATE OF CALIFORNIA

THE STATE OF CALIFORNIA OR ITS OFFICERS OR AGENTS SHALL NOT BE RESPONSIBLE FOR THE ACCURACY OR COMPLETENESS OF SCANNED COPIES OF THIS PLAN SHEET.

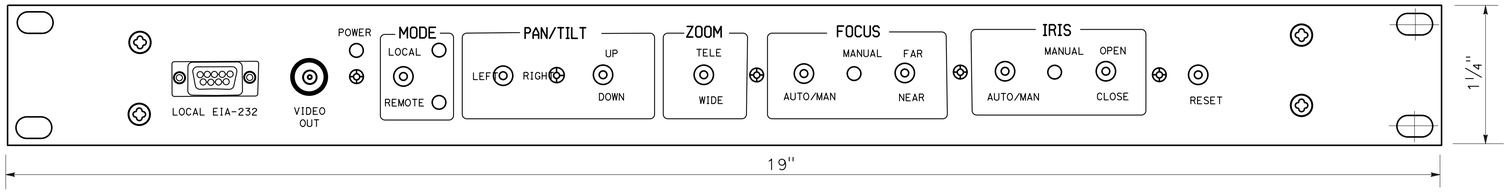

CCU FRONT PANEL LAYOUT

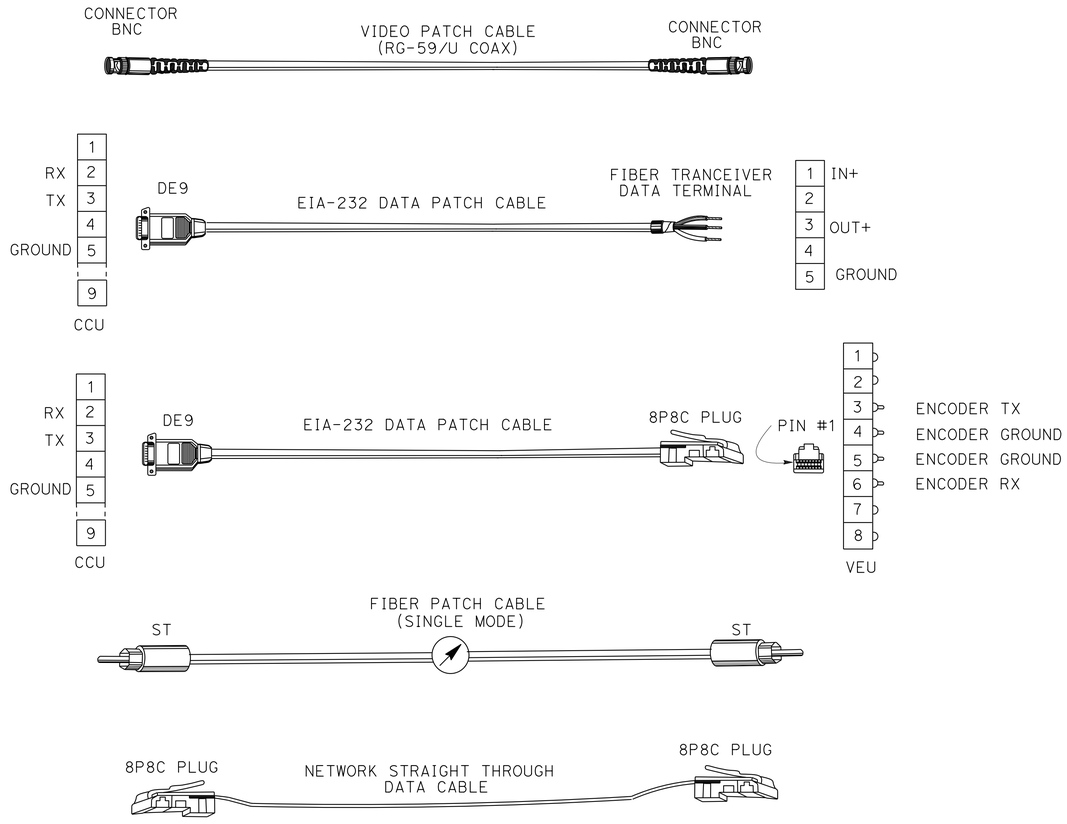

INTERFACE CABLE DETAILS

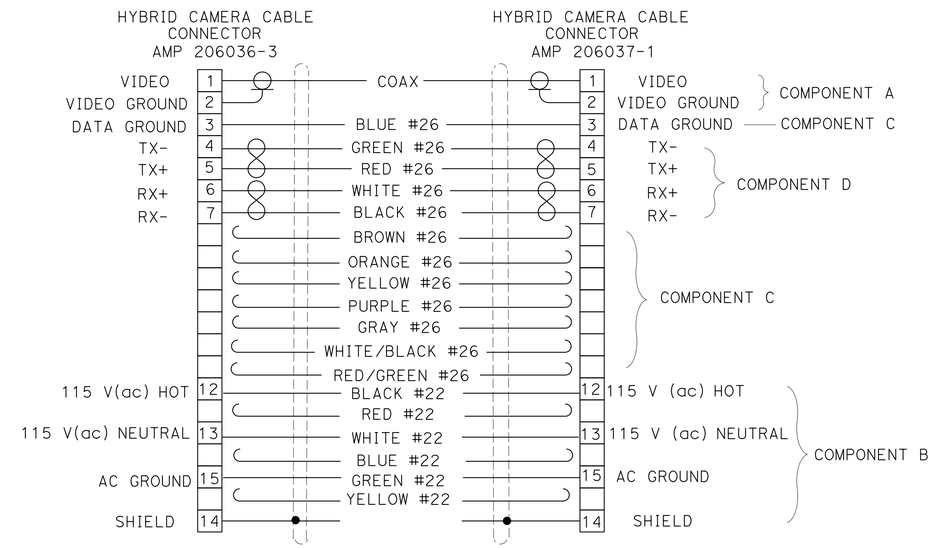

COMPONENT	CONDUCTOR	DESCRIPTION
A	COAX	75 OHM, RG-59/U TYPE, STANDARD ANALOG VIDEO CABLE, 0.242" NOMINAL DIAMETER
B	6 CONDUCTOR	22 AWG, COPPER INSULATED CONDUCTOR, 0.048" NOMINAL DIAMETER, COLOR CODED: B1-BLACK, B2-RED, B3-GREEN, B4-WHITE, B5-BLUE, B6-YELLOW
C	8 CONDUCTOR	26 AWG, COPPER INSULATED CONDUCTOR, 0.037" NOMINAL DIAMETER, COLOR CODED: C1-BROWN, C2-BLUE, C3-ORANGE, C4-YELLOW, C5-PURPLE, C6-GRAY, C7-WHITE/BLACK, C8-RED/GREEN
D	4 CONDUCTOR	26 AWG, COPPER INSULATED CONDUCTOR, 0.037" NOMINAL DIAMETER, COLOR CODED: D1-BLACK & WHITE, D2-RED & GREEN

HYBRID CAMERA CABLE AND CONNECTORS DETAIL

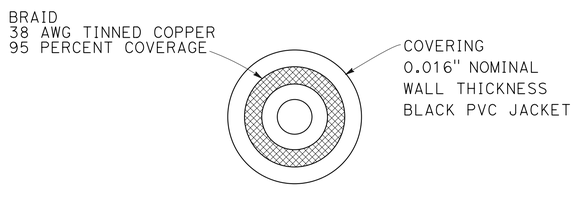

COMPONENT A

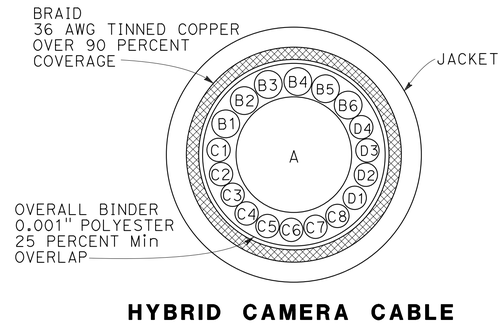

HYBRID CAMERA CABLE CROSS SECTION

(CCTV MOUNTING DETAILS)

ELECTRICAL DETAILS

NO SCALE

E-66

STATE OF CALIFORNIA - DEPARTMENT OF TRANSPORTATION
ELECTRICAL
FUNCTIONAL SUPERVISOR BEHZAD GOLEMOHAMMADI
CALCULATED-DESIGNED BY DORIS YANG
CHECKED BY KENNETH Y. XU
REVISED BY DY
DATE REVISED 1-6-16

LAST REVISION 09-23-15
DATE PLOTTED => 15-JUL-2016
TIME PLOTTED => 11:01

Dist	COUNTY	ROUTE	POST MILES TOTAL PROJECT	SHEET No.	TOTAL SHEETS
04	SM	82, 92	10.4/10.7, R11.0/R11.4	252	370

REGISTERED ELECTRICAL ENGINEER 2-17-16 DATE

6-28-16
PLANS APPROVAL DATE

REGISTERED PROFESSIONAL ENGINEER Kenneth Y. Xu No. 15219 Exp. 6-30-18 ELECTRICAL STATE OF CALIFORNIA

THE STATE OF CALIFORNIA OR ITS OFFICERS OR AGENTS SHALL NOT BE RESPONSIBLE FOR THE ACCURACY OR COMPLETENESS OF SCANNED COPIES OF THIS PLAN SHEET.

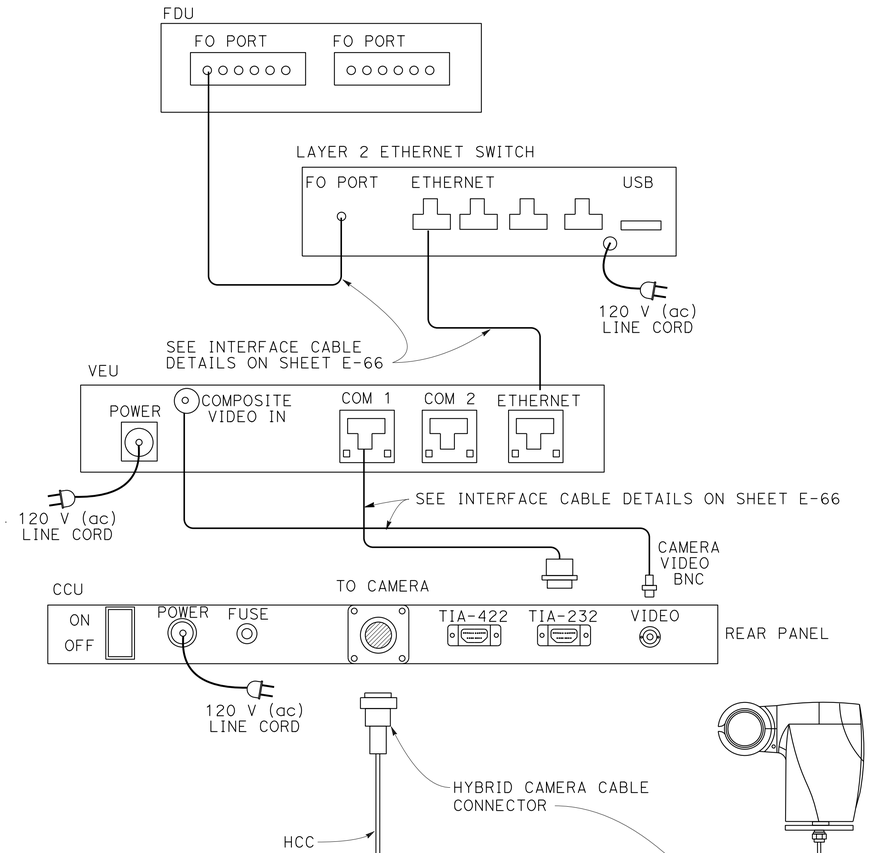

CCTV SYSTEM LAYOUT

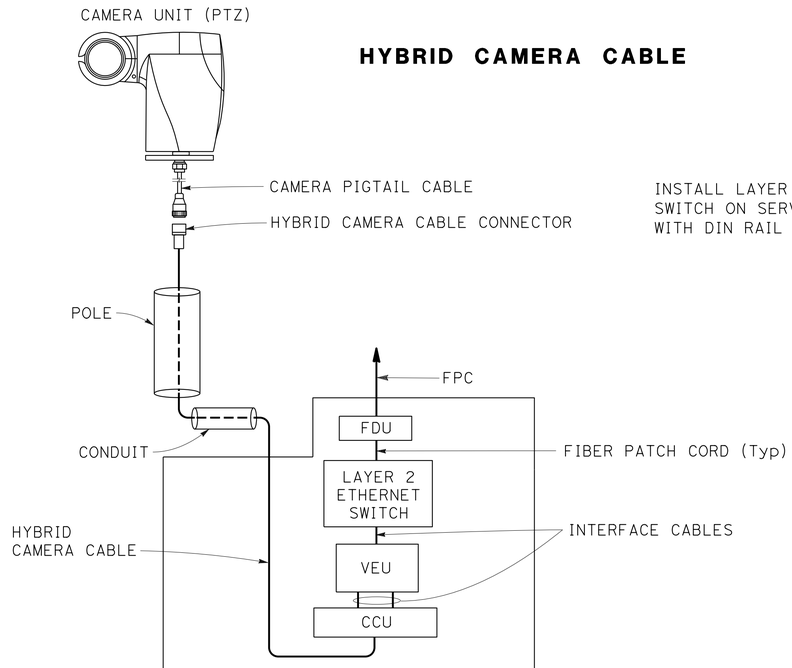

CCTV SYSTEM BLOCK DIAGRAM

HYBRID CAMERA CABLE

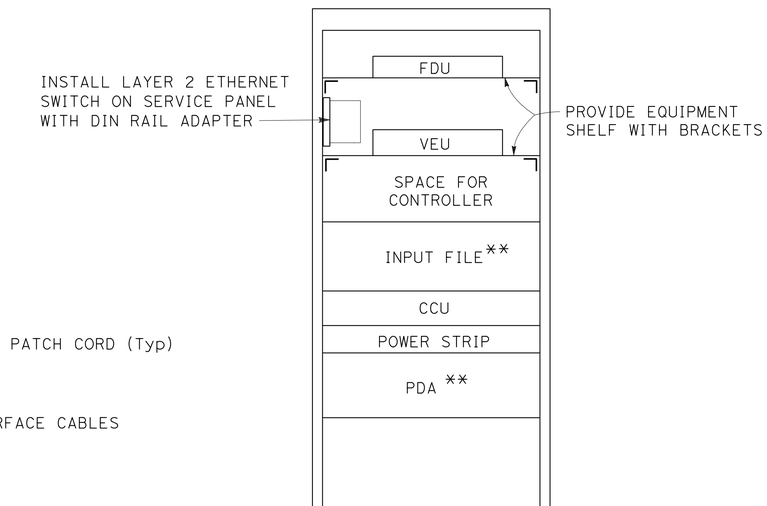

MODEL 334 CONTROLLER CABINET LAYOUT (FRONT VIEW)

** PDA AND INPUT FILE WILL BE INCLUDED ONLY WITH STATE-FURNISHED CONTROLLER CABINET.

ELECTRICAL DETAILS

NO SCALE

E-67

REVISED BY	DATE REVISED
DY	1-6-16

DORIS YANG — KENNETH Y. XU

CALCULATED-DESIGNED BY — CHECKED BY

FUNCTIONAL SUPERVISOR: BEHZAD GOLEMOHAMMADI

STATE OF CALIFORNIA - DEPARTMENT OF TRANSPORTATION

Caltrans

ELECTRICAL

LAST REVISION 09-23-15 | DATE PLOTTED => 15-JUL-2016 | TIME PLOTTED => 11:01

Dist	COUNTY	ROUTE	POST MILES TOTAL PROJECT	SHEET No.	TOTAL SHEETS
04	SM	82, 92	10.4/10.7, R11.0/R11.4	253	370

REGISTERED ELECTRICAL ENGINEER 2-17-16 DATE

6-28-16
PLANS APPROVAL DATE

REGISTERED PROFESSIONAL ENGINEER Kenneth Y. Xu No. 15219 Exp. 6-30-18 ELECTRICAL STATE OF CALIFORNIA

THE STATE OF CALIFORNIA OR ITS OFFICERS OR AGENTS SHALL NOT BE RESPONSIBLE FOR THE ACCURACY OR COMPLETENESS OF SCANNED COPIES OF THIS PLAN SHEET.

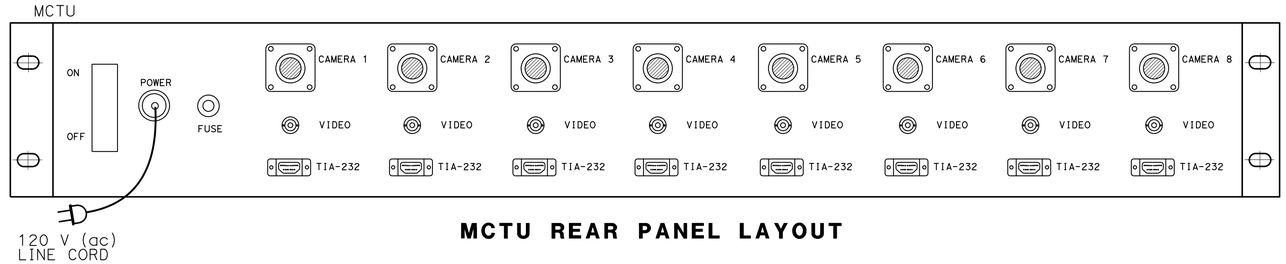

MCTU REAR PANEL LAYOUT

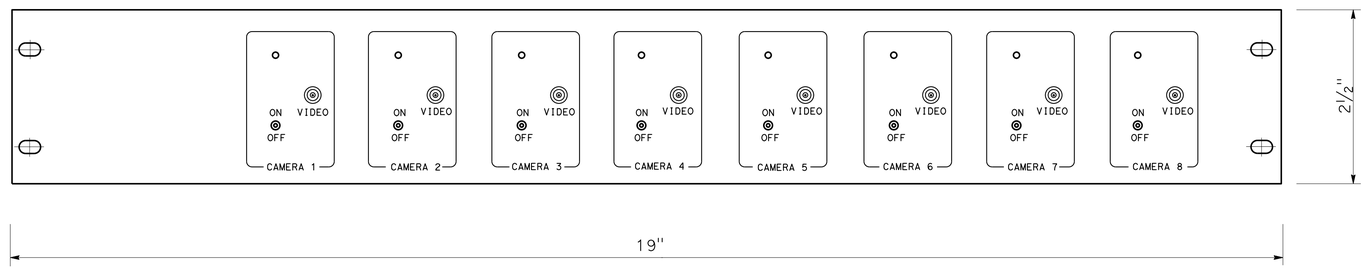

MCTU FRONT PANEL LAYOUT

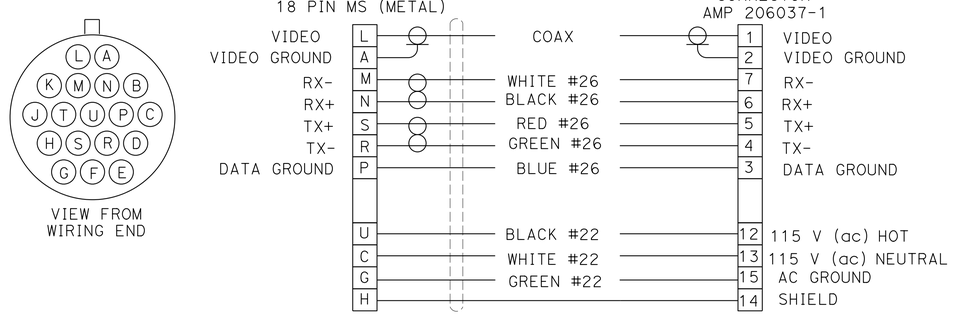

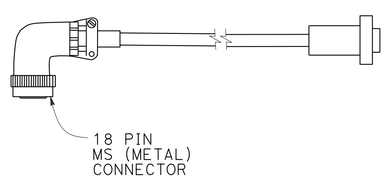

HYBRID CAMERA CABLE

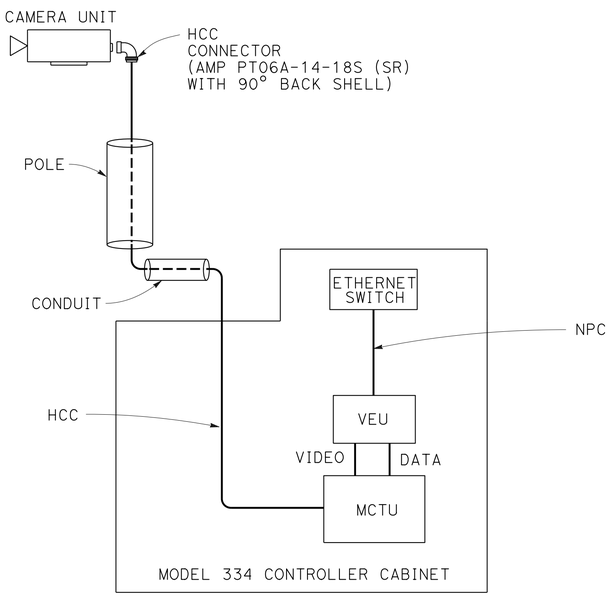

FIXED CCTV SYSTEM BLOCK DIAGRAM

FIXED CCTV CAMERA

ELECTRICAL DETAILS

NO SCALE

E-68

DORIS YANG	DY
KENNETH Y. XU	1-6-16
BEHZAD GOLEMOHAMMADI	

REVISED BY / DATE REVISED
CALCULATED-DESIGNED BY / CHECKED BY
FUNCTIONAL SUPERVISOR

STATE OF CALIFORNIA - DEPARTMENT OF TRANSPORTATION
Caltrans
ELECTRICAL

LAST REVISION 09-23-15 | DATE PLOTTED => 15-JUL-2016 | TIME PLOTTED => 11:01

Dist	COUNTY	ROUTE	POST MILES TOTAL PROJECT	SHEET No.	TOTAL SHEETS
04	SM	82, 92	10.4/10.7, R11.0/R11.4,	254	370

REGISTERED CIVIL ENGINEER 1-14-16 DATE

6-28-16
PLANS APPROVAL DATE

REGISTERED PROFESSIONAL ENGINEER Hossein Khodabakhsh No. 71650 Exp. 12-31-17 CIVIL STATE OF CALIFORNIA

THE STATE OF CALIFORNIA OR ITS OFFICERS OR AGENTS SHALL NOT BE RESPONSIBLE FOR THE ACCURACY OR COMPLETENESS OF SCANNED COPIES OF THIS PLAN SHEET.

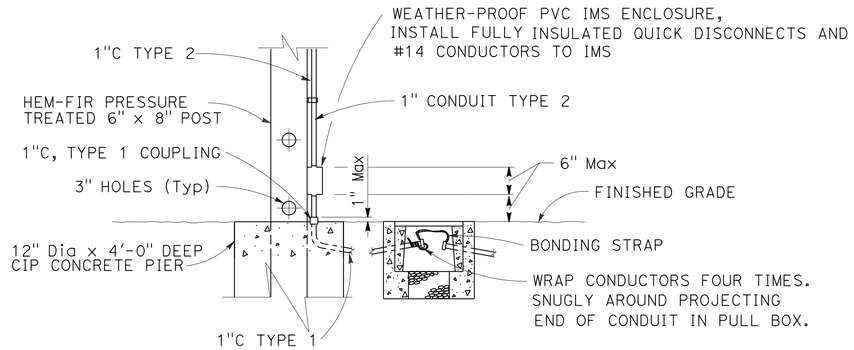

DETAIL A
CONDUIT BREAKAWAY

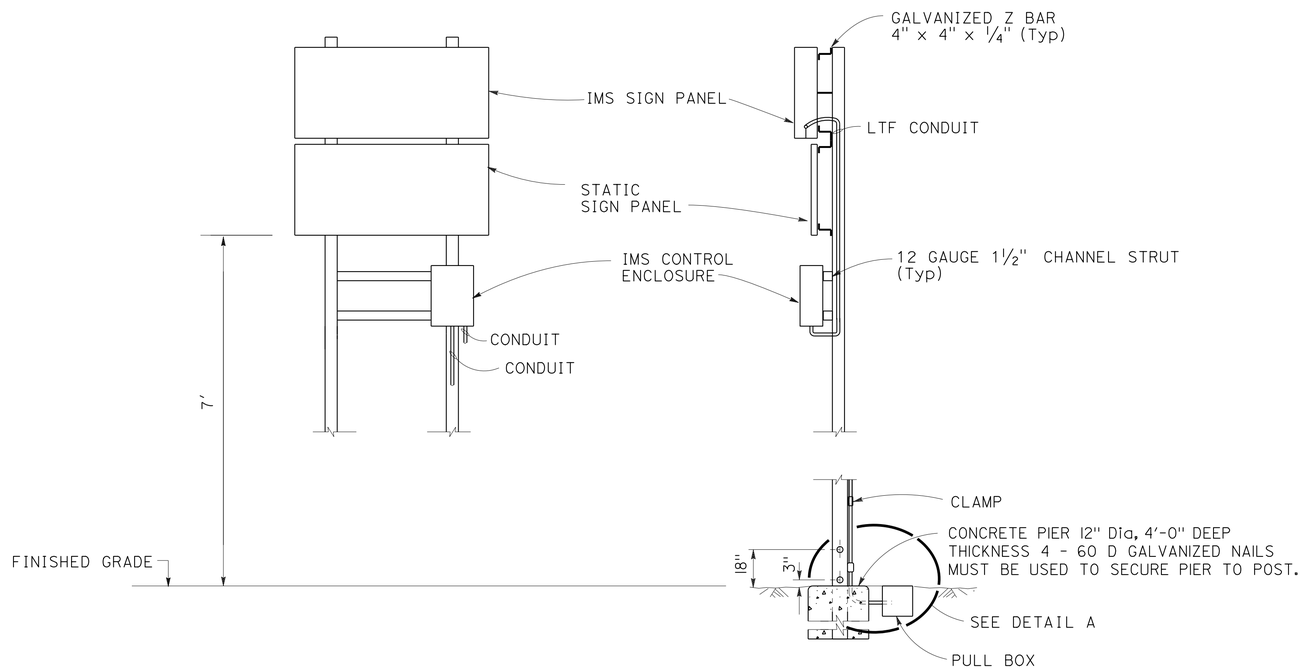

FRONT **SIDE**

IMS ASSEMBLY ON WOOD POST

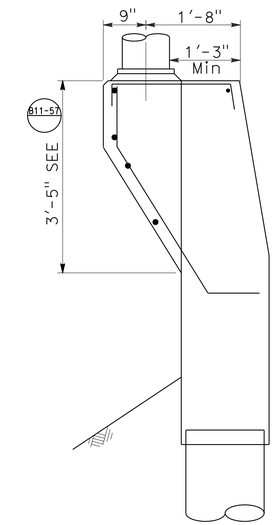

PEDESTAL ELEVATION
TYPE 21 LIGHT STANDARD
ON TYPE 736S/SV BARRIER

ELECTRICAL DETAILS

NO SCALE

E-69

REVISED BY	DATE REVISED
HK	8-26-15

CALCULATED-DESIGNED BY: HOSSEIN KHODABAKHSH
CHECKED BY: ABOLFAZL EMADZADEH
FUNCTIONAL SUPERVISOR: ABOLFAZL EMADZADEH

STATE OF CALIFORNIA - DEPARTMENT OF TRANSPORTATION
Caltrans®
DESIGN

LAST REVISION 03-22-16
DATE PLOTTED => 15-JUL-2016
TIME PLOTTED => 11:01

Dist	COUNTY	ROUTE	POST MILES TOTAL PROJECT	SHEET No.	TOTAL SHEETS
04	SM	82, 92	10.4/10.7, R11.0/R11.4	255	370

REGISTERED ELECTRICAL ENGINEER 2-17-16 DATE

6-28-16
PLANS APPROVAL DATE

REGISTERED PROFESSIONAL ENGINEER Kenneth Y. Xu No. 15219 Exp. 6-30-18 ELECTRICAL STATE OF CALIFORNIA

THE STATE OF CALIFORNIA OR ITS OFFICERS OR AGENTS SHALL NOT BE RESPONSIBLE FOR THE ACCURACY OR COMPLETENESS OF SCANNED COPIES OF THIS PLAN SHEET.

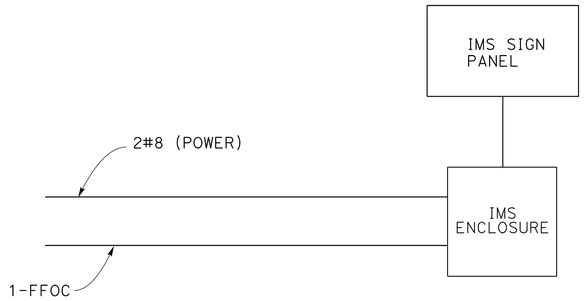

BLOCK DIAGRAM

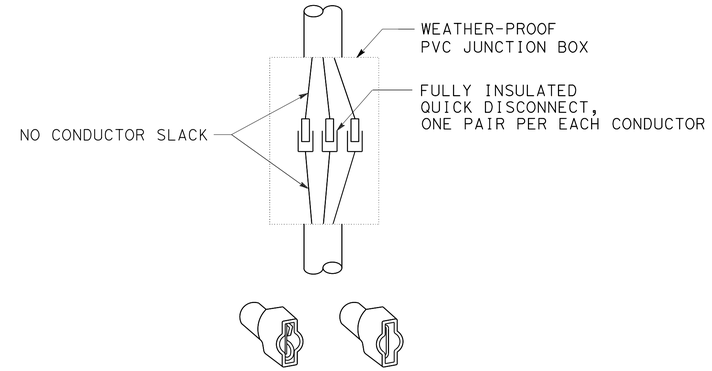

FULLY INSULATED QUICK DISCONNECTS

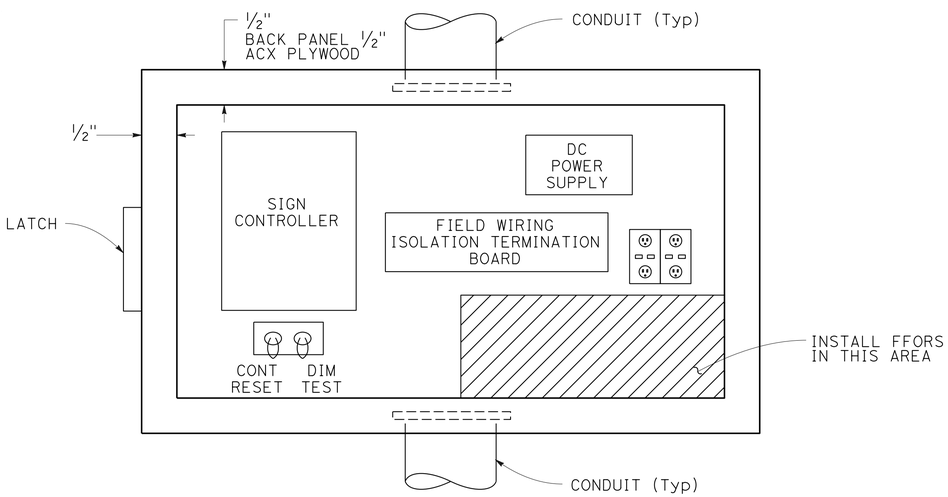

IMS ENCLOSURE LAYOUT

FRONT VIEW
(DOOR REMOVED FOR CLARITY)

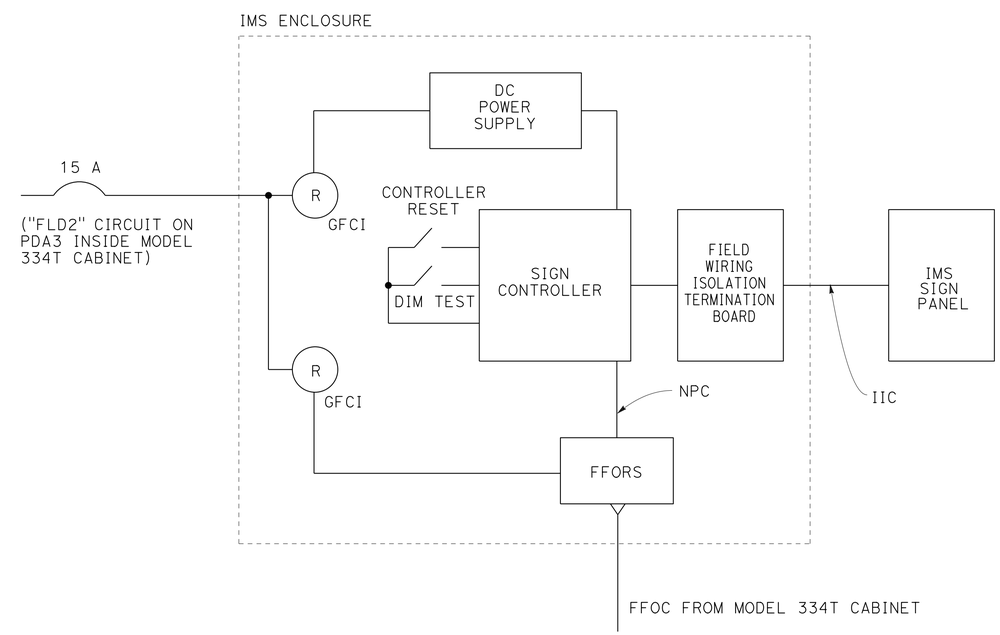

WIRING DIAGRAM

IMS ASSEMBLY DETAIL

ELECTRICAL DETAILS

NO SCALE

E-70

DY	1-6-16
REVISED BY	DATE REVISED
DORIS YANG	KENNETH Y. XU
CALCULATED-DESIGNED BY	CHECKED BY
FUNCTIONAL SUPERVISOR	BEHZAD GOLEMOHAMMADI

STATE OF CALIFORNIA - DEPARTMENT OF TRANSPORTATION
Caltrans
ELECTRICAL

LAST REVISION 03-22-16
DATE PLOTTED => 15-JUL-2016
TIME PLOTTED => 11:02

Dist	COUNTY	ROUTE	POST MILES TOTAL PROJECT	SHEET No.	TOTAL SHEETS
04	SM	82, 92	10.4/10.7, R11.0/R11.4	256	370

REGISTERED ELECTRICAL ENGINEER 2-17-16 DATE

6-28-16
PLANS APPROVAL DATE

REGISTERED PROFESSIONAL ENGINEER Kenneth Y. Xu No. 15219 Exp. 6-30-18 ELECTRICAL STATE OF CALIFORNIA

THE STATE OF CALIFORNIA OR ITS OFFICERS OR AGENTS SHALL NOT BE RESPONSIBLE FOR THE ACCURACY OR COMPLETENESS OF SCANNED COPIES OF THIS PLAN SHEET.

NOTE:

ITEMS SHOWN IN THESE TABLES ARE NOT A SEPARATE PAY ITEM, FOR INFORMATION ONLY.

SIGNAL AND LIGHTING

SHEET No.	CONDUIT			PULL BOX			CONDUCTOR					LOOP		DLC	STANDARD				LUMINAIRE	SIGNAL MOUNT		
	2"	3"	4"	#5	#6	#9	#6	#8	#10	#14	SIC	TYPE A	TYPE D	TYPE B	15	15TS	1-B	29A-5-100	165 W LED	SV-1-T	SV-2-TA	TV-1-T
	ft			EA			ft					EA		ft	EA							
E-2																						
E-3																						
E-4	110	100		2								3		100								
E-5	650	1700	200	6	18		2000	1800	1600	9500	650	33	12	7000	1	1	4	3	5	6	1	2
E-6		400		1		2		1000						300								
E-8	500	1700	150	10	12		800	1800	1800	9000	650	37	12		1	1	2	2	5	4	2	1
E-9		400		2		3		1000	1000		500	4										
E-10	60	300										3		100								

SIGNAL AND LIGHTING (CONTINUATION)

SHEET No.	SIGNAL MAST ARM	SIGNAL HEAD 3-12"	APS	LED COUNT DOWN PED SIGNAL	PED SIGNAL MOUNT SP-1-T	BATTERY BACKUP SYSTEM	FIXED CCTV	HCC	IMS SIGN	FPC (12)	FFOC (6)	TYPE 334 CABINET	FDU	TYPE III-AF SERVICE CABINET	BLANK-OUT SIGN	FIBER OPTIC PULL BOX	FIBER OPTIC VAULT	EMERGENCY VEHICLE UNIT
	EA							ft	EA	ft		EA						
E-2																		
E-3																		
E-4																		
E-5	3	14	4	4	4	1	3	650		1200	100	1	1	1	2	1	1	2
E-6									1		450							
E-8	3	14	4	4	4	1	3	650		1300	100	1	1	2	2	2	1	2
E-9									1		450							
E-10										400								

LIGHTING

SHEET No.	CONDUIT			PULL BOX				CONDUCTOR		STANDARD			LUMINAIRE		TYPE III-AF SERVICE CABINET	REMOVE LIGHTING STANDARD	REMOVE LIGHTING FIXTURE	REMOVE PULL BOX
	1½"	2"	3"	#5	#5 TW	#6	#9	#6	#14	30	21	1-B	75 W SOFFIT	235 W LED				
	ft			EA				ft		EA								
E-12																3	5	4
E-13																9	13	12
E-14																9	13	11
E-15																1	13	1
E-16		1100			5		2	4000		3	1			6				
E-17		950			2		2	3000		2	1		2	5				
E-18	20	550	450	1	2	4	1	6000	60	2			2	4				
E-19		500		1	2		2	600	60	2		1		14	1			

ELECTRICAL QUANTITIES

E-71

REVISED BY	DATE REVISED
DY	1-6-16

DORIS YANG — KENNETH Y. XU — CALCULATED-DESIGNED BY — CHECKED BY

FUNCTIONAL SUPERVISOR: BEHZAD GOLEMOHAMMADI

STATE OF CALIFORNIA - DEPARTMENT OF TRANSPORTATION — Caltrans — ELECTRICAL

LAST REVISION 03-22-16 | DATE PLOTTED => 15-JUL-2016 | TIME PLOTTED => 11:02

Dist	COUNTY	ROUTE	POST MILES TOTAL PROJECT	SHEET No.	TOTAL SHEETS
04	SM	82, 92	10.4/10.7, R11.0/R11.4	257	370

REGISTERED ELECTRICAL ENGINEER 2-17-16 DATE

6-28-16
PLANS APPROVAL DATE

REGISTERED PROFESSIONAL ENGINEER Kenneth Y. Xu No. 15219 Exp. 6-30-18 ELECTRICAL STATE OF CALIFORNIA

THE STATE OF CALIFORNIA OR ITS OFFICERS OR AGENTS SHALL NOT BE RESPONSIBLE FOR THE ACCURACY OR COMPLETENESS OF SCANNED COPIES OF THIS PLAN SHEET.

NOTE:
ITEMS SHOWN IN THESE TABLES ARE NOT A SEPARATE PAY ITEM, FOR INFORMATION ONLY.

RAMP METERING SYSTEM

SHEET No.	CONDUIT				PULL BOX				CONDUCTOR			LOOP		DLC	STANDARD FOUNDATION		GPRS	REMOVE PULL BOX
	2"	2½"	3"	4"	#5	#6	#9	#6	#8	#10	#14	TYPE A	TYPE D	TYPE B	1-B	19-4-100		
	ft				EA				ft			EA		ft	EA			
E-20																		2
E-21																		4
E-22																		7
E-23																		2
E-24	400	50	150		5		3		160		2000	11	2	2000				
E-25	1600	150	1150	200	11	4	5	3000	300	2100	2000	22	4	4500	2	1	2	
E-26	2000		600		12	3	2	2200	300	3000	2000	13	2	4500	1		2	
E-27	450				3		3					5		700				

LIGHTING (STAGE CONSTRUCTION)

SHEET No.	CONDUCTOR	DLC	TEMPORARY WOOD POLE	TEMPORARY WOOD POLE WITH MASTARM	LUMINAIRE 235 W LED
	#6	TYPE B			
	ft		EA		
E-28 TO E-31	1200	3500	8		
E-32 TO E-35	2500		3	4	4
E-36 TO E-39	100		1		
E-40 TO E-43	1400			3	3

LIGHTING (CITY STREET)

SHEET No.	CONDUIT	CITY PULL BOX	CONDUCTOR	LUMINAIRE	LUMINAIRE (WALL MOUNTED)	PEU	CITY LIGHTING STANDARD	#8 PULL BOX	TYPE 1-B STANDARD
	1½"		#6	150 W	75 W				
	ft	EA	ft	EA					
E-53 TO E-54	1700	25	8000	19	8	1	19	4	1

SIGNAL AND LIGHTING (STAGE CONSTRUCTION)

SHEET No.	CONDUIT	PULL BOX	CONDUCTOR			LOOP		DLC	TEMPORARY WOOD POLE	LUMINAIRE	SIGNAL MOUNT		SIGNAL MAST ARM	SIGNAL HEAD	APS	LED COUNT DOWN PED SIGNAL	PED SIGNAL MOUNT
	2½"	#5	#6	#8	#14	TYPE A	TYPE D	TYPE B		165 W LED	SV-1-T	SV-2-TA		3-12"			SP-1-T
	ft	EA	ft			EA		ft	EA								
E-48 TO E-49	150	4	800	1800	2700	28	7	7000	4	3	2	2	3	12	2	2	2

ELECTRICAL QUANTITIES

E-72

REVISED BY	DATE REVISED
DY	1-6-16

DORIS YANG — CALCULATED-DESIGNED BY
KENNETH Y. XU — CHECKED BY
BEHZAD GOLEMOHAMMADI — FUNCTIONAL SUPERVISOR

STATE OF CALIFORNIA - DEPARTMENT OF TRANSPORTATION
ELECTRICAL
Caltrans

LAST REVISION 09-23-15
DATE PLOTTED => 15-JUL-2016
TIME PLOTTED => 11:02

DIST	COUNTY	ROUTE	POST MILES TOTAL PROJECT	SHEET No	TOTAL SHEETS
04	SM	82, 92	10.4/10.7, R11.0/R11.4	258	370

Devang K. Vora 8-26-15
REGISTERED CIVIL ENGINEER DATE

6-28-16
PLANS APPROVAL DATE

REGISTERED PROFESSIONAL ENGINEER DEVANG VORA No. C76546 Exp. 12/31/16 CIVIL STATE OF CALIFORNIA

The State of California or its officers or agents shall not be responsible for the accuracy or completeness of electronic copies of this plan sheet.

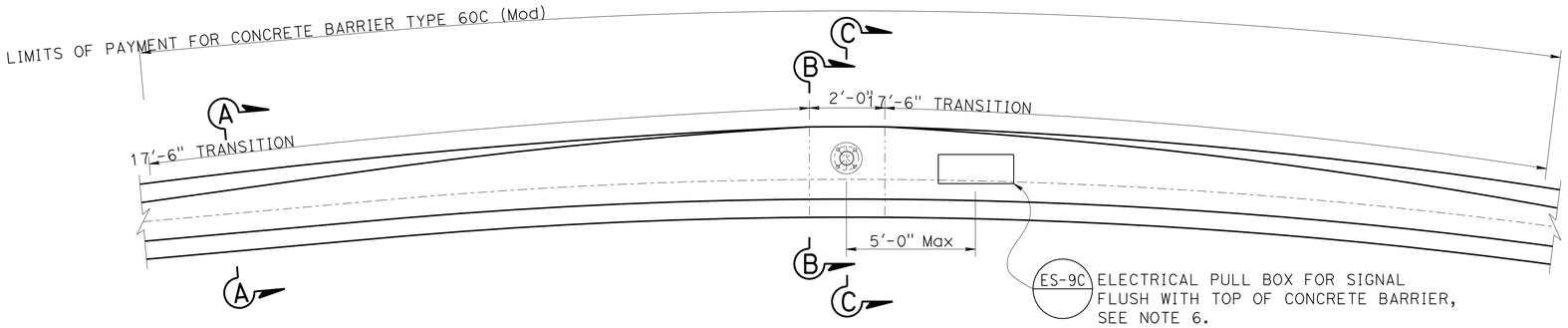

PART PLAN VIEW

NOTE: BOTH SIDES SIMILAR

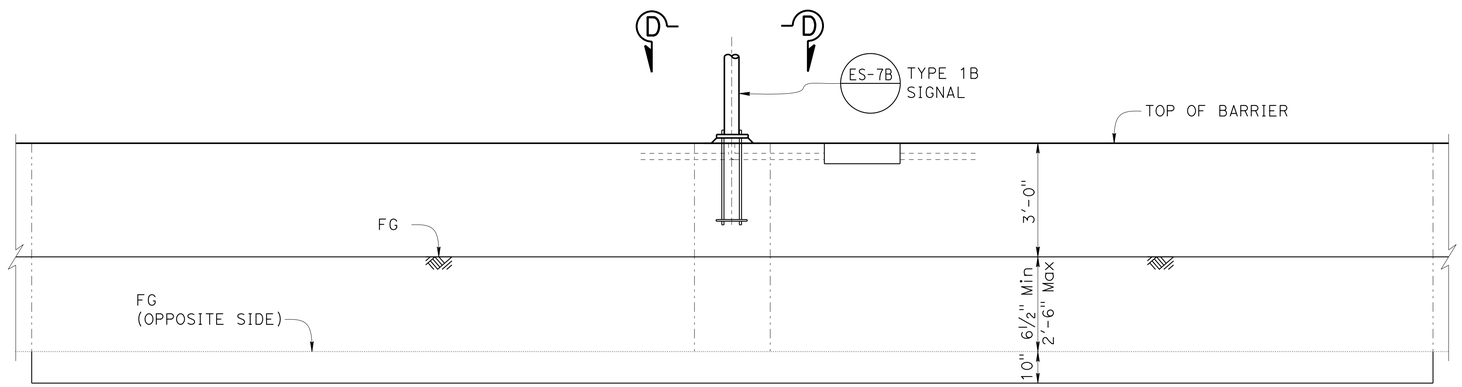

PART ELEVATION

NOTE: BOTH SIDES SIMILAR

GENERAL NOTES:

SPECIFICATIONS

Design: AASHTO Standard Specifications for Structural Supports for Highway Signs, Luminaires and Traffic Signals, Sixth Edition.

LOADING

Wind Loadings: 100 MPH (3 Second gust)

UNIT STRESSES

Structural Steel: fy = 55,000 psi tapered steel tube
fy = 50,000 psi unless otherwise noted

Anchor Bolts: fy = 55 ksi

Reinforced Concrete: f'c = 3,600 psi
fy = 60,000 psi

NOTES:

1. For "SECTION A-A", "SECTION B-B", "SECTION C-C" and "SECTION D-D", see SES-2.
2. For pole locations, see "ROADWAY PLANS".
3. All steel must be galvanized after fabrication.
4. During pole erection the post shall be raked as necessary with the use of leveling nuts to provide a plumb pole axis.
5. For details not show, see "STANDARD PLANS 2010" and "REVISED STANDARD PLANS 2010".
6. For details not shown see "ROADWAY PLANS".

NOTE:
THE CONTRACTOR MUST VERIFY ALL CONTROLLING FIELD DIMENSIONS BEFORE ORDERING OR FABRICATING ANY MATERIAL.

STANDARD PLAN SHEET No.
DETAIL No.

NO SCALE

TYPE 1-B SIGNAL STANDARD - "CLVR2" Sta 12+50

TYPE 60C BARRIER (MODIFIED)

BARRIER TRANSITION

SES-1

BRANCH CHIEF *JEFF WOODY*

	BY	CHECKED
DESIGN	A.GUTIERREZ	D.VORA
DETAILS	M.CLEVERLEY	A.GUTIERREZ
QUANTITIES		

STATE OF CALIFORNIA
DEPARTMENT OF TRANSPORTATION

DIVISION OF ENGINEERING SERVICES
DESIGN AND TECHNICAL SERVICES
SPECIAL DESIGNS BRANCH A

BRIDGE NO. N/A
POST MILE

(ENGLISH) SPECIAL DESIGNS BRANCH BORDER SHEET (REV. 4-1-14)

ORIGINAL SCALE IN INCHES FOR REDUCED PLANS 0 1 2 3

UNIT: 3619
PROJECT NUMBER & PHASE: 0412000496-1 CONTRACT NO.: 04-235524

DISREGARD PRINTS BEARING EARLIER REVISION DATES

REVISION DATES

SHEET 1 OF 4

FILE => /2015sd/04-235521/04-235521_ses-1

USERNAME => s130819 DATE PLOTTED => 15-JUL-2016 TIME PLOTTED => 11:02

DIST	COUNTY	ROUTE	POST MILES TOTAL PROJECT	SHEET No	TOTAL SHEETS
04	SM	82, 92	10.4/10.7, R11.0/R11.4	259	370

Devang K. Vora 8-26-15
REGISTERED CIVIL ENGINEER DATE

6-28-16
PLANS APPROVAL DATE

REGISTERED PROFESSIONAL ENGINEER DEVANG VORA No. C76546 Exp. 12/31/16 CIVIL STATE OF CALIFORNIA

The State of California or its officers or agents shall not be responsible for the accuracy or completeness of electronic copies of this plan sheet.

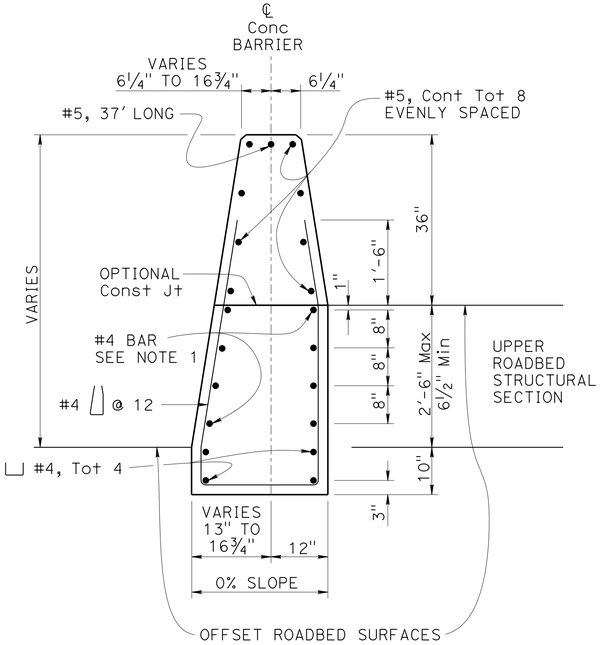

SECTION A-A

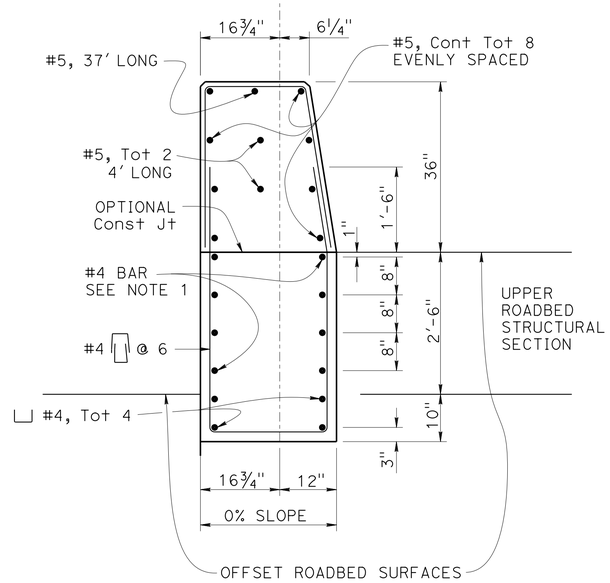

SECTION B-B

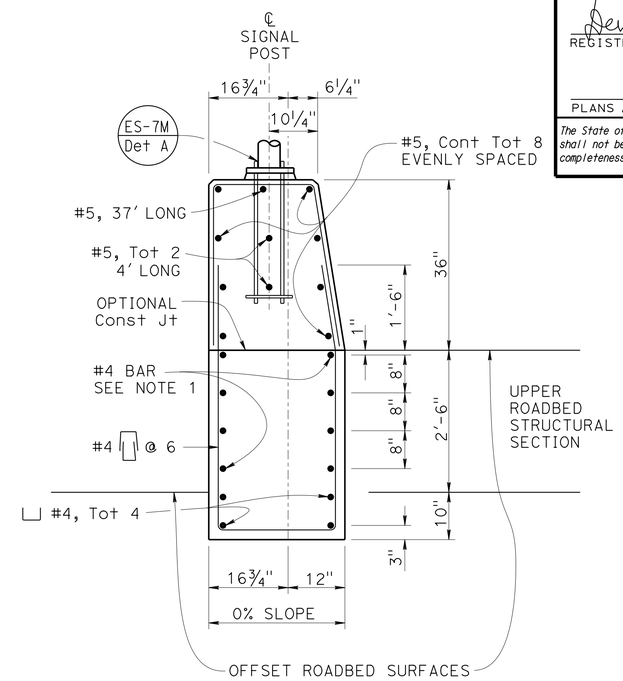

SECTION C-C

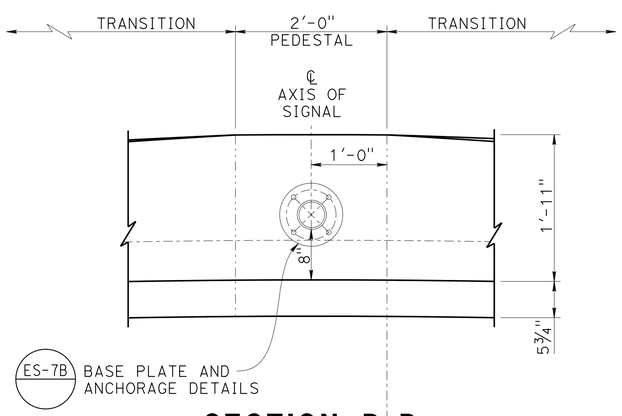

SECTION D-D

NOTE:

1. For roadbed surfaces offset greater than 1½" and less than or equal to 3", no rebars required. For roadbed surfaces offset greater than 3" and less than or equal to 8", use two #4 rebars at 3" above the lower roadbed surface. For roadbed surfaces offset greater than 8" and less than or equal to 12", use two #4 rebars at 3" above the lower roadbed surface and two #4 rebars at 8" above the lower roadbed surface. For roadbed surfaces offset greater than 12" and less than or equal to 36", use two #4 rebars at 3" above the lower roadbed surface and two #4 rebars at every 8" increment vertical spacing above the first two #4 rebars.

NOTE:
THE CONTRACTOR MUST VERIFY ALL CONTROLLING FIELD DIMENSIONS BEFORE ORDERING OR FABRICATING ANY MATERIAL.

STANDARD PLAN SHEET No.
DETAIL No.

NO SCALE

BRANCH CHIEF	*JEFF WOODY*	DESIGN	BY *A.GUTIERREZ* CHECKED *D.VORA*
		DETAILS	BY *M.CLEVERLEY* CHECKED *A.GUTIERREZ*
		QUANTITIES	BY *X* CHECKED *X*

STATE OF **CALIFORNIA** DEPARTMENT OF TRANSPORTATION

DIVISION OF ENGINEERING SERVICES DESIGN AND TECHNICAL SERVICES
SPECIAL DESIGNS BRANCH **A**

BRIDGE NO. N/A
POST MILE

TYPE 60C BARRIER (MODIFIED) - "CLVR2" Sta 12+50
BARRIER TRANSITION DETAILS

SES-2

(ENGLISH) SPECIAL DESIGNS BRANCH BORDER SHEET (REV. 4-1-14)

ORIGINAL SCALE IN INCHES FOR REDUCED PLANS 0 1 2 3

UNIT: 3619
PROJECT NUMBER & PHASE: 0412000496-1 CONTRACT NO.: 04-235524

DISREGARD PRINTS BEARING EARLIER REVISION DATES

REVISION DATES

SHEET 2 OF 4

FILE => /2015sd/04-235521/04-235521_ses-2.dgn

USERNAME => s130813 DATE PLOTTED => 15-JUL-2016 TIME PLOTTED => 11:02

DIST	COUNTY	ROUTE	POST MILES TOTAL PROJECT	SHEET No	TOTAL SHEETS
04	SM	82, 92	10.4/10.7, R11.0/R11.4	260	370

Devang K. Vora 8-26-15
REGISTERED CIVIL ENGINEER DATE

6-28-16
PLANS APPROVAL DATE

REGISTERED PROFESSIONAL ENGINEER DEVANG VORA No. C76546 Exp. 12/31/16 CIVIL STATE OF CALIFORNIA

The State of California or its officers or agents shall not be responsible for the accuracy or completeness of electronic copies of this plan sheet.

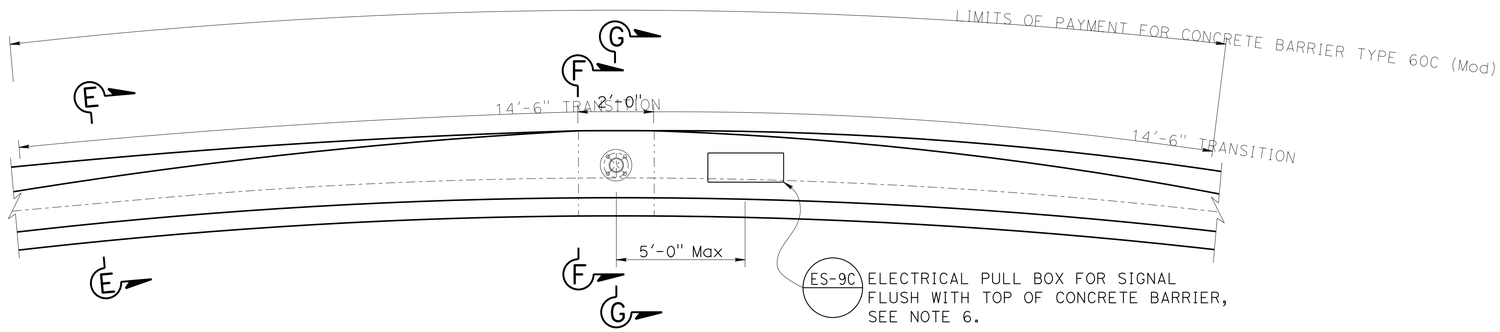

PART PLAN VIEW

NOTE: BOTH SIDES SIMILAR

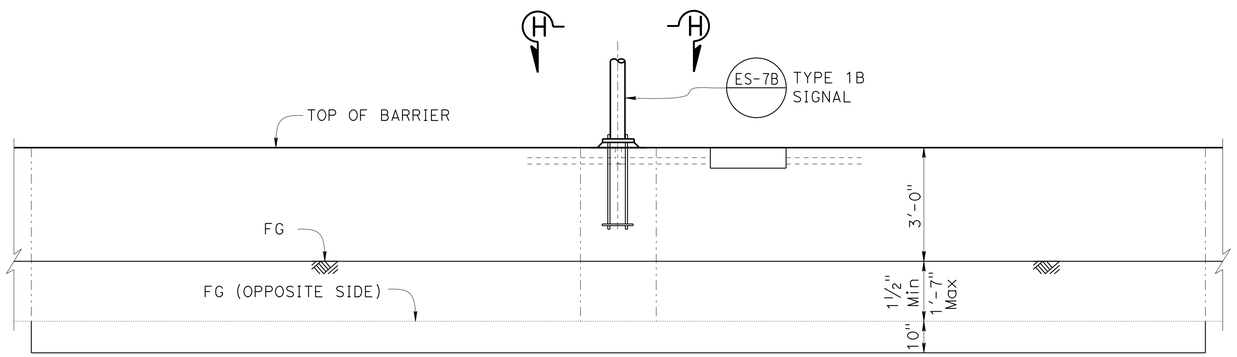

PART ELEVATION

NOTE: BOTH SIDES SIMILAR

GENERAL NOTES:

SPECIFICATIONS

Design: AASHTO Standard Specifications for Structural Supports for Highway Signs, Luminaires and Traffic Signals, Sixth Edition.

LOADING

Wind Loadings: 100 MPH (3 Second gust)

UNIT STRESSES

Structural Steel: fy = 55,000 psi tapered steel tube
fy = 50,000 psi unless otherwise noted

Anchor Bolts: fy = 55 ksi

Reinforced Concrete: f'c = 3,600 psi
fy = 60,000 psi

NOTES:

1. For "SECTION E-E", "SECTION F-F", "SECTION G-G" and "SECTION H-H", see SES-4.
2. For pole locations, see "ROADWAY PLANS".
3. All steel must be galvanized after fabrication.
4. During pole erection the post shall be raked as necessary with the use of leveling nuts to provide a plumb pole axis.
5. For details not show, see "STANDARD PLANS 2010" and "REVISED STANDARD PLANS 2010".
6. For details not shown see "ROADWAY PLANS".

STANDARD PLAN SHEET No.
DETAIL No.

NOTE:
THE CONTRACTOR MUST VERIFY ALL CONTROLLING FIELD DIMENSIONS BEFORE ORDERING OR FABRICATING ANY MATERIAL.

NO SCALE

TYPE 1-B SIGNAL STANDARD - "CLVR3" Sta 12+41

TYPE 60C BARRIER (MODIFIED)

BARRIER TRANSITION

SES-3

BRANCH CHIEF *JEFF WOODY*

	BY	CHECKED
DESIGN	A.GUTIERREZ	D.VORA
DETAILS	M.CLEVERLEY	A.GUTIERREZ
QUANTITIES		

STATE OF CALIFORNIA
DEPARTMENT OF TRANSPORTATION

DIVISION OF ENGINEERING SERVICES
DESIGN AND TECHNICAL SERVICES
SPECIAL DESIGNS BRANCH A

BRIDGE NO. N/A
POST MILE

(ENGLISH) SPECIAL DESIGNS BRANCH BORDER SHEET (REV. 4-1-14)

ORIGINAL SCALE IN INCHES FOR REDUCED PLANS 0 1 2 3

UNIT: 3619
PROJECT NUMBER & PHASE: 0412000496-1
CONTRACT NO.: 04-235524

DISREGARD PRINTS BEARING EARLIER REVISION DATES

REVISION DATES

SHEET 3 OF 4

FILE => /2015sd/04-235521/04-235521_ses-3

USERNAME => s130819 DATE PLOTTED => 15-JUL-2016 TIME PLOTTED => 11:02

DIST	COUNTY	ROUTE	POST MILES TOTAL PROJECT	SHEET No	TOTAL SHEETS
04	SM	82, 92	10.4/10.7, R11.0/R11.4	261	370

Devang K. Vora 8-26-15
REGISTERED CIVIL ENGINEER DATE

6-28-16
PLANS APPROVAL DATE

The State of California or its officers or agents shall not be responsible for the accuracy or completeness of electronic copies of this plan sheet.

REGISTERED PROFESSIONAL ENGINEER DEVANG VORA No. C76546 Exp. 12/31/16 CIVIL STATE OF CALIFORNIA

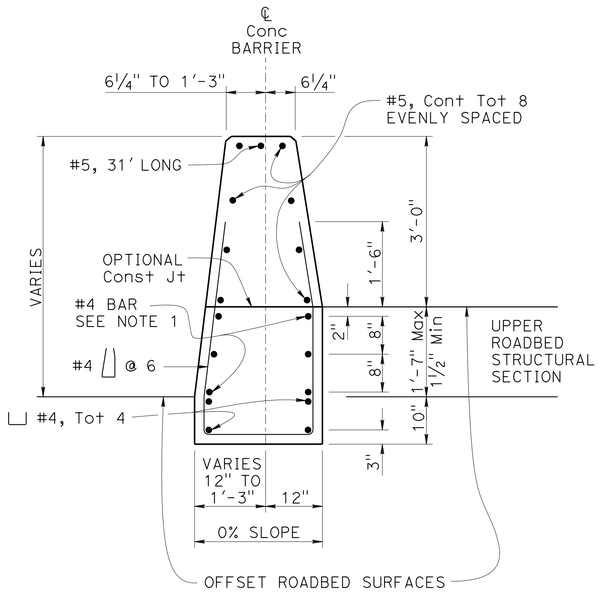

SECTION E-E

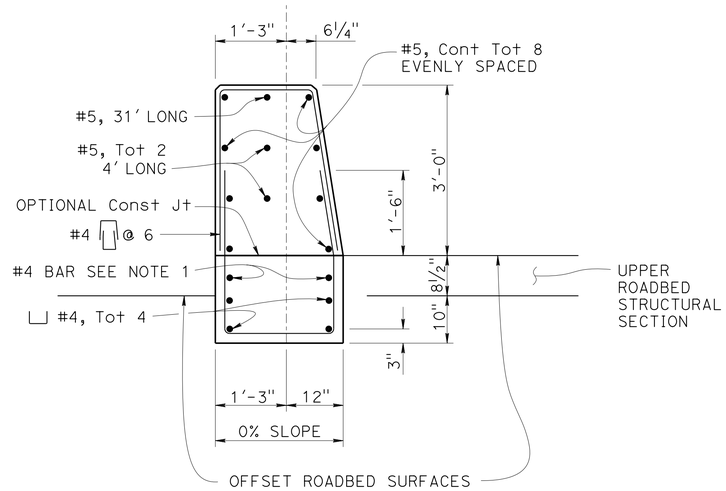

SECTION F-F

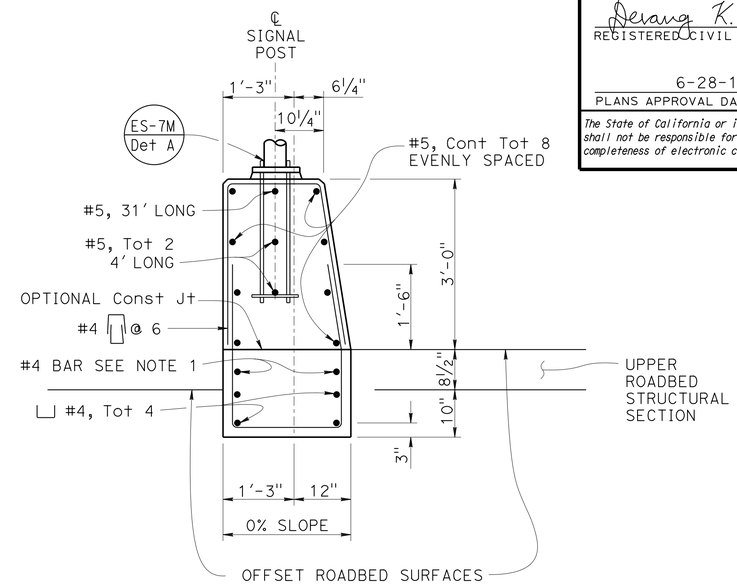

SECTION G-G

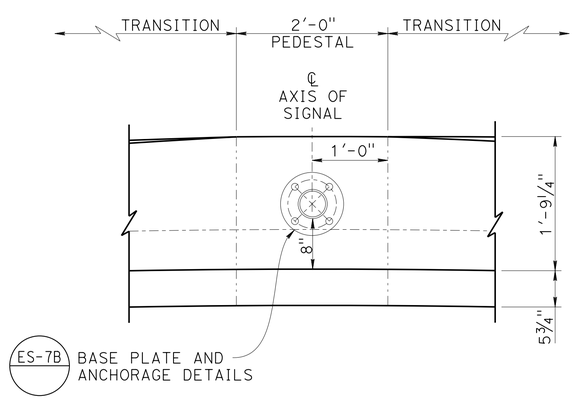

SECTION H-H

NOTE:

1. For roadbed surfaces offset greater than 1½" and less than or equal to 3", no rebars required. For roadbed surfaces offset greater than 3" and less than or equal to 8", use two #4 rebars at 3" above the lower roadbed surface. For roadbed surfaces offset greater than 8" and less than or equal to 12", use two #4 rebars at 3" above the lower roadbed surface and two #4 rebars at 8" above the lower roadbed surface. For roadbed surfaces offset greater than 12" and less than or equal to 36", use two #4 rebars at 3" above the lower roadbed surface and two #4 rebars at every 8" increment vertical spacing above the first two #4 rebars.

NOTE:
THE CONTRACTOR MUST VERIFY ALL CONTROLLING FIELD DIMENSIONS BEFORE ORDERING OR FABRICATING ANY MATERIAL.

STANDARD PLAN SHEET No.
DETAIL No.

NO SCALE

BRANCH CHIEF *JEFF WOODY*

	BY	CHECKED
DESIGN	A.GUTIERREZ	D.VORA
DETAILS	M.CLEVERLEY	A.GUTIERREZ
QUANTITIES	X	X

STATE OF CALIFORNIA
DEPARTMENT OF TRANSPORTATION

DIVISION OF ENGINEERING SERVICES
DESIGN AND TECHNICAL SERVICES
SPECIAL DESIGNS BRANCH
A

BRIDGE NO. N/A
POST MILE

TYPE 60C BARRIER (MODIFIED) - "CLVR3" Sta 12+41
BARRIER TRANSITION DETAILS

SES-4

(ENGLISH) SPECIAL DESIGNS BRANCH BORDER SHEET (REV. 4-1-14)

ORIGINAL SCALE IN INCHES FOR REDUCED PLANS 0 1 2 3

UNIT: 3619
PROJECT NUMBER & PHASE: 0412000496-1 CONTRACT NO.: 04-235524

DISREGARD PRINTS BEARING EARLIER REVISION DATES

REVISION DATES

SHEET 4 OF 4

FILE => /2015sd/04-235521/04-235521_ses4.dgn

USERNAME => s130819 DATE PLOTTED => 15-JUL-2016 TIME PLOTTED => 11:02

M

Maint	MAINTENANCE
Max	MAXIMUM
MB	METAL BEAM
MBB	METAL BEAM BARRIER
MBGR	METAL BEAM GUARD RAILING
Med	MEDIAN
MGS	MIDWEST GUARDRAIL SYSTEM
MH	MANHOLE
Min	MINIMUM
Misc	MISCELLANEOUS
Misc I & S	MISCELLANEOUS IRON AND STEEL
Mkr	MARKER
Mod	MODIFIED,
	MODIFY
Mon	MONUMENT
MP	METAL PLATE
MPGR	METAL PLATE GUARD RAILING
MR	MOVEMENT RATING
MSE	MECHANICALLY STABILIZED EMBANKMENT
Mt	MOUNTAIN, MOUNT
Mtl	MATERIAL
MVP	MAINTENANCE VEHICLE PULLOUT

N

N	NORTH
NB	NORTHBOUND
No.	NUMBER (MUST HAVE PERIOD)
Nos.	NUMBERS (MUST HAVE PERIOD)
NPS	NOMINAL PIPE SIZE
NS	NEAR SIDE
NSP	NEW STANDARD PLAN
NTS	NOT TO SCALE

O

Oblr	OBLITERATE
OC	OVERCROSSING
OD	OUTSIDE DIAMETER
OF	OUTSIDE FACE
OG	ORIGINAL GROUND
OGAC	OPEN GRADED ASPHALT CONCRETE
OGFC	OPEN GRADED FRICTION COURSE
OH	OVERHEAD
OHWM	ORDINARY HIGH WATER MARK
O-O	OUT TO OUT
Opp	OPPOSITE
OSD	OVERSIDE DRAIN

P

P	PAGE
PAP	PERFORATED ALUMINUM PIPE
PB	PULL BOX
PC	POINT OF CURVATURE,
	PRECAST
PCC	POINT OF COMPOUND CURVE,
	PORTLAND CEMENT CONCRETE
PCMS	PORTABLE CHANGEABLE MESSAGE SIGN
PCP	PERFORATED CONCRETE PIPE,
	PRESTRESSED CONCRETE PIPE
PCVC	POINT OF COMPOUND VERTICAL CURVE
PEC	PERMIT TO ENTER AND CONSTRUCT
Ped	PEDESTRIAN
Ped OC	PEDESTRIAN OVERCROSSING
Ped UC	PEDESTRIAN UNDERCROSSING
Perm Mtl	PERMEABLE MATERIAL

P continued

PG	PROFILE GRADE
PI	POINT OF INTERSECTION
PJP	PARTIAL JOINT PENETRATION
Pkwy	PARKWAY
ℙ,PL	PLATE
P/L	PROPERTY LINE
PM	POST MILE,
	TIME FROM NOON TO MIDNIGHT
PN	PAVING NOTCH
POC	POINT OF HORIZONTAL CURVE
POT	POINT OF TANGENT
POVC	POINT OF VERTICAL CURVE
PP	PIPE PILE,
	PLASTIC PIPE,
	POWER POLE
PPL	PREFORMED PERMEABLE LINER
PPP	PERFORATED PLASTIC PIPE
PRC	POINT OF REVERSE CURVE
PRF	PAVEMENT REINFORCING FABRIC
PRVC	POINT OF REVERSE VERTICAL CURVE
PS&E	PLANS, SPECIFICATIONS AND ESTIMATES
PS, P/S	PRESTRESSED
PSP	PERFORATED STEEL PIPE
PT	POINT OF TANGENCY
PVC	POLYVINYL CHLORIDE
Pvmt	PAVEMENT

Q

Qty	QUANTITY

R

R	RADIUS
R & D	REMOVE AND DISPOSE
R & S	REMOVE AND SALVAGE
R/C	RATE OF CHANGE
RCA	REINFORCED CONCRETE ARCH
RCB	REINFORCED CONCRETE BOX
RCP	REINFORCED CONCRETE PIPE
RCPA	REINFORCED CONCRETE PIPE ARCH
Rd	ROAD
Reinf	REINFORCED,
	REINFORCEMENT,
	REINFORCING
Rel	RELOCATE
Repl	REPLACEMENT
Ret	RETAINING
Rev	REVISED, REVISION
Rdwy	ROADWAY
RHMA	RUBBERIZED HOT MIX ASPHALT
Riv	RIVER
RM	ROAD-MIXED
RP	RADIUS POINT,
	REFERENCE POINT
RR	RAILROAD
RSP	ROCK SLOPE PROTECTION,
	REVISED STANDARD PLAN
Rt	RIGHT
Rte	ROUTE
RW	REDWOOD,
	RETAINING WALL
R/W	RIGHT OF WAY
Rwy	RAILWAY

S

S	SOUTH,
	SUPPLEMENT
SAE	STRUCTURE APPROACH EMBANKMENT
Salv	SALVAGE
SAPP	STRUCTURAL ALUMINUM PLATE PIPE
SB	SOUTHBOUND
SC	SAND CUSHION
SCSP	SLOTTED CORRUGATED STEEL PIPE
SD	STORM DRAIN
Sec	SECOND,
	SECTION
Sep	SEPARATION
SG	SUBGRADE
Shld	SHOULDER
Sht	SHEET
Sim	SIMILAR
℄	STATION LINE
SM	SELECTED MATERIAL
Spec	SPECIAL,
	SPECIFICATIONS
SPP	SLOTTED PLASTIC PIPE
SS	SLOPE STAKE
SSBM	STRAP AND SADDLE BRACKET METHOD
SSD	STRUCTURAL SECTION DRAIN
SSPA	STRUCTURAL STEEL PLATE ARCH
SSPP	STRUCTURAL STEEL PLATE PIPE
SSPPA	STRUCTURAL STEEL PLATE PIPE ARCH
SSRP	STEEL SPIRAL RIB PIPE
St	STREET
Sta	STATION
STBB	SINGLE THRIE BEAM BARRIER
Std	STANDARD
Str	STRUCTURE
Surf	SURFACING
SW	SIDEWALK,
	SOUND WALL
Swr	SEWER
Sym	SYMMETRICAL
S4S	SURFACE 4 SIDES

T

T	SEMI-TANGENT
Tan	TANGENT
TBB	THRIE BEAM BARRIER
Tbr	TIMBER
TC	TOP OF CURB
TCB	TRAFFIC CONTROL BOX
TCE	TEMPORARY CONSTRUCTION EASEMENT
Tel	TELEPHONE
Temp	TEMPORARY
TG	TOP OF GRADE
Tot	TOTAL
TP	TELEPHONE POLE
TPB	TREATED PERMEABLE BASE
TPM	TREATED PERMEABLE MATERIAL
Trans	TRANSITION

T continued

TS	TRANSVERSE,
	TRAFFIC SIGNAL,
	TUBULAR STEEL
Typ	TYPICAL

U

UC	UNDERCROSSING
UD	UNDERDRAIN
UG	UNDERGROUND
UON	UNLESS OTHERWISE NOTED
UP	UNDERPASS

V

V	VALVE,
	DESIGN SPEED
Var	VARIABLE,
	VARIES
VC	VERTICAL CURVE
VCP	VITRIFIED CLAY PIPE
Vert	VERTICAL
Via	VIADUCT
Vol	VOLUME

W

W	WEST,
	WIDTH
WB	WESTBOUND
WH	WEEP HOLE
WM	WIRE MESH
WS	WATER SURFACE
WSP	WELDED STEEL PIPE
Wt	WEIGHT
WV	WATER VALVE
WW	WINGWALL
WWLOL	WINGWALL LAYOUT LINE

X

X Sec	CROSS SECTION
Xing	CROSSING

Y

Yr	YEAR
Yrs	YEARS

Dist	COUNTY	ROUTE	POST MILES TOTAL PROJECT	SHEET No.	TOTAL SHEETS
04	SM	82, 92	10.4/10.7, R11.0/R11.4	262	370

Grace M. Tsushima
REGISTERED CIVIL ENGINEER

July 19, 2013
PLANS APPROVAL DATE

REGISTERED PROFESSIONAL ENGINEER
Grace M. Tsushima
No. C49814
Exp. 9-30-14
CIVIL
STATE OF CALIFORNIA

THE STATE OF CALIFORNIA OR ITS OFFICERS OR AGENTS SHALL NOT BE RESPONSIBLE FOR THE ACCURACY OR COMPLETENESS OF SCANNED COPIES OF THIS PLAN SHEET.

TO ACCOMPANY PLANS DATED 6-28-16

UNIT OF MEASUREMENT SYMBOLS:

Some of the symbols used in the project plan quantity tables and in the Bid Item List are:

TABLE A

SYMBOL USED	DEFINITIONS
ACRE	ACRE
CF	CUBIC FOOT
CY	CUBIC YARD
EA	EACH
GAL	GALLON
LB	POUND
LF	LINEAR FOOT
SQFT	SQUARE FOOT
SQYD	SQUARE YARD
STA	100 FEET
TAB	TABLET
TON	2,000 POUNDS

Some of the symbols used in the plans other than in the project plan quantity tables are:

TABLE B

SYMBOL USED	DEFINITIONS
ksi	KIPS PER SQUARE INCH
ksf	KIPS PER SQUARE FOOT
psi	POUNDS PER SQUARE INCH
psf	POUNDS PER SQUARE FOOT
lb/ft^3, pcf	POUNDS PER CUBIC FOOT
tsf	TONS PER SQUARE FOOT
mph, MPH *	MILES PER HOUR
ø	NOMINAL DIAMETER
oz	OUNCE
lb	POUND
kip	1,000 POUNDS
cal	CALORIE
ft	FOOT OR FEET
gal	GALLON

* For use on a sign panel only

STATE OF CALIFORNIA
DEPARTMENT OF TRANSPORTATION

ABBREVIATIONS (SHEET 2 OF 2)

NO SCALE

RSP A10B DATED JULY 19, 2013 SUPERSEDES STANDARD PLAN A10B DATED MAY 20, 2011 - PAGE 2 OF THE STANDARD PLANS BOOK DATED 2010.

REVISED STANDARD PLAN RSP A10B

2010 REVISED STANDARD PLAN RSP A10B

6-7-13

Dist	COUNTY	ROUTE	POST MILES TOTAL PROJECT	SHEET No.	TOTAL SHEETS
04	SM	82, 92	10.4/10.7, R11.0/R11.4	263	370

REGISTERED CIVIL ENGINEER

July 19, 2013
PLANS APPROVAL DATE

REGISTERED PROFESSIONAL ENGINEER Roberta L. McLaughlin No. C40375 Exp. 3-31-15 CIVIL STATE OF CALIFORNIA

THE STATE OF CALIFORNIA OR ITS OFFICERS OR AGENTS SHALL NOT BE RESPONSIBLE FOR THE ACCURACY OR COMPLETENESS OF SCANNED COPIES OF THIS PLAN SHEET.

TO ACCOMPANY PLANS DATED 6-28-16

EXIT RAMP NEUTRAL AREA (GORE) TREATMENT

DETAIL 36

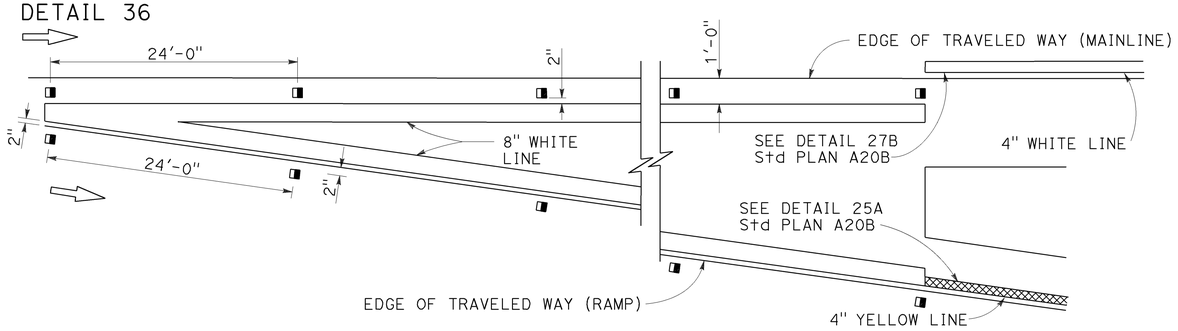

ENTRANCE RAMP NEUTRAL AREA (MERGE) TREATMENT

DETAIL 36A

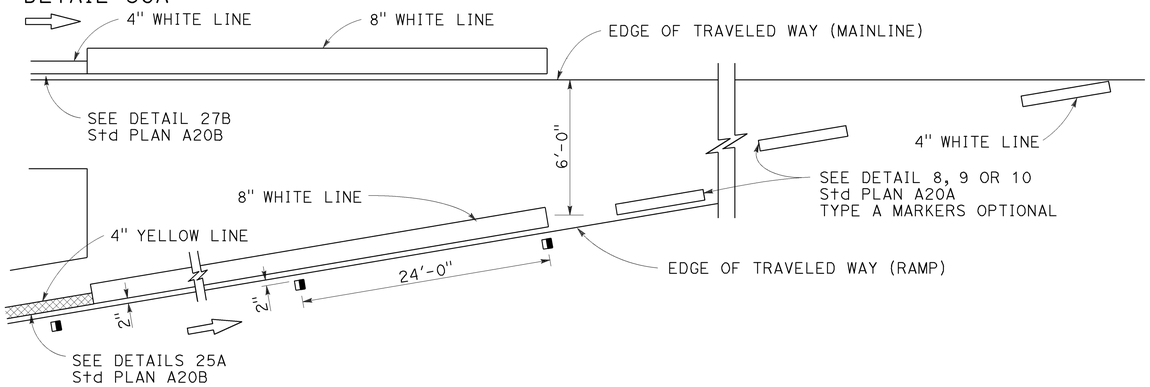

ENTRANCE RAMP NEUTRAL AREA (ACCELERATION LANE) TREATMENT

DETAIL 36B

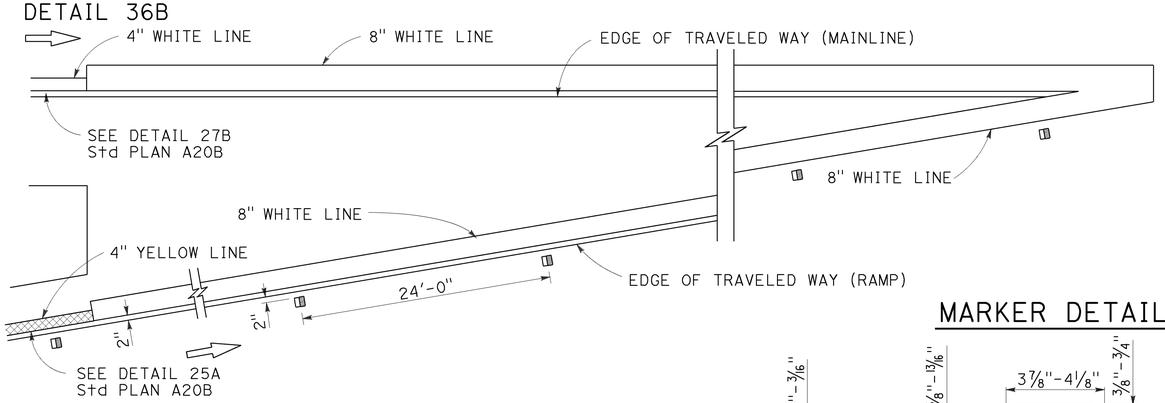

LANE DROP AT EXIT RAMPS

DETAIL 37

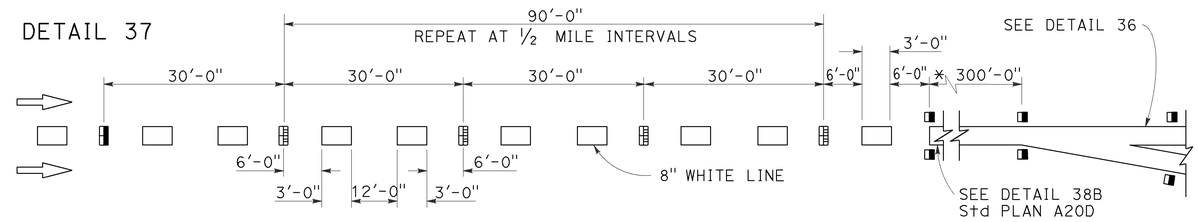

DETAIL 37A

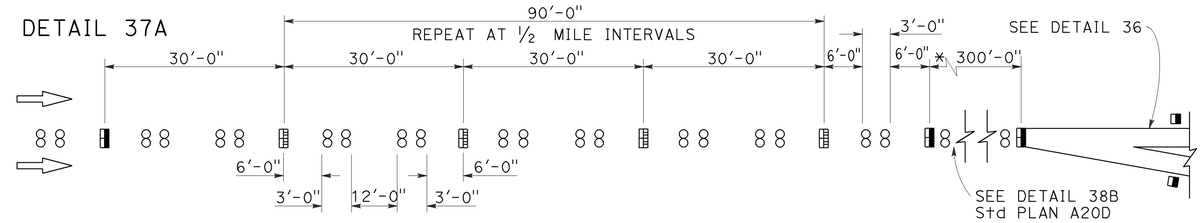

* The solid channelizing line shown may be omitted on short auxiliary lanes where weaving length is critical.

LANE DROP AT INTERSECTIONS

DETAIL 37B

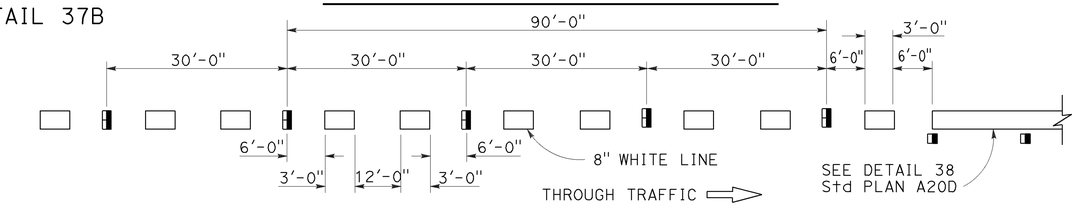

DETAIL 37C

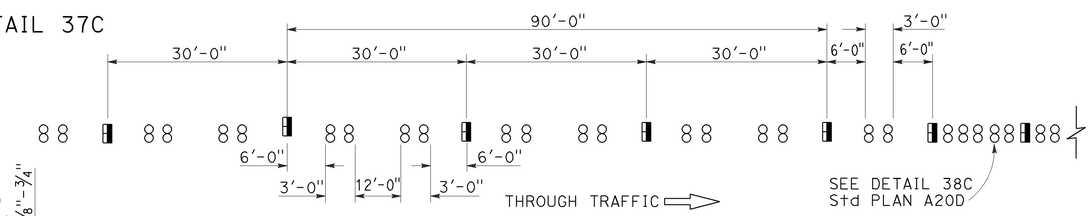

MARKER DETAILS

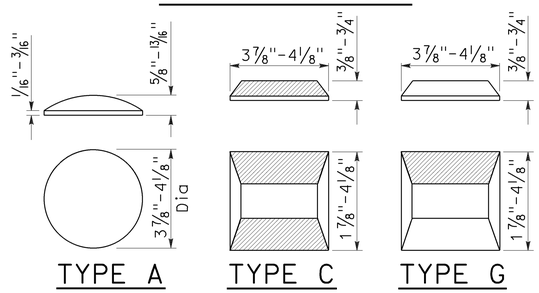

LEGEND:

MARKERS

- ○ TYPE A WHITE NON-REFLECTIVE
- ⊞ TYPE C RED-CLEAR RETROREFLECTIVE
- ◨ TYPE G ONE-WAY CLEAR RETROREFLECTIVE

STATE OF CALIFORNIA
DEPARTMENT OF TRANSPORTATION

PAVEMENT MARKERS AND TRAFFIC LINE TYPICAL DETAILS

NO SCALE

RSP A20C DATED JULY 19, 2013 SUPERSEDES STANDARD PLAN A20C DATED MAY 20, 2011 - PAGE 11 OF THE STANDARD PLANS BOOK DATED 2010.

REVISED STANDARD PLAN RSP A20C

2010 REVISED STANDARD PLAN RSP A20C

4-29-13

Dist	COUNTY	ROUTE	POST MILES TOTAL PROJECT	SHEET No.	TOTAL SHEETS
04	SM	82, 92	10.4/10.7, R11.0/R11.4	264	370

REGISTERED CIVIL ENGINEER

April 20, 2012
PLANS APPROVAL DATE

REGISTERED PROFESSIONAL ENGINEER
Roberta L. McLaughlin
No. C40375
Exp. 3-31-13
CIVIL
STATE OF CALIFORNIA

THE STATE OF CALIFORNIA OR ITS OFFICERS OR AGENTS SHALL NOT BE RESPONSIBLE FOR THE ACCURACY OR COMPLETENESS OF SCANNED COPIES OF THIS PLAN SHEET.

TO ACCOMPANY PLANS DATED 6-28-16

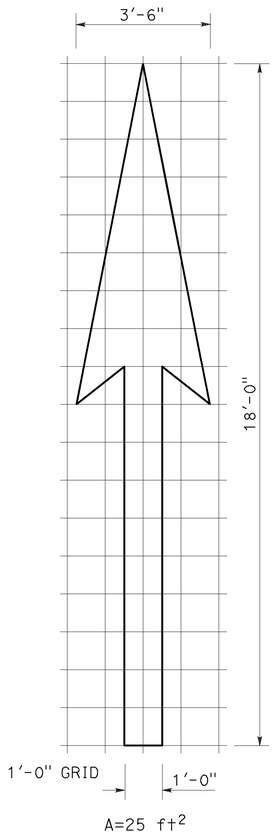

A=25 ft^2

TYPE I 18'-0" ARROW

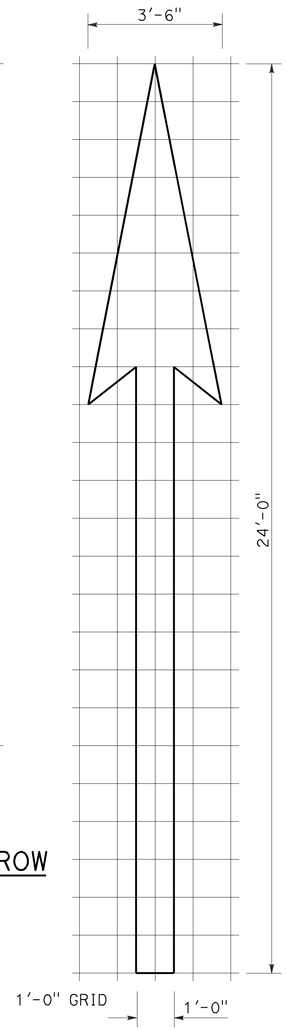

A=31 ft^2

TYPE I 24'-0" ARROW

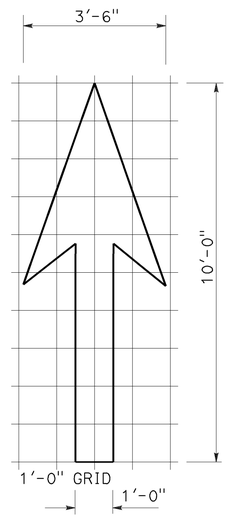

A=14 ft^2

TYPE I 10'-0" ARROW

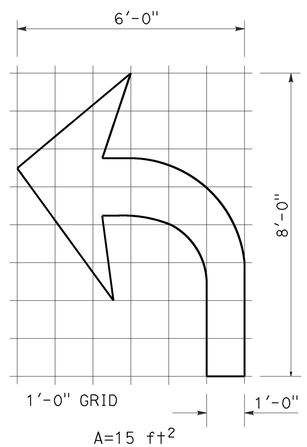

A=15 ft^2

TYPE IV (L) ARROW

(For Type IV (R) arrow, use mirror image)

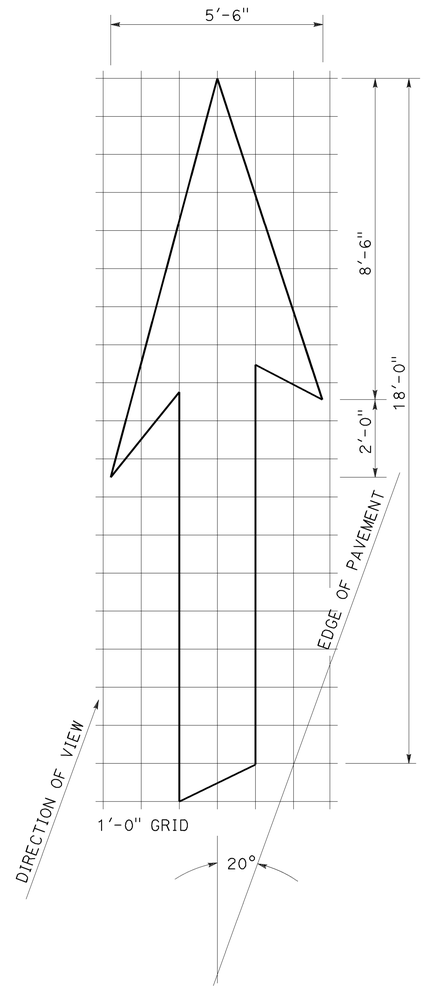

A=42 ft^2

TYPE VI ARROW

Right lane drop arrow
(For left lane, use mirror image)

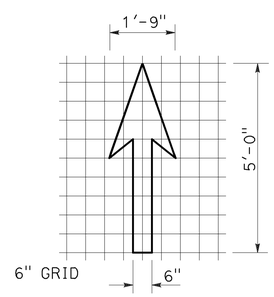

A=3.5 ft^2

BIKE LANE ARROW

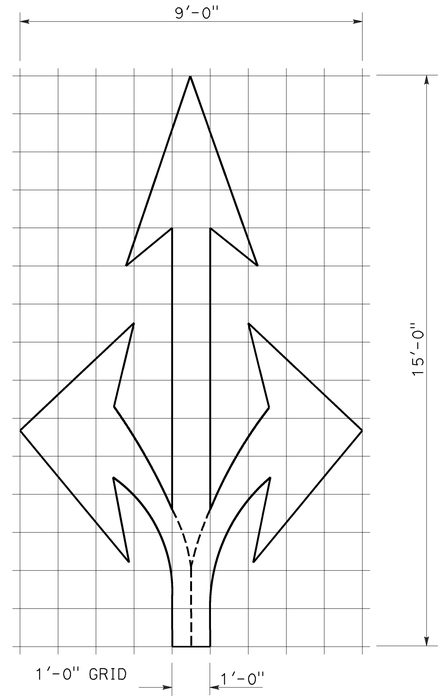

A=36 ft^2

TYPE VIII ARROW

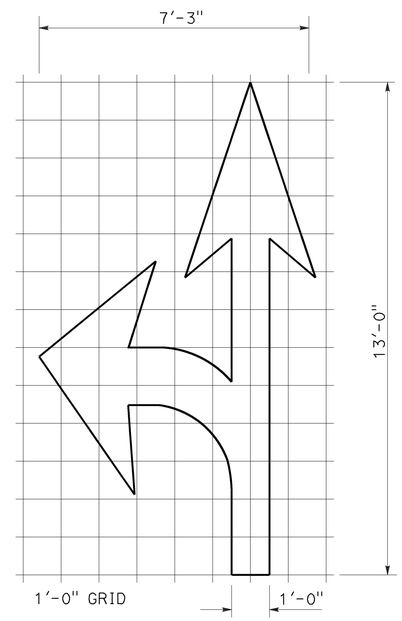

A=27 ft^2

TYPE VII (L) ARROW

(For Type VII (R) arrow, use mirror image)

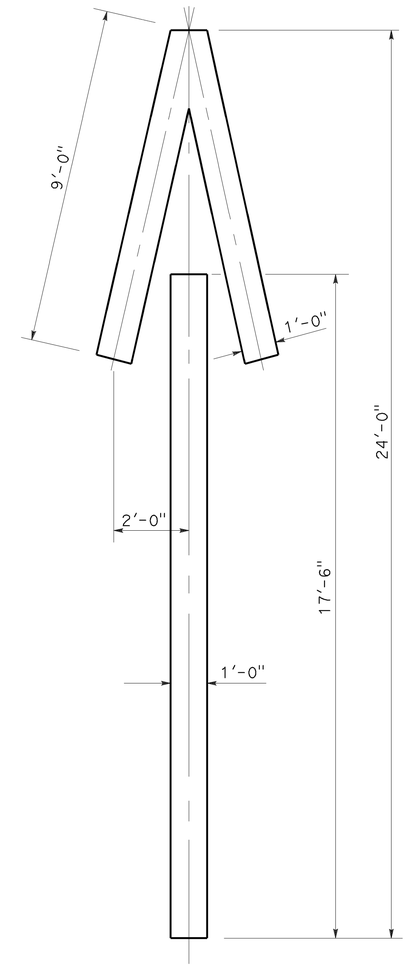

A=33 ft^2

TYPE V ARROW

NOTE:
Minor variations in dimensions may be accepted by the Engineer.

STATE OF CALIFORNIA
DEPARTMENT OF TRANSPORTATION

PAVEMENT MARKINGS ARROWS

NO SCALE

RSP A24A DATED APRIL 20, 2012 SUPERSEDES STANDARD PLAN A24A DATED MAY 20, 2011 - PAGE 13 OF THE STANDARD PLANS BOOK DATED 2010.

REVISED STANDARD PLAN RSP A24A

2010 REVISED STANDARD PLAN RSP A24A

3-14-12

Dist	COUNTY	ROUTE	POST MILES TOTAL PROJECT	SHEET No.	TOTAL SHEETS
04	SM	82, 92	10.4/10.7, R11.0/R11.4	265	370

REGISTERED CIVIL ENGINEER

October 19, 2012
PLANS APPROVAL DATE

REGISTERED PROFESSIONAL ENGINEER Roberta L. McLaughlin No. C40375 Exp. 3-31-13 CIVIL STATE OF CALIFORNIA

THE STATE OF CALIFORNIA OR ITS OFFICERS OR AGENTS SHALL NOT BE RESPONSIBLE FOR THE ACCURACY OR COMPLETENESS OF SCANNED COPIES OF THIS PLAN SHEET.

NOTE: TO ACCOMPANY PLANS DATED 6-28-16

Minor variations in dimensions may be accepted by the Engineer.

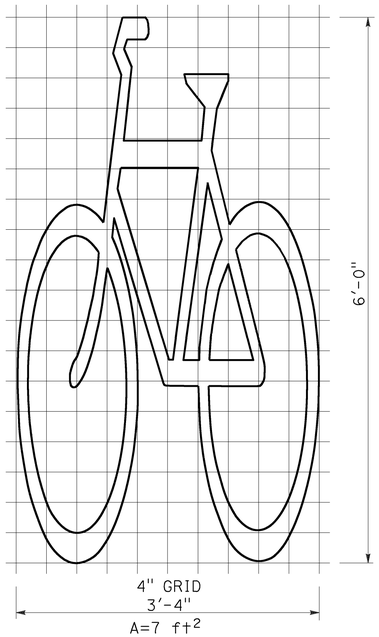

BIKE LANE SYMBOL WITHOUT PERSON

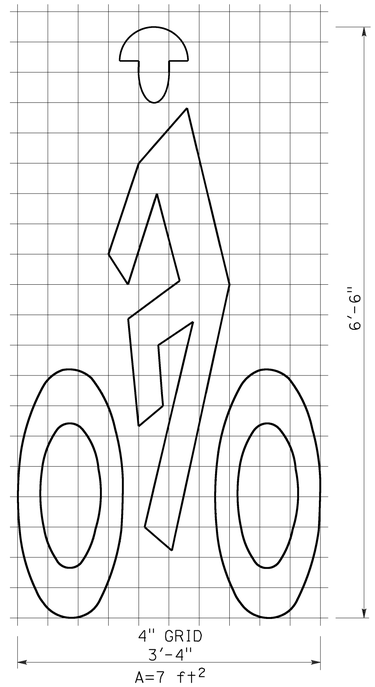

BIKE LANE SYMBOL WITH PERSON

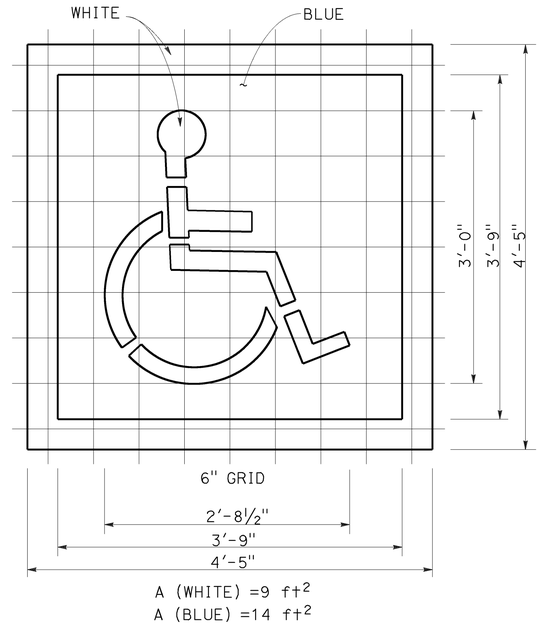

INTERNATIONAL SYMBOL OF ACCESSIBILITY (ISA) MARKING

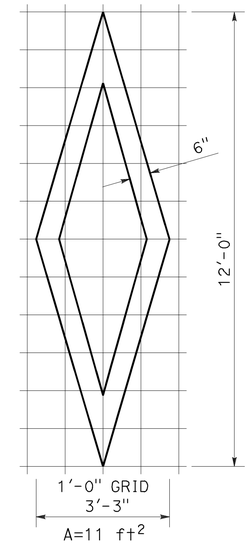

DIAMOND SYMBOL

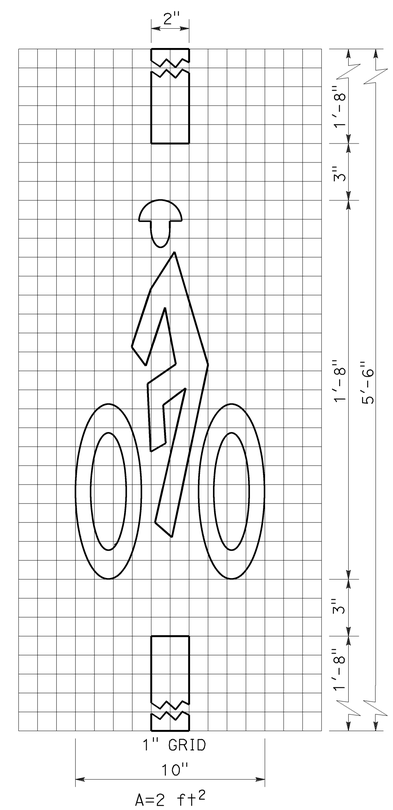

BICYCLE LOOP DETECTOR SYMBOL

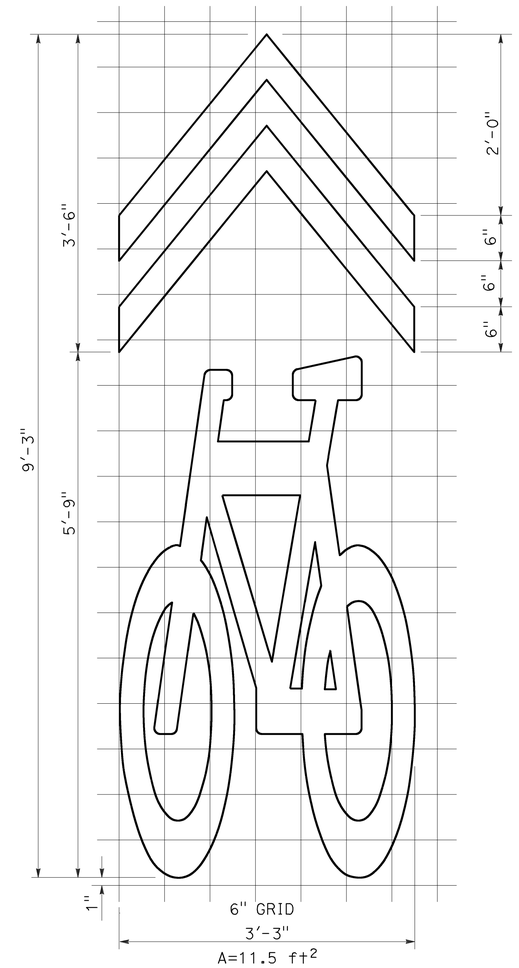

SHARED ROADWAY BICYCLE MARKING

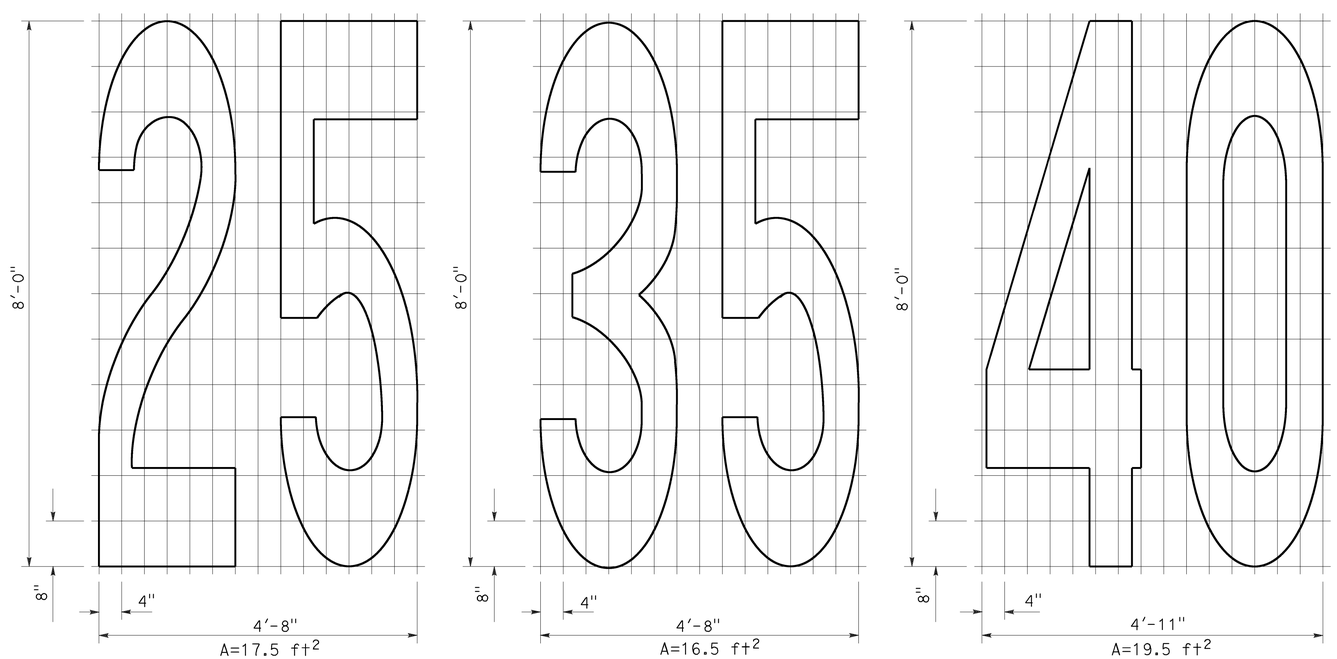

NUMERALS

STATE OF CALIFORNIA
DEPARTMENT OF TRANSPORTATION

PAVEMENT MARKINGS SYMBOLS AND NUMERALS

NO SCALE

RSP A24C DATED OCTOBER 19, 2012 SUPERSEDES STANDARD PLAN A24C DATED MAY 20, 2011 - PAGE 15 OF THE STANDARD PLANS BOOK DATED 2010.

REVISED STANDARD PLAN RSP A24C

2010 REVISED STANDARD PLAN RSP A24C

6-28-12

Dist	COUNTY	ROUTE	POST MILES TOTAL PROJECT	SHEET No.	TOTAL SHEETS
04	SM	82, 92	10.4/10.7, R11.0/R11.4	266	370

REGISTERED CIVIL ENGINEER

July 20, 2012
PLANS APPROVAL DATE

Roberta L. McLaughlin
No. C40375
Exp. 3-31-13
CIVIL
REGISTERED PROFESSIONAL ENGINEER
STATE OF CALIFORNIA

THE STATE OF CALIFORNIA OR ITS OFFICERS OR AGENTS SHALL NOT BE RESPONSIBLE FOR THE ACCURACY OR COMPLETENESS OF SCANNED COPIES OF THIS PLAN SHEET.

TO ACCOMPANY PLANS DATED 6-28-16

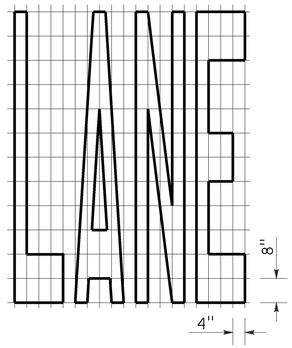

A=24 ft^2

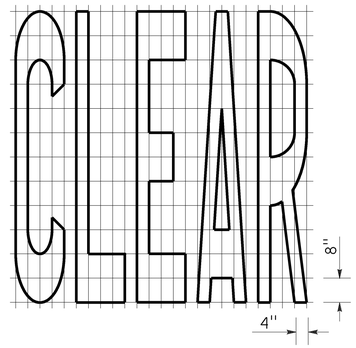

A=27 ft^2

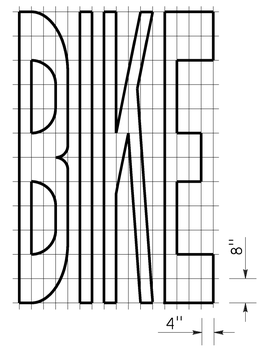

A=21 ft^2

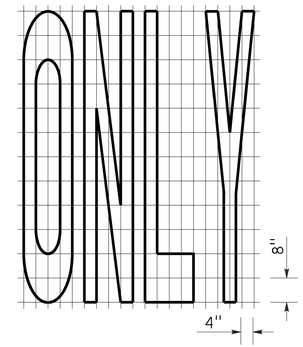

A=22 ft^2

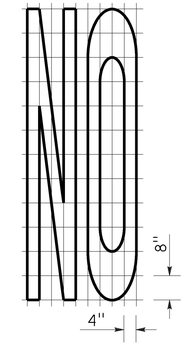

A=14 ft^2

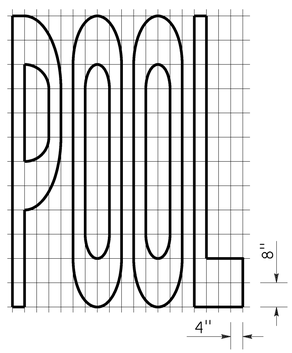

A=23 ft^2

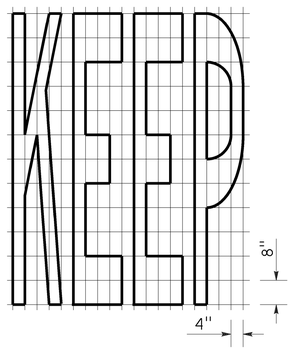

A=24 ft^2

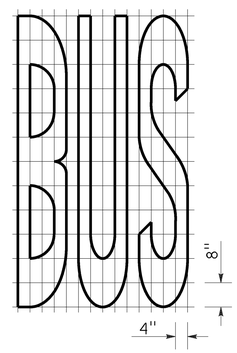

A=20 ft^2

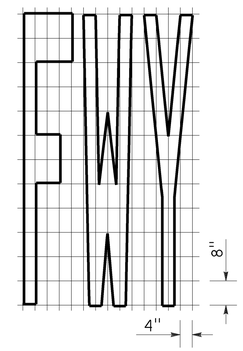

A=16 ft^2

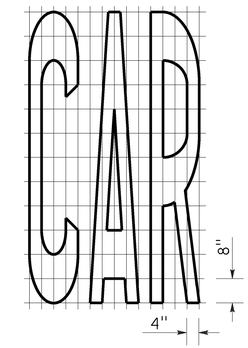

A=17 ft^2

WORD MARKINGS			
ITEM	ft^2	ITEM	ft^2
LANE	24	NO	14
POOL	23	BIKE	21
CAR	17	BUS	20
CLEAR	27	ONLY	22
KEEP	24	FWY	16

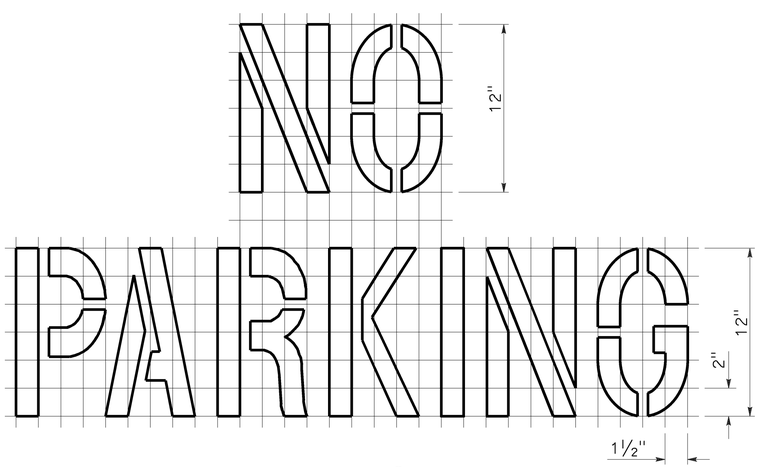

A=2 ft^2
See Notes 6 and 7

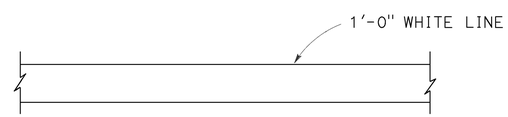

LIMIT LINE (STOP LINE)

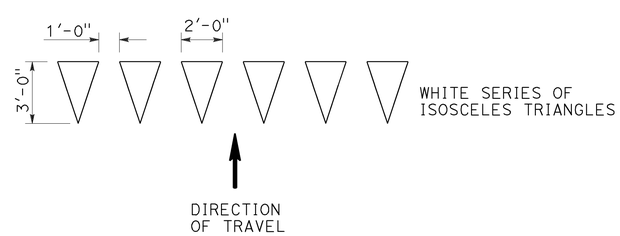

YIELD LINE

NOTES:

1. If a message consists of more than one word, it should read "UP", i.e., the first word should be nearest the driver.
2. The space between words should be at least four times the height of the characters for low speed roads, but not more than ten times the height of the characters. The space may be reduced appropriately where there is limited space because of local conditions.
3. Minor variations in dimensions may be accepted by the Engineer.
4. Portions of a letter, number or symbol may be separated by connecting segments not to exceed 2" in width.
5. The words "NO PARKING" pavement marking is to be used for parking facilities. For typical locations of markings, see Standard Plans A90A and A90B.
6. The words "NO PARKING", shall be painted in white letters no less than 1'-0" high on a contrasting background and located so that it is visible to traffic enforcement officials.

STATE OF CALIFORNIA
DEPARTMENT OF TRANSPORTATION

PAVEMENT MARKINGS WORDS, LIMIT AND YIELD LINES

NO SCALE

RSP A24E DATED JULY 20, 2012 SUPERSEDES STANDARD PLAN A24E
DATED MAY 20, 2011 - PAGE 17 OF THE STANDARD PLANS BOOK DATED 2010.

REVISED STANDARD PLAN RSP A24E

2010 REVISED STANDARD PLAN RSP A24E

6-12-12

Dist	COUNTY	ROUTE	POST MILES TOTAL PROJECT	SHEET No.	TOTAL SHEETS
04	SM	82, 92	10.4/10.7, R11.0/R11.4	267	370

REGISTERED CIVIL ENGINEER

July 20, 2012
PLANS APPROVAL DATE

REGISTERED PROFESSIONAL ENGINEER
Roberta L. McLaughlin
No. C40375
Exp. 3-31-13
CIVIL
STATE OF CALIFORNIA

THE STATE OF CALIFORNIA OR ITS OFFICERS OR AGENTS SHALL NOT BE RESPONSIBLE FOR THE ACCURACY OR COMPLETENESS OF SCANNED COPIES OF THIS PLAN SHEET.

TO ACCOMPANY PLANS DATED 6-28-16

2010 REVISED STANDARD PLAN RSP A24F

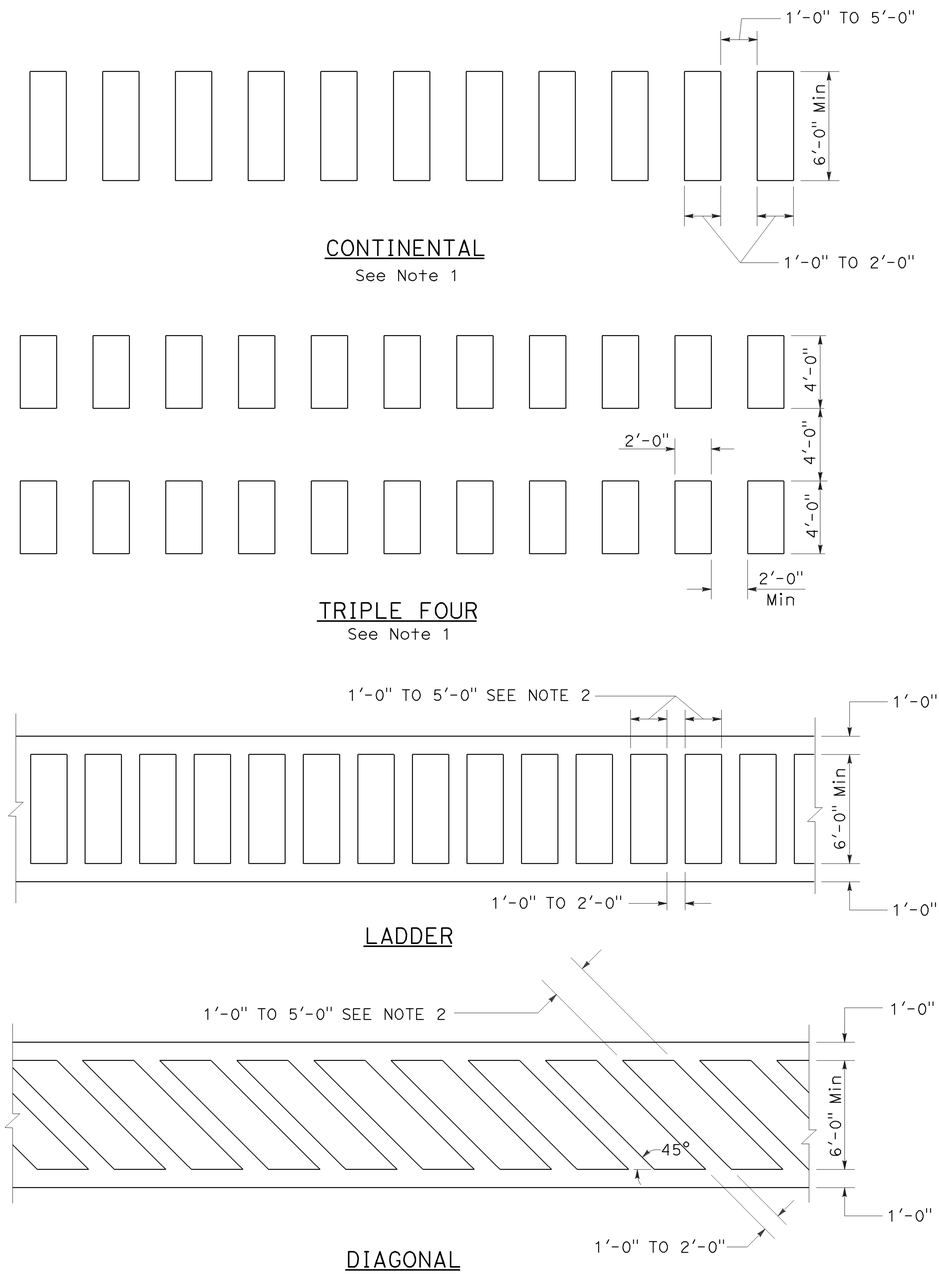

HIGHER VISIBILITY CROSSWALKS

NOTES:

1. Spaces between markings should be placed in wheel tracks of each lane.
2. Spacings not to exceed 2.5 times width of longitudinal line.
3. All crosswalk markings must be white except for those near schools must be yellow.

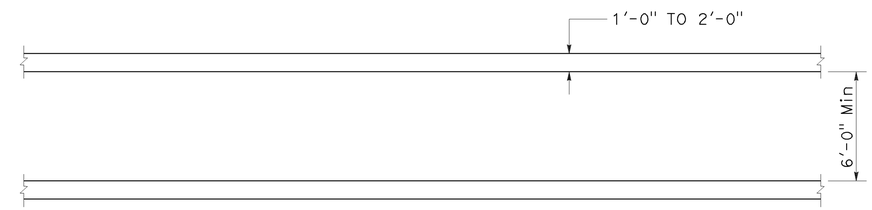

BASIC

STATE OF CALIFORNIA
DEPARTMENT OF TRANSPORTATION

PAVEMENT MARKINGS CROSSWALKS

NO SCALE

RSP A24F DATED JULY 20, 2012 SUPPLEMENTS THE STANDARD PLANS BOOK DATED 2010.

REVISED STANDARD PLAN RSP A24F

Dist	COUNTY	ROUTE	POST MILES TOTAL PROJECT	SHEET No.	TOTAL SHEETS
04	SM	82, 92	10.4/10.7, R11.0/R11.4	268	370

REGISTERED CIVIL ENGINEER

July 18, 2014
PLANS APPROVAL DATE

REGISTERED PROFESSIONAL ENGINEER
Carl M. Duan
No. C59976
Exp. 6-30-16
CIVIL
STATE OF CALIFORNIA

THE STATE OF CALIFORNIA OR ITS OFFICERS OR AGENTS SHALL NOT BE RESPONSIBLE FOR THE ACCURACY OR COMPLETENESS OF SCANNED COPIES OF THIS PLAN SHEET.

TO ACCOMPANY PLANS DATED 6-28-16

2010 REVISED STANDARD PLAN RSP A62DA

DESIGN NOTES:

Design: AASHTO LRFD Bridge Design Specifications, 4th edition with California Amendments. ACPA DESIGN DATA 1, October 2007. INDIRECT DESIGN METHOD

Soil: w Fe = 162 pcf Installation Type 1
w Fe = 168 pcf Installation Types 2 & 3
w = Unit weight of soil (pcf)
Fe = Soil-structure interaction factor

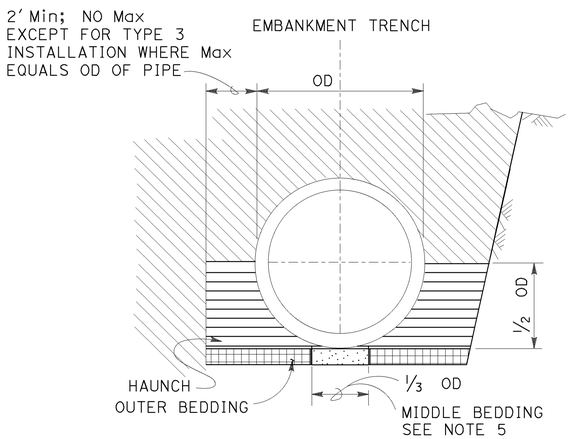

BACKFILL

LEGEND:

- ROADWAY EMBANKMENT
- STRUCTURE BACKFILL (CULVERT) FOR HAUNCH SEE NOTE 6
- STRUCTURE BACKFILL (CULVERT) FOR OUTER BEDDING SEE NOTE 6
- LOOSE BACKFILL
- STRUCTURE EXCAVATION (CULVERT)

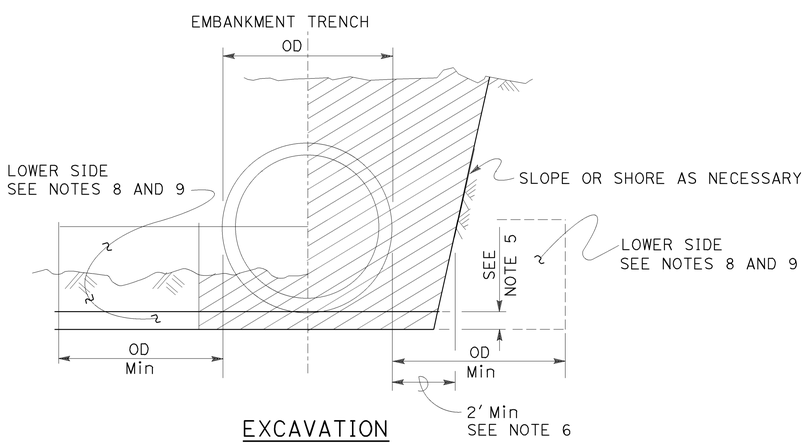

EXCAVATION

INSTALLATION TYPE 1:

The haunch and outer bedding shall be compacted to a minimum 90 percent relative compaction. In addition, the minimum sand equivalent in these areas shall be 30 and the maximum percentage passing the No. 200 sieve size shall be 12.

INSTALLATION TYPE 2:

The haunch and outer bedding shall be compacted to a minimum 90 percent relative compaction. In addition, the minimum sand equivalent in these areas shall be 25.

INSTALLATION TYPE 3:

The haunch and outer bedding shall be compacted to a minimum 85 percent relative compaction. 90 percent relative compaction will be required where the fill over the pipe is less than 4′-0″ or ½ OD. In addition, the minimum sand equivalent in these areas shall be 25 and the material shall not contain rocks, broken concrete, or other solid material exceeding 3″ in greatest dimension.

INSTALLATION TYPE 1

MINIMUM CLASS AND D-LOAD	COVER	
	60″ Dia AND SMALLER	OVER 60″ Dia TO 120″ Dia Max
CLASS II 1000D	14.9′	12.9′
CLASS III 1350D	15.0′ - 21.9′	13.0′ - 18.9′
CLASS III SPECIAL 1700D	22.0′ - 27.9′	19.0′ - 24.9′
CLASS IV 2000D	28.0′ - 32.9′	25.0′ - 29.9′
CLASS IV SPECIAL 2500D	33.0′ - 41.9′	30.0′ - 38.9′
CLASS V 3000D	42.0′ - 49.9′	39.0′ - 46.9′
CLASS V SPECIAL 3600D	50.0′ - 60.0′	47.0′ - 58.0′

INSTALLATION TYPE 2

MINIMUM CLASS AND D-LOAD	COVER	
	60″ Dia AND SMALLER	OVER 60″ Dia TO 120″ Dia Max
CLASS II 1000D	11.9′	9.9′
CLASS III 1350D	12.0′ - 15.9′	10.0′ - 14.9′
CLASS III SPECIAL 1700D	16.0′ - 20.9′	15.0′ - 19.9′
CLASS IV 2000D	21.0′ - 24.9′	20.0′ - 23.9′
CLASS IV SPECIAL 2500D	25.0′ - 31.9′	24.0′ - 30.9′
CLASS V 3000D	32.0′ - 37.9′	31.0′ - 37.9′
CLASS V SPECIAL 3600D	38.0′ - 46.0′	38.0′ - 46.0′

INSTALLATION TYPE 3

MINIMUM CLASS AND D-LOAD	COVER	
	60″ Dia AND SMALLER	OVER 60″ Dia TO 120″ Dia Max
CLASS II 1000D	8.9′	5.9′
CLASS III 1350D	9.0′ - 11.9′	6.0′ - 10.9′
CLASS III SPECIAL 1700D	12.0′ - 15.9′	11.0′ - 13.9′
CLASS IV 2000D	16.0′ - 18.9′	14.0′ - 17.9′
CLASS IV SPECIAL 2500D	19.0′ - 24.9′	18.0′ - 22.9′
CLASS V 3000D	25.0′ - 29.9′	23.0′ - 28.9′
CLASS V SPECIAL 3600D	30.0′ - 36.0′	29.0′ - 35.0′

NOTES:

1. Unless otherwise shown on the plans or specified in the special provision, the Contractor shall have the option of selecting the class of RCP and the type of installation to be used, provided the height of cover does not exceed the value shown for the RCP selected.
   Example: 24″ RCP culvert with maximum cover of 24′-0″ the options are:
   a) Class III Special or stronger with Installation Type 1.
   b) Class IV or stronger with Installation Type 2.
   c) Class IV Special or stronger with Installation Type 3.
   Cover is defined as the maximum vertical distance from top of the pipe to finished grade within the length of any given culvert.
2. The class of RCP and Installation Type selected shall be the same throughout the length of any given culvert.
3. The "length of any culvert" is defined as the culvert between:
   a) Successive drainage structure (inlets, junction boxes, headwalls, etc.).
   b) A drainage structure and the inlet or outlet end of the culvert.
   c) The inlet and outlet end of the culvert when there are no intervening drainage structures.
4. Oval and arch shaped RCP shall not be used.
5. Bedding depth: 1/25 OD Min, not less than 3″.
6. Slurry cement backfill may be substituted for backfill in the outer bedding and haunch areas. If slurry is used, the outer and middle beddings shall be omitted. Prior to installation, the soil under the middle ⅓ of the outside diameter of the pipe shall be softened by scarifying or other means to a minimum depth of 1/25 OD, but not less than 3″. Where slurry cement backfill is used, clear distance to trench wall may be reduced as set forth in the Standard Specifications.
7. Backfill shall be placed full width of excavation except where dimensions are shown for backfill width or thickness. Dimensions shown are minimum.
8. Lower side shall be suitable material as determined by the Engineer. Otherwise it shall be considered unsuitable as set forth in of the Standard Specifications. See Note 9.
9. Where the pipe is placed in a trench, if the trench walls are sloped at 5 vertical to 1 horizontal or steeper for at least 90 percent of the trench height or up to not less than 12″ from the grading plane, the firmness of the soil in the lower side need not be considered.
10. Non-reinforced precast concrete pipe sizes 3′-0″ or smaller may be placed under installation Types 1, 2 or 3.

STATE OF CALIFORNIA
DEPARTMENT OF TRANSPORTATION

EXCAVATION AND BACKFILL CONCRETE PIPE CULVERTS INDIRECT DESIGN METHOD

NO SCALE

RSP A62DA DATED JULY 18, 2014 SUPERSEDES STANDARD PLAN A62DA DATED MAY 20, 2011 - PAGE 24 OF THE STANDARD PLANS BOOK DATED 2010.

REVISED STANDARD PLAN RSP A62DA

Dist	COUNTY	ROUTE	POST MILES TOTAL PROJECT	SHEET No.	TOTAL SHEETS
04	SM	82, 92	10.4/10.7, R11.0/R11.4	269	370

Randell D. Hiatt
REGISTERED CIVIL ENGINEER

July 19, 2013
PLANS APPROVAL DATE

REGISTERED PROFESSIONAL ENGINEER
Randell D. Hiatt
No. C50200
Exp. 6-30-15
CIVIL
STATE OF CALIFORNIA

THE STATE OF CALIFORNIA OR ITS OFFICERS OR AGENTS SHALL NOT BE RESPONSIBLE FOR THE ACCURACY OR COMPLETENESS OF SCANNED COPIES OF THIS PLAN SHEET.

TO ACCOMPANY PLANS DATED 6-28-16

2010 REVISED STANDARD PLAN RSP A77L1

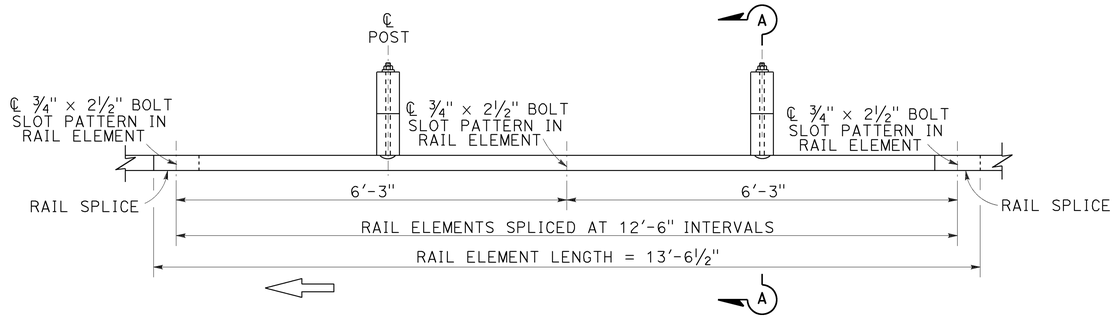

PLAN

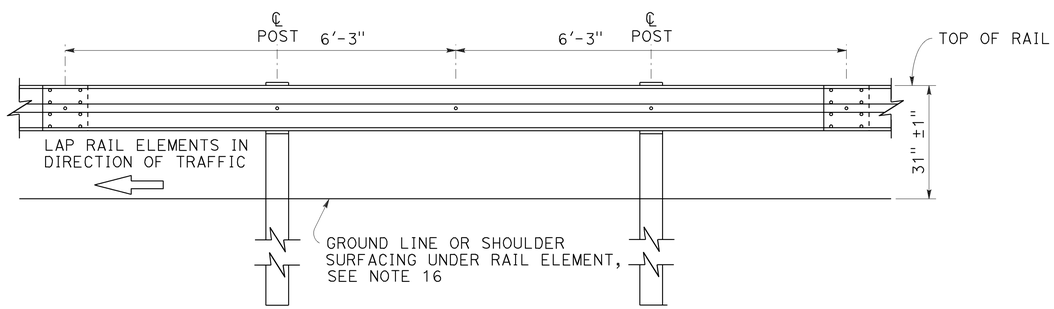

ELEVATION

MIDWEST GUARDRAIL SYSTEM WITH WOOD POST AND BLOCKS

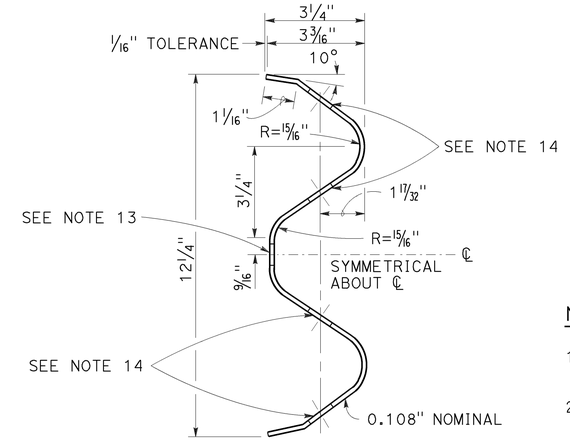

SECTION THRU RAIL ELEMENT

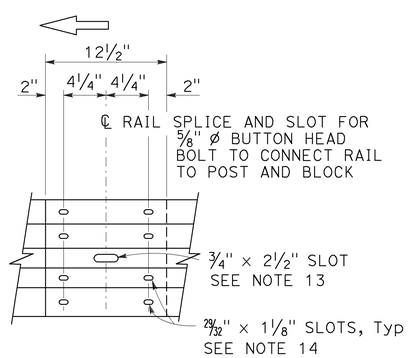

ELEVATION

RAIL ELEMENT SPLICE DETAIL

a) Connect the over lapped end of the rail elements with ⅝" ø × 1⅜" button head oval shoulder splice bolts inserted into the 29⁄32" × 1⅛" slots and bolted together with ⅝" ø recessed hex nuts. Recess of hex nut points toward rail element. A total of 8 bolts and nuts are to be used at each rail splice connection.

b) The ends of the rail elements are to be overlapped in the direction of traffic (see details).

c) Where end cap is to be attached to the end of a rail element, a total of 4 of the above described splice bolts and nuts are to be used.

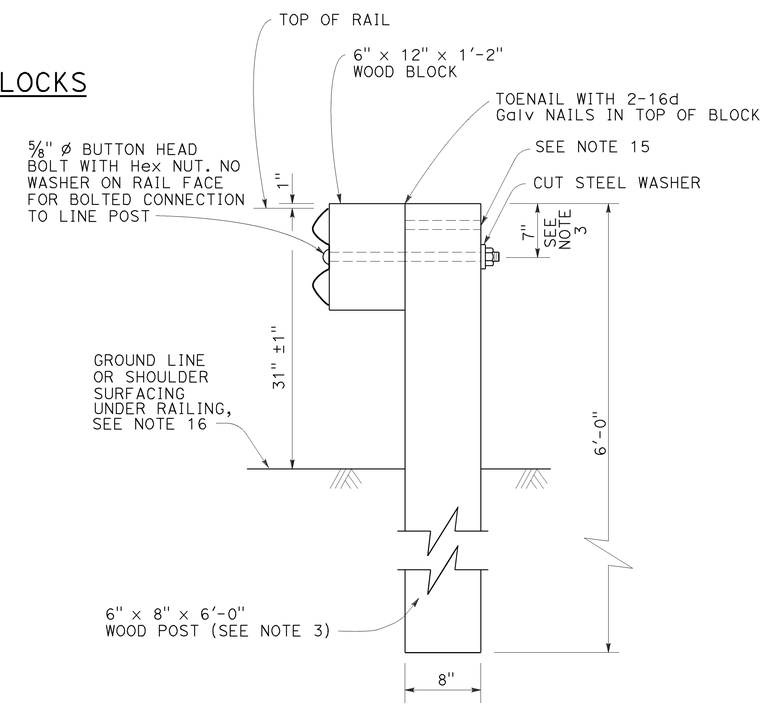

SECTION A-A

TYPICAL WOOD LINE POST INSTALLATION

See Note 4

NOTES:

1. For details of steel post installations, see Revised Standard Plan RSP A77L2.
2. For details of standard hardware used to construct MGS, see Revised Standard Plan RSP A77M1.
3. For details of wood posts and wood blocks used to construct MGS, see Revised Standard Plan RSP A77N1.
4. For additional installation details, see Revised Standard Plan RSP A77N3.
5. MGS post spacing to be 6'-3" center to center, except as otherwise noted.
6. For MGS typical layouts, see the A77P, A77Q and A77R Series of Standard Plans.
7. If railing is connected to terminal system end treatment, use 31" height terminal system end treatment.
8. For MGS end anchor details, see Revised Standard Plans RSP A77S1 and RSP A77T2.
9. For details of MGS transition to bridge railing, see Revised Standard Plan RSP A77U4.
10. For additional details of MSG connection to bridge railing, see Revised Standard Plans RSP A77U1, RSP A77U2 and RSP A77V1.
11. For MGS connection details to abutments and walls, see Revised Standard Plan RSP A77U3.
12. For typical MGS delineation and dike positioning details, see Revised Standard Plan RSP A77N4.
13. Slotted hole for bolted connection of rail element to block and post. See "Section Thru Rail Element".
14. Slotted holes for splice bolts to overlap ends of rail element. See "Section Thru Rail Element".
15. Additional hole in uppermost portion of line post is for potential future adjustments of railing height. See Revised Standard Plan RSP A77N1.
16. Install posts in soil.

STATE OF CALIFORNIA
DEPARTMENT OF TRANSPORTATION

MIDWEST GUARDRAIL SYSTEM STANDARD RAILING SECTION (WOOD POST WITH WOOD BLOCK)

NO SCALE

RSP A77L1 DATED JULY 19, 2013 SUPPLEMENTS STANDARD PLANS BOOK DATED 2010.

REVISED STANDARD PLAN RSP A77L1

Dist	COUNTY	ROUTE	POST MILES TOTAL PROJECT	SHEET No.	TOTAL SHEETS
04	SM	82, 92	10.4/10.7, R11.0/R11.4	270	370

Randell D. Hiatt
REGISTERED CIVIL ENGINEER

July 19, 2013
PLANS APPROVAL DATE

REGISTERED PROFESSIONAL ENGINEER
Randell D. Hiatt
No. C50200
Exp. 6-30-15
CIVIL
STATE OF CALIFORNIA

THE STATE OF CALIFORNIA OR ITS OFFICERS OR AGENTS SHALL NOT BE RESPONSIBLE FOR THE ACCURACY OR COMPLETENESS OF SCANNED COPIES OF THIS PLAN SHEET.

TO ACCOMPANY PLANS DATED 6-28-16

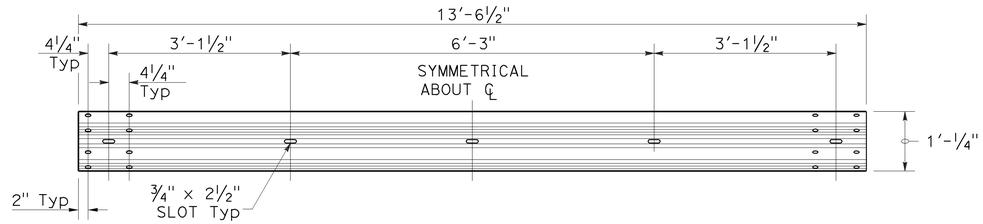

TYPICAL RAIL ELEMENT

NOTE:

1. Slotted holes for splice bolts to overlap ends of rail element.

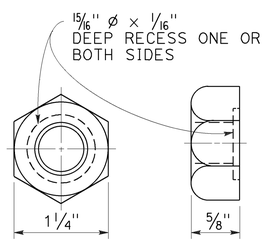

⅝" ø RECESS NUT

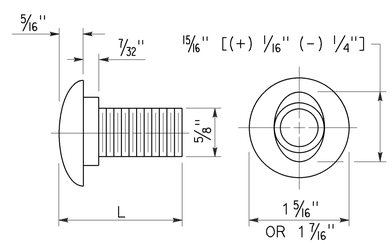

⅝" ø BUTTON HEAD BOLT

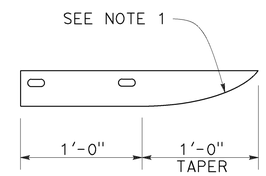

PLAN

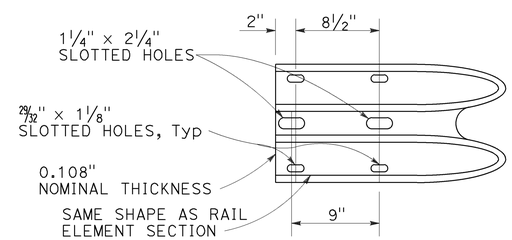

ELEVATION

END CAP
(TYPE A)

BUTTON HEAD BOLT

L	THREAD LENGTH
1⅜"	FULL THREAD LENGTH
2"	FULL THREAD LENGTH
10"	4" Min THREAD LENGTH
18"	4" Min THREAD LENGTH
20"	4" Min THREAD LENGTH
22"	4" Min THREAD LENGTH
26"	4" Min THREAD LENGTH
36"	4" Min THREAD LENGTH
** 2¾"	2" Min THREAD LENGTH
** 19"	4" Min THREAD LENGTH

** For nested rail applications.

STATE OF CALIFORNIA
DEPARTMENT OF TRANSPORTATION

MIDWEST GUARDRAIL SYSTEM STANDARD HARDWARE

NO SCALE

RSP A77M1 DATED JULY 19, 2013 SUPPLEMENTS THE STANDARD PLANS BOOK DATED 2010.

REVISED STANDARD PLAN RSP A77M1

2010 REVISED STANDARD PLAN RSP A77M1

7-3-13

Dist	COUNTY	ROUTE	POST MILES TOTAL PROJECT	SHEET No.	TOTAL SHEETS
04	SM	82, 92	10.4/10.7, R11.0/R11.4	271	370

Randell D. Hiatt
REGISTERED CIVIL ENGINEER

July 19, 2013
PLANS APPROVAL DATE

REGISTERED PROFESSIONAL ENGINEER
Randell D. Hiatt
No. C50200
Exp. 6-30-15
CIVIL
STATE OF CALIFORNIA

THE STATE OF CALIFORNIA OR ITS OFFICERS OR AGENTS SHALL NOT BE RESPONSIBLE FOR THE ACCURACY OR COMPLETENESS OF SCANNED COPIES OF THIS PLAN SHEET.

TO ACCOMPANY PLANS DATED 6-28-16

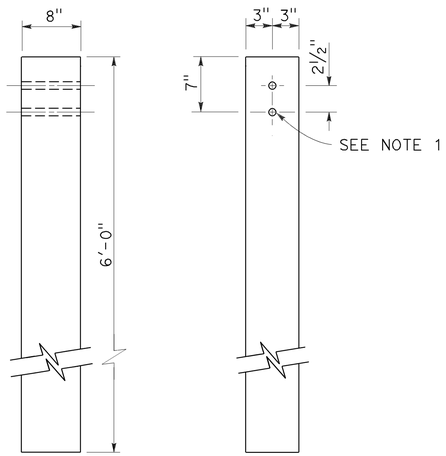

SIDE FRONT

6" x 8" WOOD POST
See Note 3

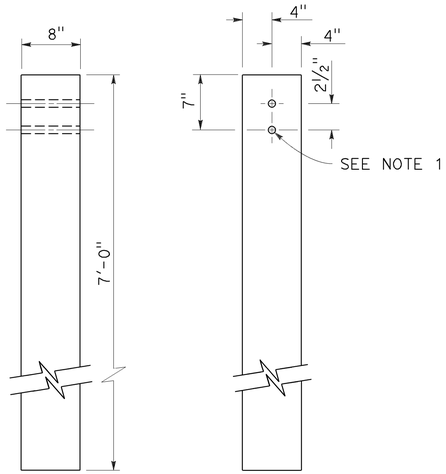

SIDE FRONT

8" x 8" WOOD POST
See Note 4

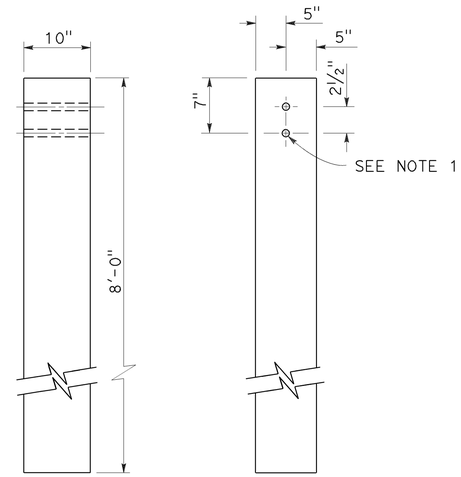

SIDE FRONT

10" x 10" WOOD POST
See Note 5

NOTES:

1. All holes in wood posts and blocks shall be 3/4" Dia ± 1/16".
2. Dimensions shown for wood post are nominal.
3. This post and block combination used for standard line post sections of MGS.
4. This post and 8" x 12" block combination used for line post sections of MGS on narrow roadways.
5. This post and 8" x 12" block combination is typically used where strengthened line post sections of MGS are warranted to shield fixed objects.
6. See Revised Standard Plan RSP A77L3 for use of 6" x 8" and 8" x 8" wood blocks.

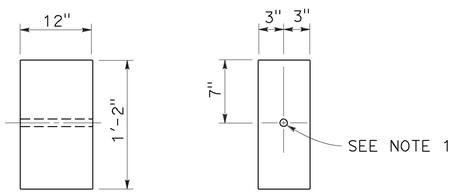

SIDE FRONT

6" x 12" WOOD BLOCK
See Note 3

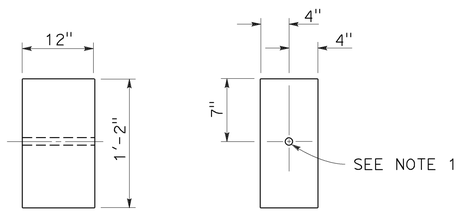

SIDE FRONT

8" x 12" WOOD BLOCK

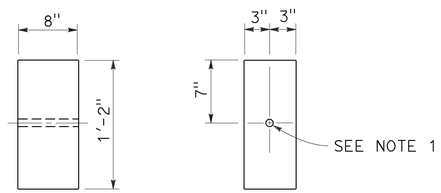

SIDE FRONT

6" x 8" WOOD BLOCK
Only for use with metal beam guard rail see Note 6

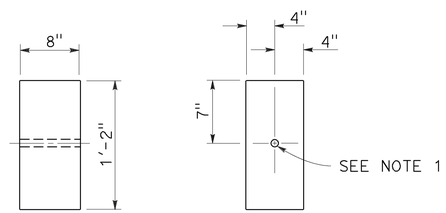

SIDE FRONT

8" x 8" WOOD BLOCK
Only for use with metal beam guard rail see Note 6

STATE OF CALIFORNIA
DEPARTMENT OF TRANSPORTATION

MIDWEST GUARDRAIL SYSTEM WOOD POST AND WOOD BLOCK DETAILS

NO SCALE

RSP A77N1 DATED JULY 19, 2013 SUPPLEMENTS THE STANDARD PLANS BOOK DATED 2010.

REVISED STANDARD PLAN RSP A77N1

2010 REVISED STANDARD PLAN RSP A77N1

7-3-13

Dist	COUNTY	ROUTE	POST MILES TOTAL PROJECT	SHEET No.	TOTAL SHEETS
04	SM	82, 92	10.4/10.7, R11.0/R11.4	272	370

Randell D. Hiatt
REGISTERED CIVIL ENGINEER

August 14, 2015
PLANS APPROVAL DATE

REGISTERED PROFESSIONAL ENGINEER
Randell D. Hiatt
No. C50200
Exp. 6-30-17
CIVIL
STATE OF CALIFORNIA

THE STATE OF CALIFORNIA OR ITS OFFICERS OR AGENTS SHALL NOT BE RESPONSIBLE FOR THE ACCURACY OR COMPLETENESS OF SCANNED COPIES OF THIS PLAN SHEET.

TO ACCOMPANY PLANS DATED 6-28-16

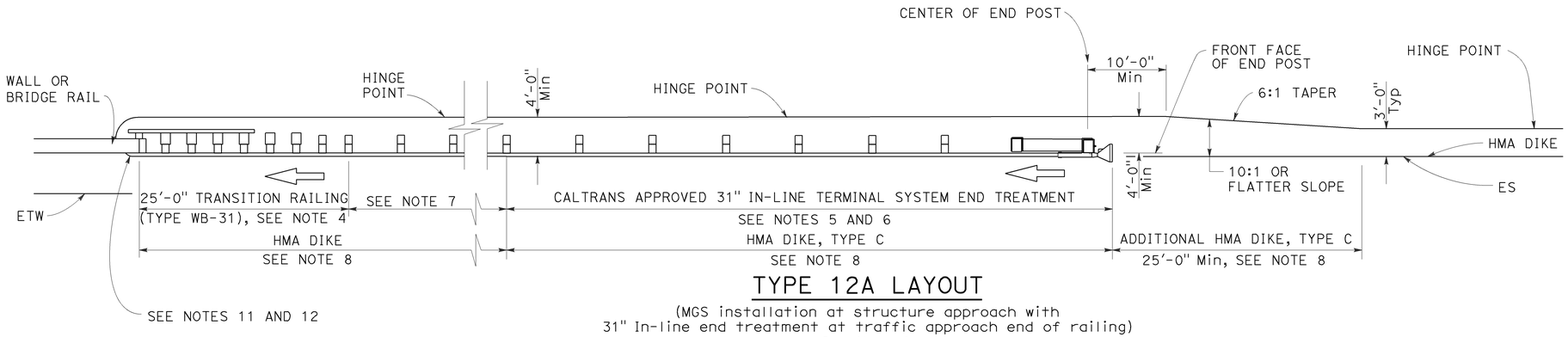

TYPE 12A LAYOUT

(MGS installation at structure approach with
31" In-line end treatment at traffic approach end of railing)
See Note 9

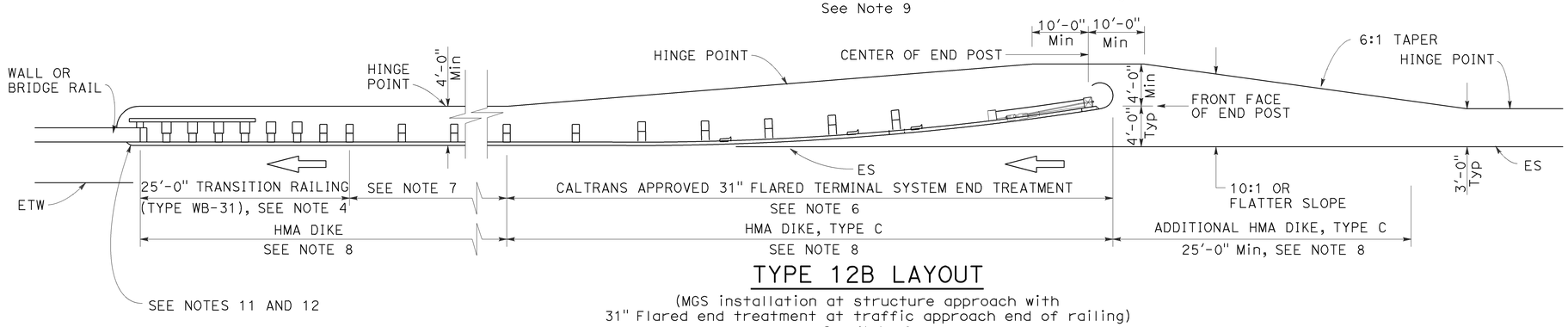

TYPE 12B LAYOUT

(MGS installation at structure approach with
31" Flared end treatment at traffic approach end of railing)
See Note 9

NOTES:

1. Line post, blocks and hardware to be used are shown on Revised Standard Plans RSP A77L1, RSP A77L2, RSP A77M1, RSP A77N1 and RSP A77N2.
2. MGS post spacing to be 6'-3" center to center, except as otherwise noted.
3. Except as noted, line posts are 6" x 8" x 6'-0" wood with 6" x 12" x 1'-2" wood blocks. W6 x 8.5 or W6 x 9 steel posts, 6'-0" in length, with 6" x 12" x 1'-2" notched wood blocks or plastic blocks may be used for 6" x 8" x 6'-0" wood posts with 6" x 12" x 1'-2" wood blocks where applicable and when specified.
4. For Transition Railing (Type WB-31) details for Types 12A and 12B Layouts, see Revised Standard Plan RSP A77U4.
5. 31" in-line terminal system end treatments are used where site conditions will not accommodate a 31" flared end treatment.
6. The type of 31" terminal system end treatment to be used will be shown on the Project Plans.
7. Dependent on site conditions (embankment height, side slopes, or other fixed objects), it may be advisable to construct additional guard railing (a length equal to multiples of 12'-6" with 6'-3" post spacing) between the transition railing and end treatment. A 12.5 degree angle of departure can be drawn on the Project Plans from the edge of traveled way through the outer most point of the fixed object to determine the additional length of railing needed.
8. Where placement of dike is required with guard railing installations, see Revised Standard Plan RSP A77N4 for dike positioning details.
9. Type 12A or Type 12B Layouts are typically used:
   a. To the right of approaching traffic, at the end of a structure, on two-lane conventional highway where the roadbed width across the structure is less than 40 feet.
   b. To the left of approaching traffic, at the end of a structure, on two-lane conventional highway where the roadbed width across the structure is less than 40 feet.
   c. To the right of approaching traffic at the end of each structure on multilane freeways or expressways with separate adjacent or parallel bridges.
   d. To the right of approaching traffic at the end of the structure on multilane freeways or expressways with decked median on the bridge.
10. See Revised Standard Plan RSP A77Q3 for typical layout used left of approaching traffic at the ends of each structure on multilane freeways or expressways with separate adjacent or parallel bridges.
11. For additional details of typical connections to bridge rail, see Connection Detail AA on Revised Standard Plans RSP A77U1 and RSP A77U2 and Connection Detail FF on Revised Standard Plans RSP A77V1 and RSP A77V2.
12. For additional details of a typical connection to walls or abutments, see Revised Standard Plan RSP A77U3.

STATE OF CALIFORNIA
DEPARTMENT OF TRANSPORTATION

MIDWEST GUARDRAIL SYSTEM TYPICAL LAYOUTS FOR STRUCTURE APPROACH

NO SCALE

RSP A77Q1 DATED AUGUST 14, 2015 SUPERSEDES RSP A77Q1 DATED JULY 19, 2013 THAT SUPPLEMENTS THE STANDARD PLANS BOOK DATED 2010.

REVISED STANDARD PLAN RSP A77Q1

2010 REVISED STANDARD PLAN RSP A77Q1

8-12-15

Dist	COUNTY	ROUTE	POST MILES TOTAL PROJECT	SHEET No.	TOTAL SHEETS
04	SM	82, 92	10.4/10.7, R11.0/R11.4	273	370

Randell D. Hiatt
REGISTERED CIVIL ENGINEER

July 19, 2013
PLANS APPROVAL DATE

REGISTERED PROFESSIONAL ENGINEER Randell D. Hiatt No. C50200 Exp. 6-30-15 CIVIL STATE OF CALIFORNIA

THE STATE OF CALIFORNIA OR ITS OFFICERS OR AGENTS SHALL NOT BE RESPONSIBLE FOR THE ACCURACY OR COMPLETENESS OF SCANNED COPIES OF THIS PLAN SHEET.

TO ACCOMPANY PLANS DATED 6-28-16

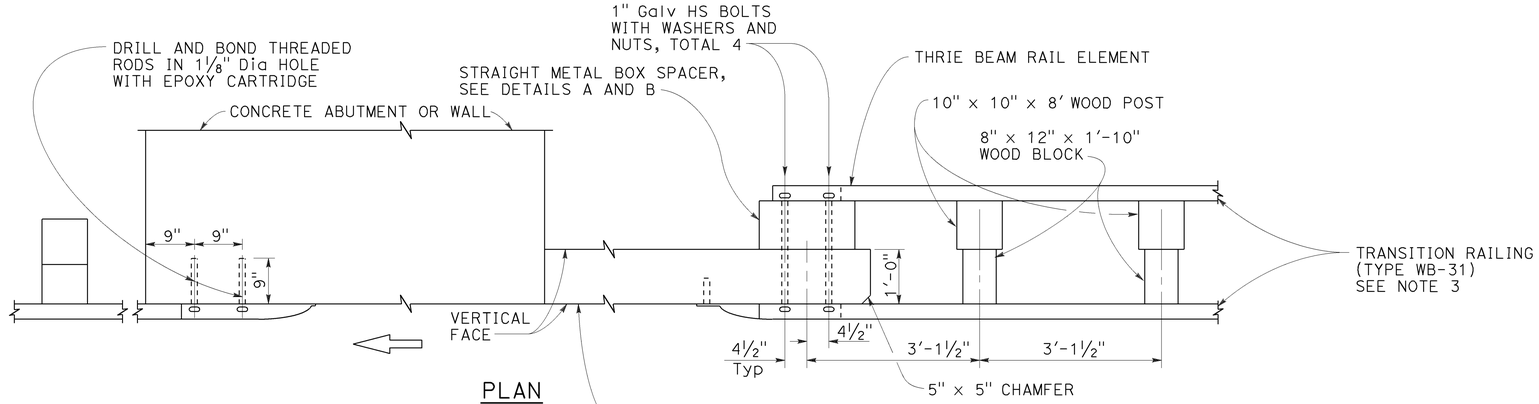

PLAN

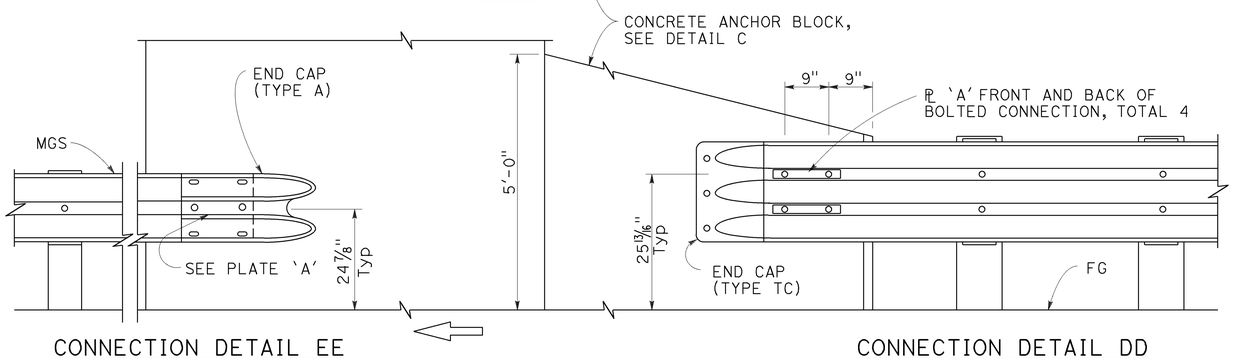

CONNECTION DETAIL EE
See Note 5

CONNECTION DETAIL DD
See Note 4

ELEVATION

MIDWEST GUARDRAIL SYSTEM CONNECTION TO ABUTMENT OR WALL

NOTES:

1. These connection details apply to abutments and walls.
2. Additional details of posts, blocks and hardware are shown on Revised Standard Plans RSP A77M1, RSP A77N1 and RSP A77N2.
3. For additional details of Transition Railing (Type WB-31), see Revised Standard Plan RSP A77U4. Transition Railing (Type WB-31) transitions the 12 gauge MGS railing section to a heavier gage nested thrie beam railingsection which is connected to the concrete anchor block.
4. For typical use of Connection Details DD, see Layout Types 12A and 12B on Revised Standard Plan RSP A77Q1 and Layout Types 12C and 12D on Revised Standard Plan RSP A77Q2.
5. For typical use of Connection Detail EE, see Layout Type 12D on Revised Standard Plan RSP A77Q2 and Layout Type 12DD on Revised Standard Plan RSP A77Q5.

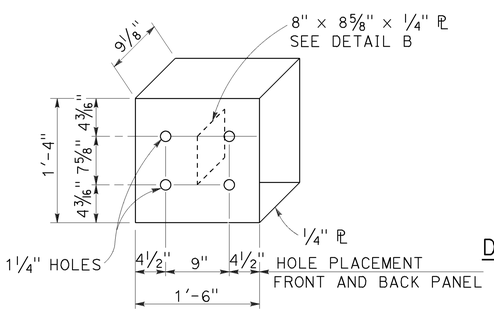

DETAIL A

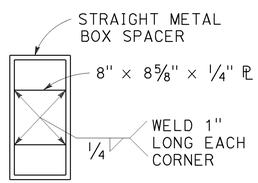

DETAIL B

STRAIGHT METAL BOX SPACER

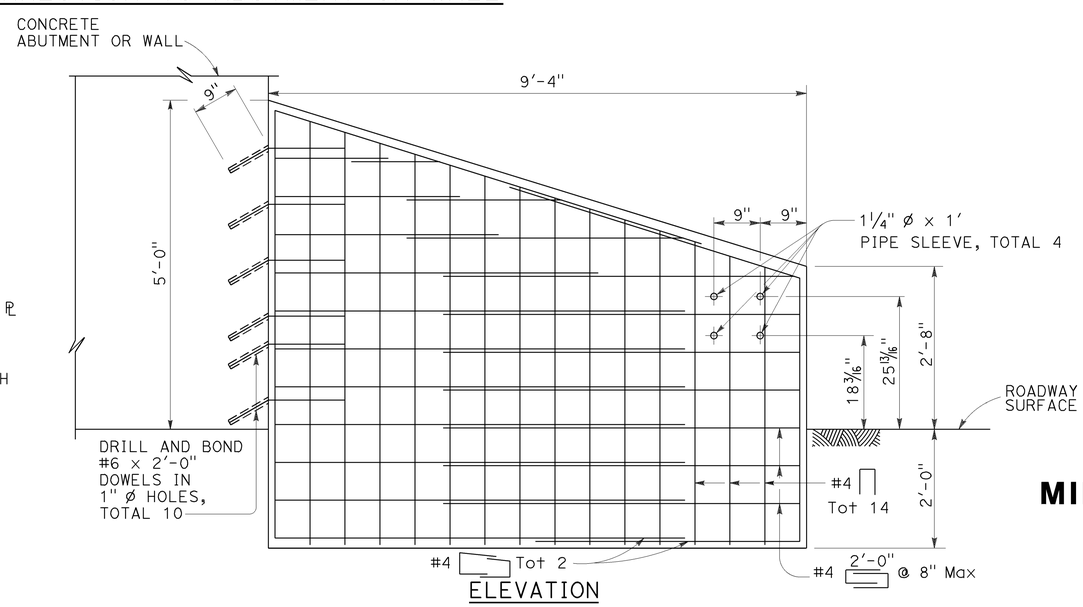

ELEVATION

ANCHOR BLOCK FOR TRANSITION RAILING CONNECTION

DETAIL C

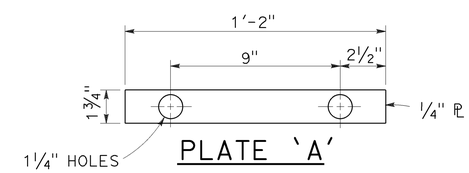

PLATE 'A'

STATE OF CALIFORNIA
DEPARTMENT OF TRANSPORTATION

MIDWEST GUARDRAIL SYSTEM CONNECTIONS TO ABUTMENTS AND WALLS

NO SCALE

RSP A77U3 DATED JULY 19, 2013 SUPPLEMENTS THE STANDARD PLANS BOOK DATED 2010.

REVISED STANDARD PLAN RSP A77U3

2010 REVISED STANDARD PLAN RSP A77U3

7-8-13

Dist	COUNTY	ROUTE	POST MILES TOTAL PROJECT	SHEET No.	TOTAL SHEETS
04	SM	82, 92	10.4/10.7, R11.0/R11.4	274	370

Randell D. Hiatt
REGISTERED CIVIL ENGINEER

January 23, 2015
PLANS APPROVAL DATE

REGISTERED PROFESSIONAL ENGINEER
Randell D. Hiatt
No. C50200
Exp. 6-30-15
CIVIL
STATE OF CALIFORNIA

THE STATE OF CALIFORNIA OR ITS OFFICERS OR AGENTS SHALL NOT BE RESPONSIBLE FOR THE ACCURACY OR COMPLETENESS OF SCANNED COPIES OF THIS PLAN SHEET.

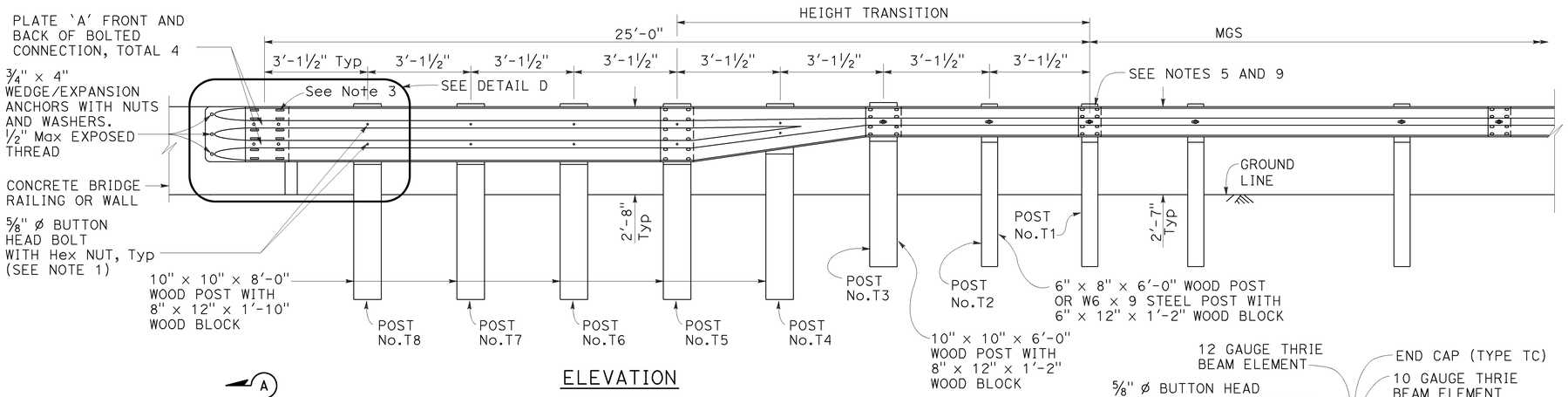

ELEVATION

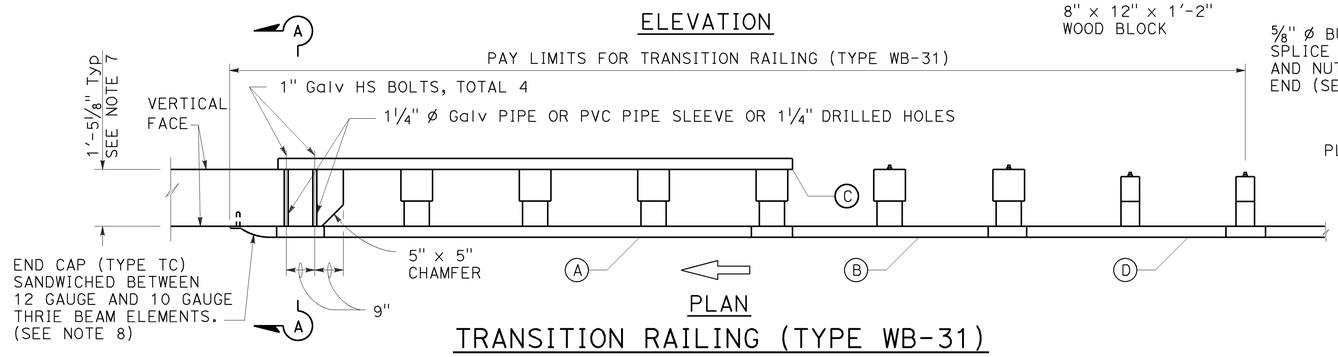

PLAN

TRANSITION RAILING (TYPE WB-31)

(No Blockout Attachment)

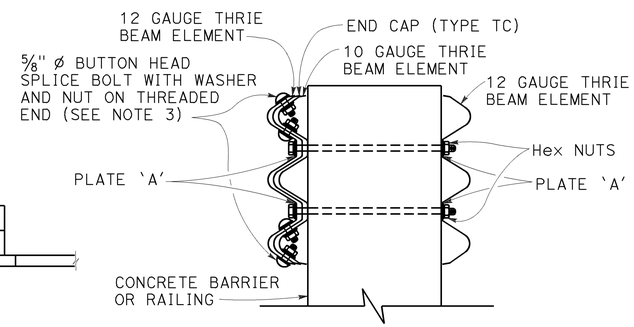

SECTION A-A

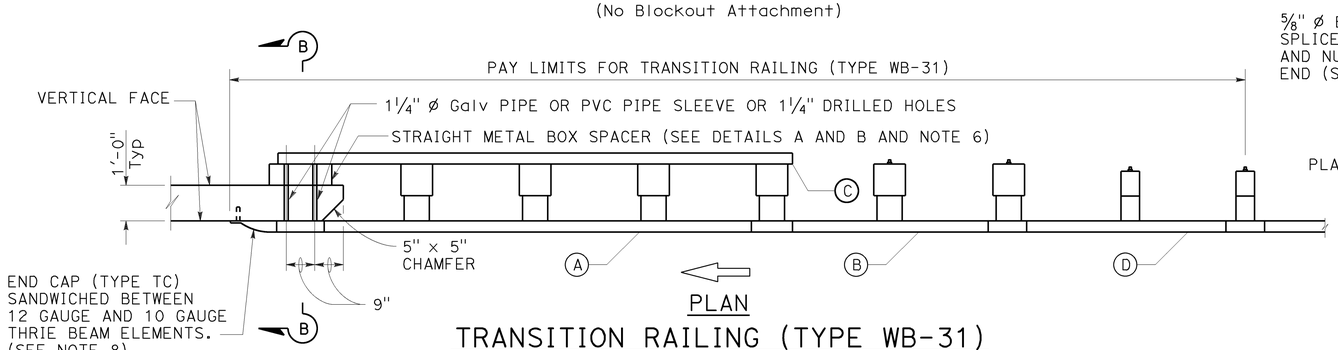

PLAN

TRANSITION RAILING (TYPE WB-31)

(Blockout Attachment)

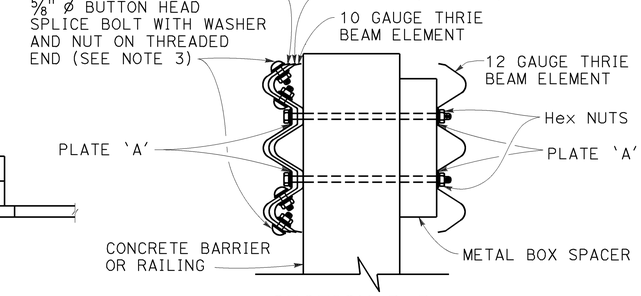

SECTION B-B

NOTES:

TO ACCOMPANY PLANS DATED 6-28-16

1. Use 5/8" ø Button head bolts and hex nuts for connections to posts. No washer on rail face for bolted connections to post.
2. The nested rail elements, end cap, and 'W' beam to thrie beam element may be spliced together prior to bolting the elements to the wood post and concrete barrier or railing.
3. Exterior splice bolt holes for rail element splices at Post No. T5 and the connection to the concrete barrier or railing shall be the standard 29/32" x 1 1/8" slot size. Interior splice bolt holes at these locations may be increased up to 1 1/4" ø. Only the top 4 and the bottom 4 splice bolts with washers and nuts are required for rail splices at Post No. T5 and the connection to the concrete barrier or railing.
4. The top elevation of Posts No. T2 through No. T7 shall not project more than 1" above the top elevation of the rail element.
5. Typically, the railing connected to Transition Railing (Type WB-31) will be either standard railing section of MGS with height transition ratio of 150:1 or a Caltrans approved 31" end treatment attached to Post No. T1.
6. The depth of the metal box spacer varies from the 9 1/8" to 1 1/2" and is dependent on the width of the concrete railing or wall. The combined dimension for the depth of the metal box spacer plus the width of railing or wall is typically 21 1/8". Where the space between the backside of the concrete railing or wall and the rear thrie beam element is less than 1 1/2", metal plates similar to Plate 'A' are to be used as spacers.
7. Where the width of the concrete railing or wall is greater than 17 1/8", wood blocks are to be used to fill the space created between the backside of Posts No. T5 through No. T8 and the rear thrie beam element. These wood blocks shall be 8" in width and 1'-2" in length. The dimension between the front thrie beam element and the rear thrie beam element is to match the width of the concrete railing or wall.
8. End cap may be installed over 12 gauge and 10 gauge thrie beam elements where transition railing is installed on the departure end of bridge railing.
9. Conform standard railing section height to 31" at Post No. T1 using height transition ratio of 150:1.

LEGEND:

(A) NESTED THRIE BEAM ELEMENTS (ONE 12 GAUGE ELEMENT NESTED OVER ONE 10 GAUGE ELEMENT).

(B) ONE ASYMMETRICAL 10 GAUGE "W" BEAM TO THRIE BEAM ELEMENT.

(C) ONE 12 GAUGE THRIE BEAM ELEMENT.

(D) ONE 10 GAUGE "W" BEAM RAIL ELEMENT (7'-3 1/2"LENGTH)

10 GAUGE = 0.138" THICK
12 GAUGE = 0.108" THICK

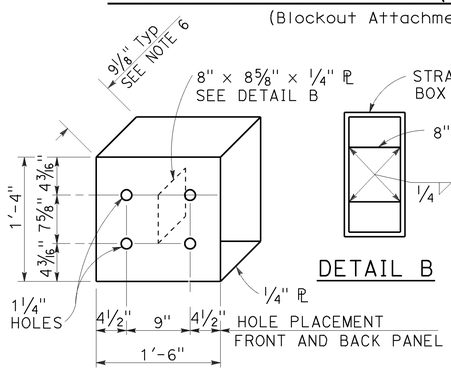

DETAIL A

STRAIGHT METAL BOX SPACER

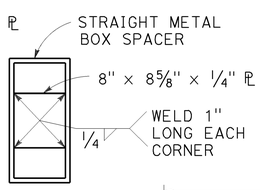

DETAIL B

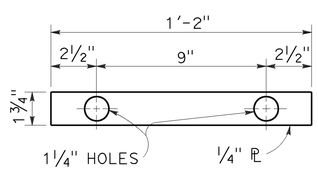

DETAIL C

PLATE 'A'

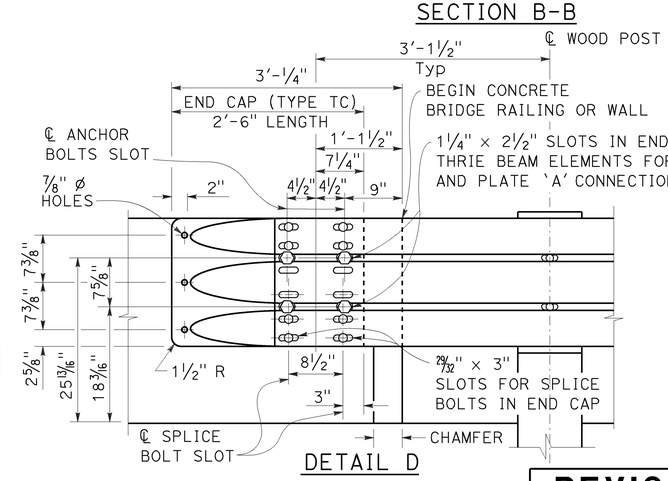

DETAIL D

STATE OF CALIFORNIA
DEPARTMENT OF TRANSPORTATION

MIDWEST GUARDRAIL SYSTEM TRANSITION RAILING (TYPE WB-31)

NO SCALE

RSP A77U4 DATED JANUARY 23, 2015 SUPERSEDES RSP A77U4 DATED NOVEMBER 15, 2013 AND RSP A77U4 DATED JULY 19, 2013 THAT SUPPLEMENTS THE STANDARD PLANS BOOK DATED 2010.

REVISED STANDARD PLAN RSP A77U4

2010 REVISED STANDARD PLAN RSP A77U4

1-8-15

Dist	COUNTY	ROUTE	POST MILES TOTAL PROJECT	SHEET No.	TOTAL SHEETS
04	SM	82, 92	10.4/10.7, R11.0/R11.4	275	370

Randell D. Hiatt
REGISTERED CIVIL ENGINEER

October 30, 2015
PLANS APPROVAL DATE

REGISTERED PROFESSIONAL ENGINEER Randell D. Hiatt No. C50200 Exp. 6-30-17 CIVIL STATE OF CALIFORNIA

THE STATE OF CALIFORNIA OR ITS OFFICERS OR AGENTS SHALL NOT BE RESPONSIBLE FOR THE ACCURACY OR COMPLETENESS OF SCANNED COPIES OF THIS PLAN SHEET.

TO ACCOMPANY PLANS DATED 6-28-16

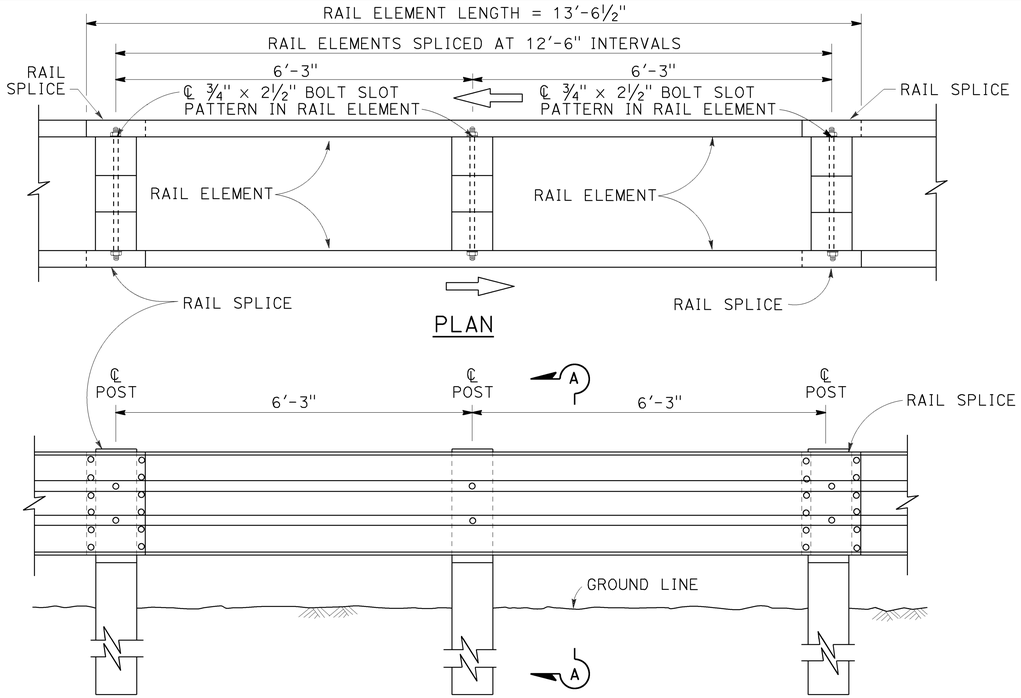

PLAN

ELEVATION

DOUBLE THRIE BEAM BARRIER

(Wood post and blocks)
See Note 1

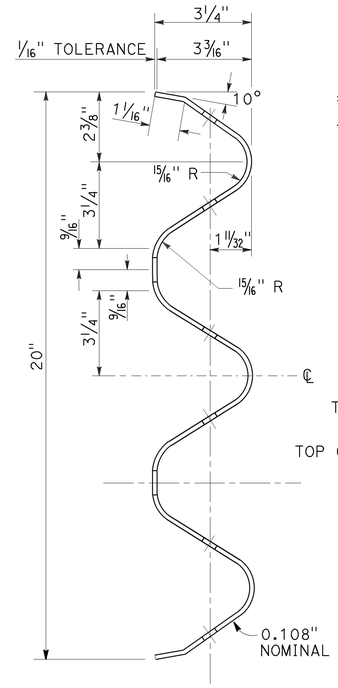

SECTION THRU RAIL ELEMENT

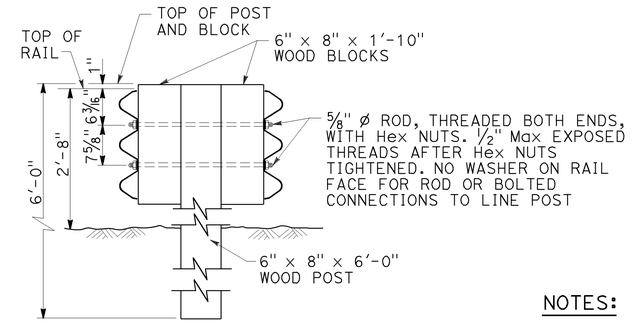

SECTION A-A

TYPICAL WOOD LINE POST INSTALLATION

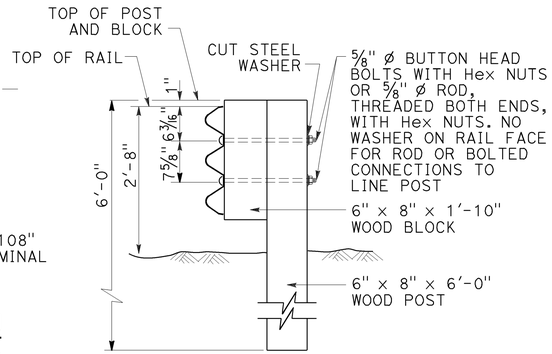

Where bolts are used, install so that the threaded end of the bolts and nuts are placed away from traffic side of rail.

SECTION B-B

TYPICAL WOOD LINE POST INSTALLATION

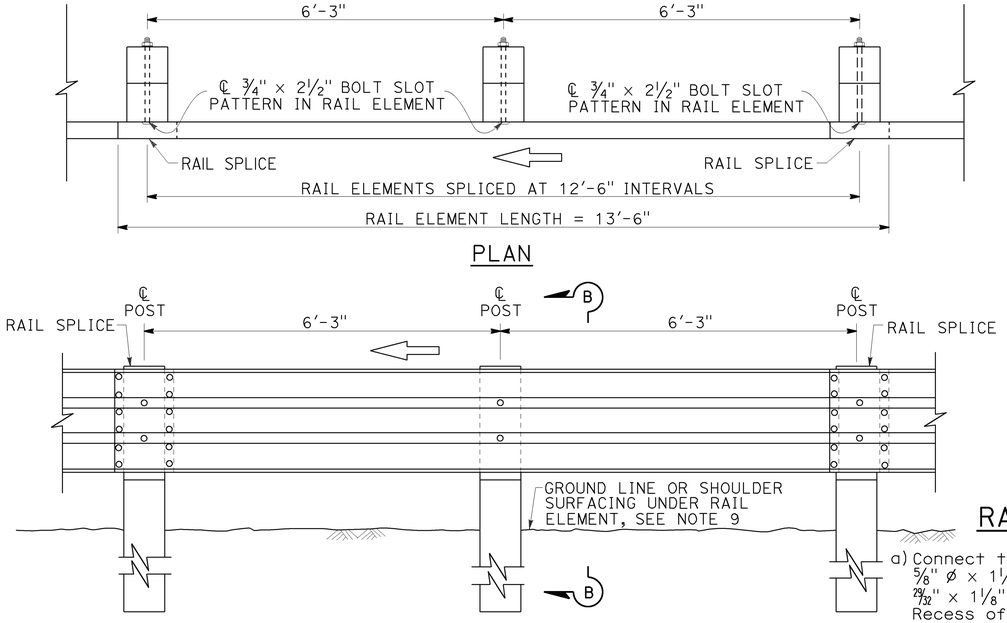

PLAN

ELEVATION

SINGLE THRIE BEAM BARRIER

(Wood post and blocks)
See Note 1

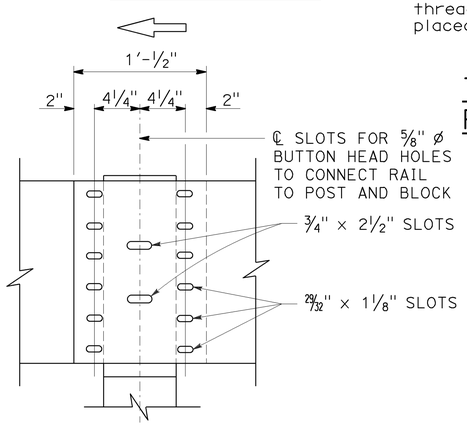

ELEVATION

RAIL ELEMENT SPLICE DETAIL

a) Connect the overlapped ends of the thrie beam rail elements with ⅝" ø x 1¼" button head oval shoulder bolts inserted into the 29⁄32" x 1⅛" slots and bolted together with ⅝" ø recessed hex nuts. Recess of hex nut points toward rail element. A total of 12 bolts and nuts are to be used at each rail splice connection.

b) The ends of the rail elements are to be overlapped in the direction of traffic (see details).

c) Where end cap is to be attached to the end of a rail element, a total of 4 of the above described splice bolts and nuts are to be used. Where a return cap is to be attached to the ends of rail elements, a total of 8 of the above described splice bolts and nuts are to be used.

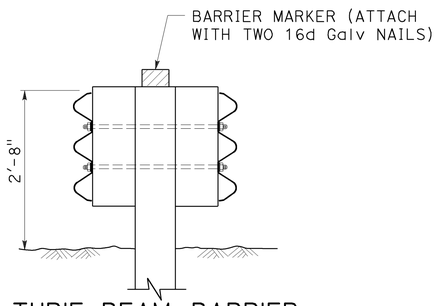

THRIE BEAM BARRIER DELINEATION

See Note 8

NOTES:

1. For details of steel post thrie beam barrier, see Standard Plan A78B.
2. For details of standard hardware, posts and blocks used to construct thrie beam barrier, see Standard Plan A78C1 and Revised Standard Plan RSP A78C2.
3. Thrie beam barrier post spacing to be 6'-3" center to center, except as otherwise noted.
4. Top of barrier rail to be 2'-8" above ground line or shoulder surfacing under the rail element.
5. For barrier end treatments and barrier connections, see Standard Plans A78E3 and A78G, and Revised Standard Plans RSP A78E1, RSP A78E2 RSP A77Q1, RSP A77Q2 and RSP A78H.
6. For connection to Concrete Barrier (Type 60), see Standard Plans A78I.
7. For details of thrie beam barrier on bridge see Standard Plan A78D2. For details of thrie beam barrier at fixed object, see Revised Standard Plan RSP A78D1.
8. See Project Plans for barrier delineation locations. Spacing of barrier markers to match spacing of raised pavement markers on adjacent median edgeline pavement delineation.
9. Install posts in soil.

STATE OF CALIFORNIA
DEPARTMENT OF TRANSPORTATION

THRIE BEAM BARRIER STANDARD BARRIER RAILING SECTION (WOOD POST WITH WOOD BLOCK)

NO SCALE

RSP A78A DATED OCTOBER 30, 2015 SUPERSEDES RSP A78A DATED JULY 19, 2013 AND STANDARD PLAN A78A DATED MAY 20, 2011 - PAGE 89 OF THE STANDARD PLANS BOOK DATED 2010.

REVISED STANDARD PLAN RSP A78A

2010 REVISED STANDARD PLAN RSP A78A

9-28-15

Dist	COUNTY	ROUTE	POST MILES TOTAL PROJECT	SHEET No.	TOTAL SHEETS
04	SM	82, 92	10.4/10.7, R11.0/R11.4	276	370

Randell D. Hiatt
REGISTERED CIVIL ENGINEER

July 19, 2013
PLANS APPROVAL DATE

REGISTERED PROFESSIONAL ENGINEER
Randell D. Hiatt
No. C50200
Exp. 6-30-15
CIVIL
STATE OF CALIFORNIA

THE STATE OF CALIFORNIA OR ITS OFFICERS OR AGENTS SHALL NOT BE RESPONSIBLE FOR THE ACCURACY OR COMPLETENESS OF SCANNED COPIES OF THIS PLAN SHEET.

TO ACCOMPANY PLANS DATED 6-28-16

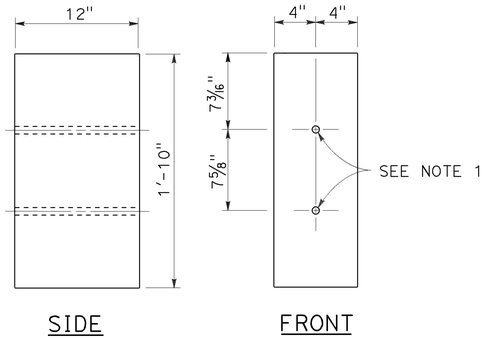

8" x 12"
WOOD BLOCK

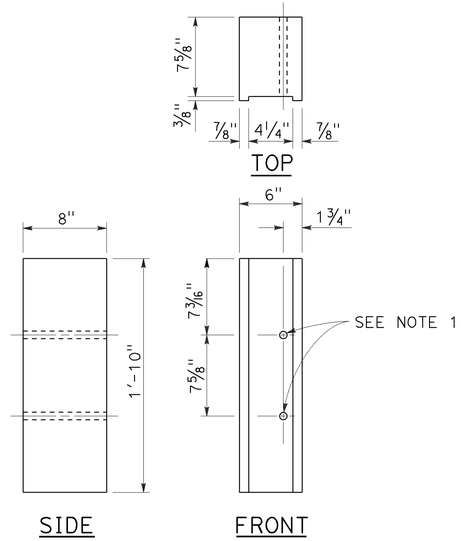

6" x 8"
NOTCHED WOOD BLOCK
See Notes 3 and 5

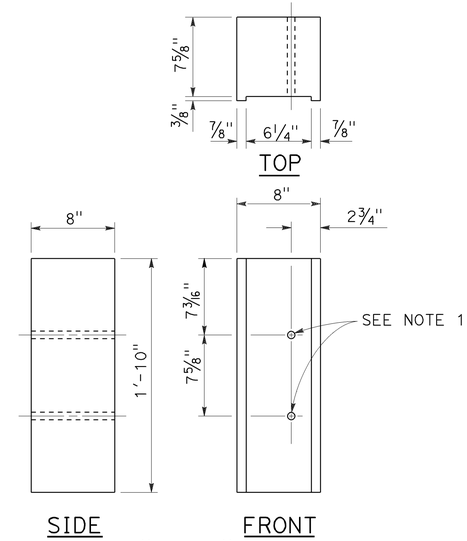

8" x 8"
NOTCHED WOOD BLOCK
See Notes 4 and 5

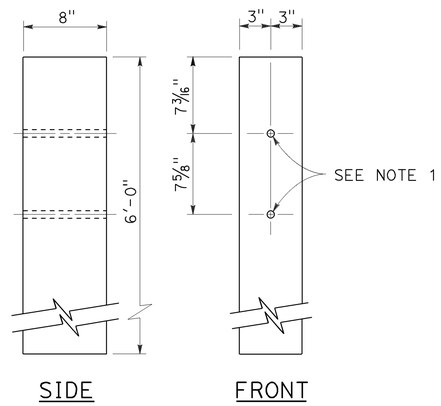

6" x 8"
WOOD POST

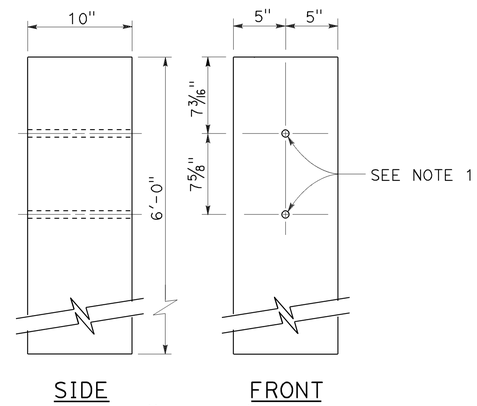

10" x 10"
WOOD POST

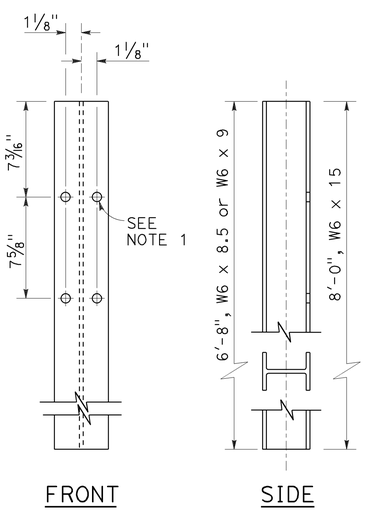

STEEL POST
W6 x 9 or W6 x 8.5 and W6 x 15

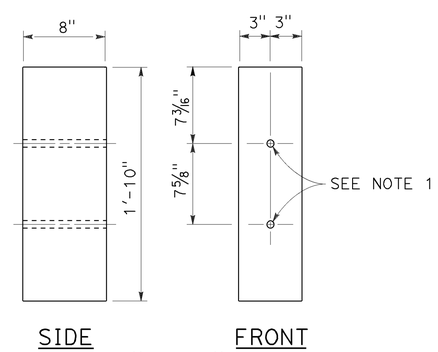

6" x 8"
WOOD BLOCK

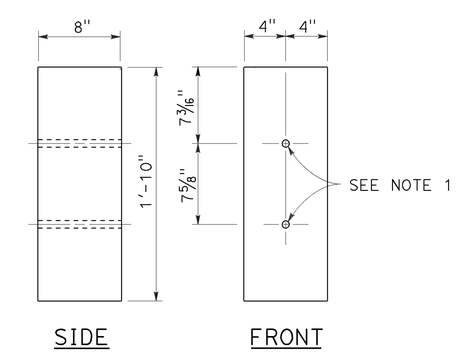

8" x 8"
WOOD BLOCK

NOTES:

1. All holes in steel post to be 13/16" Dia maximum. Holes in wood posts and wood blocks to be 3/4" Dia ±1/16".
2. Dimensions shown for wood post are nominal.
3. For use with W6 x 8.5 or W6 x 9 steel post.
4. For use with W6 x 15 steel post.
5. Notched face of block faces steel post.

STATE OF CALIFORNIA
DEPARTMENT OF TRANSPORTATION

THRIE BEAM BARRIER POST AND BLOCK DETAILS

NO SCALE

RSP A78C2 DATED JULY 19, 2013 SUPERSEDES STANDARD PLAN A78C2 DATED MAY 20, 2011 - PAGE 92 OF THE STANDARD PLANS BOOK DATED 2010.

REVISED STANDARD PLAN RSP A78C2

2010 REVISED STANDARD PLAN RSP A78C2

7-3-13

Dist	COUNTY	ROUTE	POST MILES TOTAL PROJECT	SHEET No.	TOTAL SHEETS
04	SM	82, 92	10.4/10.7, R11.0/R11.4	277	370

REGISTERED CIVIL ENGINEER

July 18, 2014
PLANS APPROVAL DATE

REGISTERED PROFESSIONAL ENGINEER Glenn DeCou No. C34547 Exp. 9-30-15 CIVIL STATE OF CALIFORNIA

THE STATE OF CALIFORNIA OR ITS OFFICERS OR AGENTS SHALL NOT BE RESPONSIBLE FOR THE ACCURACY OR COMPLETENESS OF SCANNED COPIES OF THIS PLAN SHEET.

TO ACCOMPANY PLANS DATED 6-28-16

2010 REVISED STANDARD PLAN RSP A85

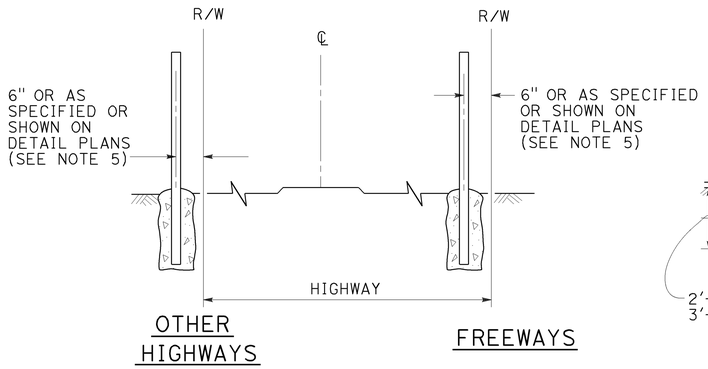

FENCE LOCATION

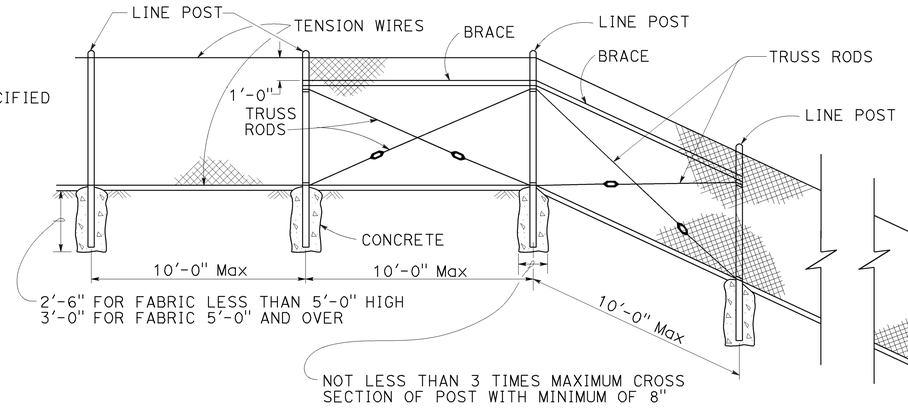

CHAIN LINK FENCE ON SHARP BREAK IN GRADE

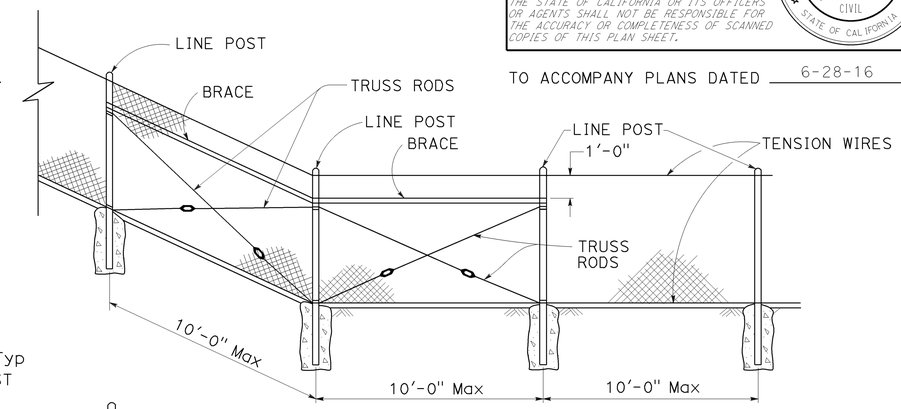

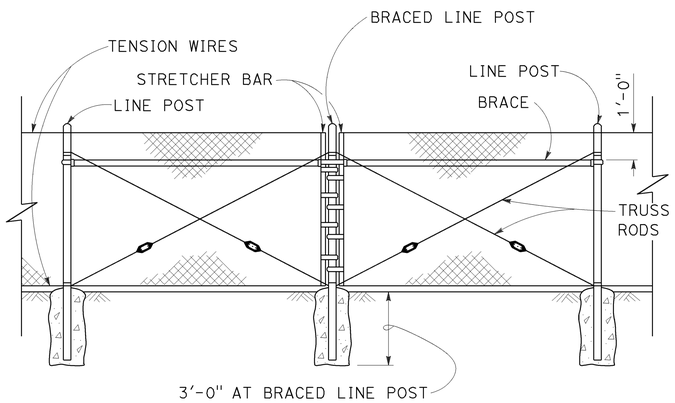

BRACED LINE POST INSTALLATION

Braced line post at intervals not exceeding 1000'

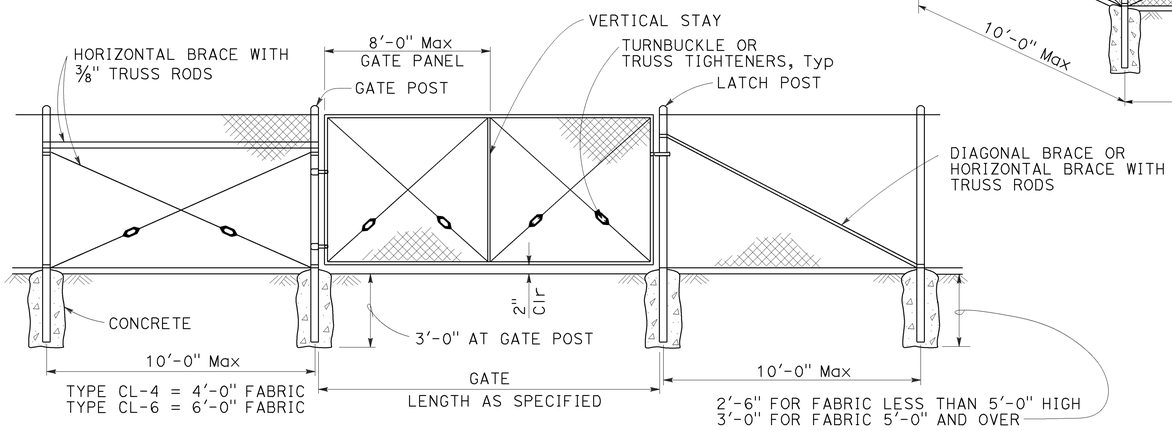

CHAIN LINK GATE INSTALLATION

GATE POST			
FENCE HEIGHT	GATE WIDTHS	ROUND OD PIPE	WEIGHT (lb/ft)
6'-0" AND LESS	UP THRU 6'-0"	2.875"	5.80
	OVER 6'-0" THRU 12'-0"	4.500"	10.80
	OVER 12'-0" THRU 18'-0"	5.563"	14.63
	OVER 18'-0" TO 24'-0" Max	6.625"	18.99
OVER 6'-0" TO 8'-0" Max	UP THRU 6'-0"	3.500"	7.58
	OVER 6'-0" THRU 12'-0"	5.563"	14.63
	OVER 12'-0" THRU 18'-0"	6.625"	18.99
	OVER 18'-0" TO 24'-0" Max	8.625"	28.58

Above post dimensions and weights are minimums. Larger sizes may be used upon approval.

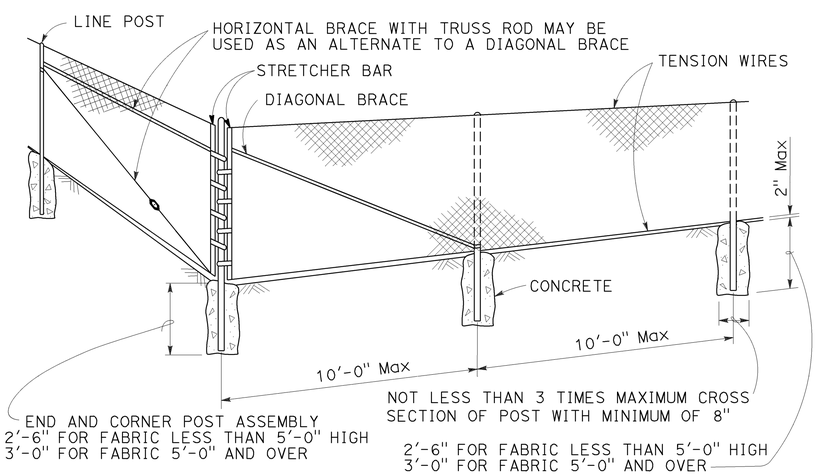

CORNER POST

NOTES:

1. The table below shows minimum sized posts and braces complying with the specifications. Larger or heavier post and brace sizes may be used upon approval.
2. Sections shown in the tables must also comply with the strength requirements and other provisions of the Specifications.
3. Other sections which comply with the strength requirements and other provisions of the Specifications may be used upon approval.
4. Options exercised shall be uniform on any one project.
5. Offset to be 2'-0" at monument locations, measured at right angles to R/W lines. Taper to achieve offset to be at least 20'-0" long.
6. See Revised Standard Plan RSP A85B for Brace, Stretcher Bar, and Truss Tightener Details.

TYPICAL MEMBER DIMENSIONS (See Notes)										
FENCE HEIGHT	LINE POSTS				END, LATCH AND CORNER POSTS		BRACES			
	ROUND OD PIPE	WEIGHT (lb/ft)	ROLL FORMED SECTION	ROLL FORMED WEIGHT (lb/ft)	ROUND OD PIPE	WEIGHT (lb/ft)	ROUND OD PIPE	WEIGHT (lb/ft)	ROLL FORMED SECTION	ROLL FORMED WEIGHT (lb/ft)
6'-0" AND LESS	1.900"	2.72	1.875" x 1.625"	1.85	2.375"	3.65	1.66"	2.27	1.625" x 1.25"	1.35
OVER 6'-0" TO 8'-0" Max	2.375"	3.65	2.25" x 1.70"	2.78	2.875"	5.80	1.66"	2.27	1.625" x 1.25"	1.35

STATE OF CALIFORNIA
DEPARTMENT OF TRANSPORTATION

CHAIN LINK FENCE

NO SCALE

RSP A85 DATED JULY 18, 2014 SUPERSEDES STANDARD PLAN A85 DATED MAY 20, 2011 - PAGE 112 OF THE STANDARD PLANS BOOK DATED 2010.

REVISED STANDARD PLAN RSP A85

7-1-14

Dist	COUNTY	ROUTE	POST MILES TOTAL PROJECT	SHEET No.	TOTAL SHEETS
04	SM	82, 92	10.4/10.7, R11.0/R11.4	278	370

Glenn DeCou
REGISTERED CIVIL ENGINEER

October 19, 2012
PLANS APPROVAL DATE

REGISTERED PROFESSIONAL ENGINEER
Glenn DeCou
No. C34547
Exp. 9-30-13
CIVIL
STATE OF CALIFORNIA

THE STATE OF CALIFORNIA OR ITS OFFICERS OR AGENTS SHALL NOT BE RESPONSIBLE FOR THE ACCURACY OR COMPLETENESS OF SCANNED COPIES OF THIS PLAN SHEET.

TO ACCOMPANY PLANS DATED 6-28-16

2010 REVISED STANDARD PLAN RSP A85B

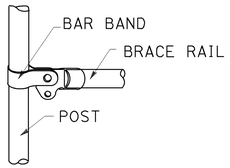

BRACE RAIL

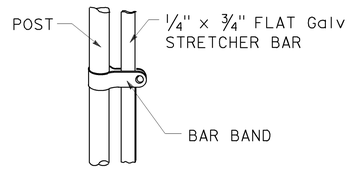

STRETCHER BAR

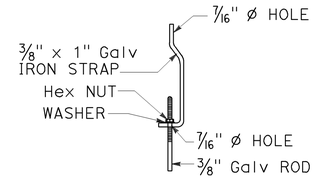

TRUSS TIGHTENER

NOTES:

1. All material for abutment connection to be galvanized.
2. The chain link fabric shall be replaced by barbed wire strands at 12" maximum centers between the double posts.
3. When the width of the culvert makes it necessary to anchor a post to the top of the culvert, a cast iron shoe or other device approved by the Engineer shall be used.
4. Fencing over stream and around headwall may also use Barbed Wire or Wire Mesh fencing with either wood post or steel post installation.
5. See Standard Plan A85 for Chain Link fence dimensions. See Standard Plan A86 for Barbed Wire and Wire Mesh fence dimensions and for wood post and steel post installation.

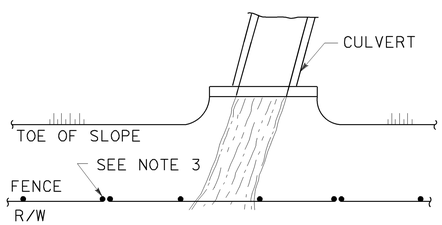

PLAN

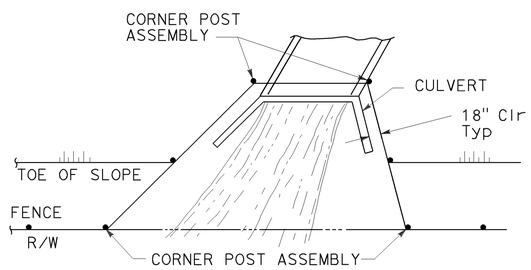

PLAN

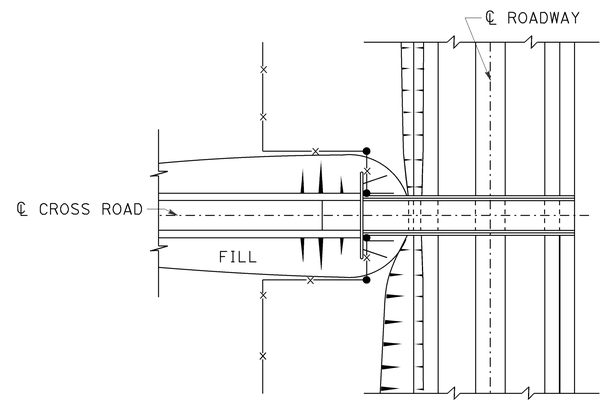

PLAN OF ROADWAY - OVERCROSSING

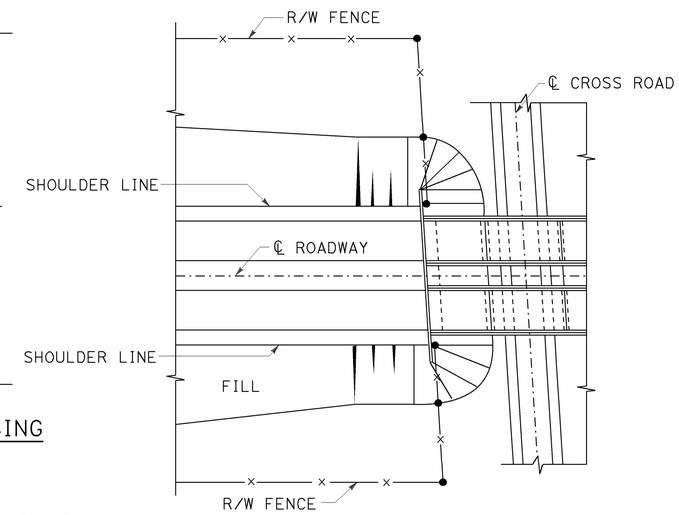

PLAN OF ROADWAY - UNDERCROSSING

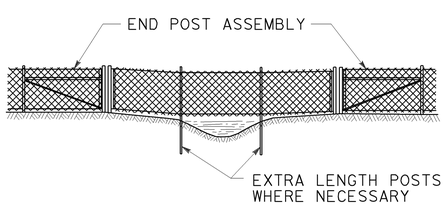

ELEVATION

INSTALLATION OVER STREAM

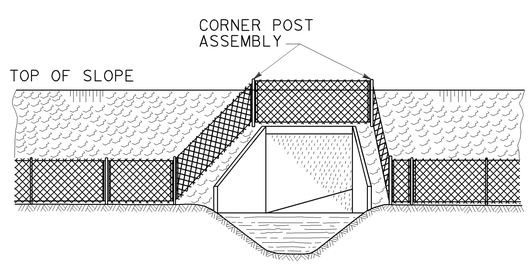

ELEVATION

INSTALLATION AROUND HEADWALL

See Note 4

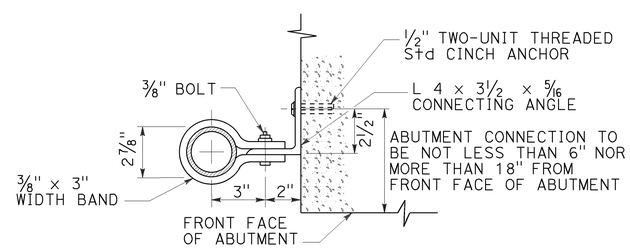

ABUTMENT CONNECTION

TYPICAL INSTALLATION AT BRIDGES

STATE OF CALIFORNIA
DEPARTMENT OF TRANSPORTATION

CHAIN LINK FENCE DETAILS

NO SCALE

RSP A85B DATED OCTOBER 19, 2012 SUPERSEDES STANDARD PLAN A85B DATED MAY 20, 2011 - PAGE 114 OF THE STANDARD PLANS BOOK DATED 2010.

REVISED STANDARD PLAN RSP A85B

7-19-12

Dist	COUNTY	ROUTE	POST MILES TOTAL PROJECT	SHEET No.	TOTAL SHEETS
04	SM	82, 92	10.4/10.7, R11.0/R11.4	279	370

REGISTERED CIVIL ENGINEER

July 19, 2013
PLANS APPROVAL DATE

REGISTERED PROFESSIONAL ENGINEER
Michael Janzen
No. 44788
Exp. 03-31-14
CIVIL
STATE OF CALIFORNIA

THE STATE OF CALIFORNIA OR ITS OFFICERS OR AGENTS SHALL NOT BE RESPONSIBLE FOR THE ACCURACY OR COMPLETENESS OF SCANNED COPIES OF THIS PLAN SHEET.

TO ACCOMPANY PLANS DATED 6-28-16

2010 REVISED STANDARD PLAN RSP A87A

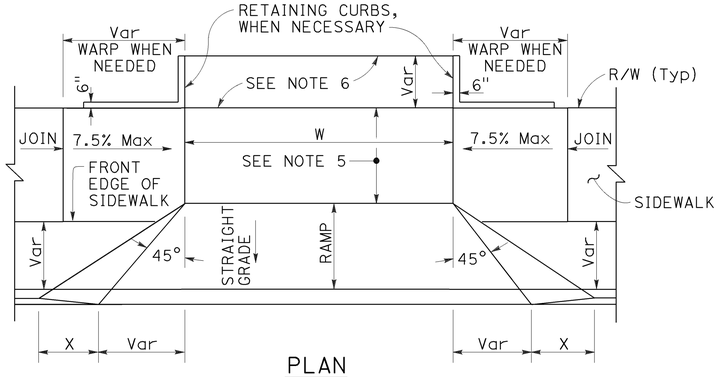

PLAN

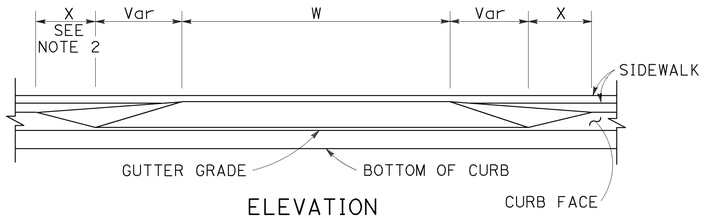

ELEVATION

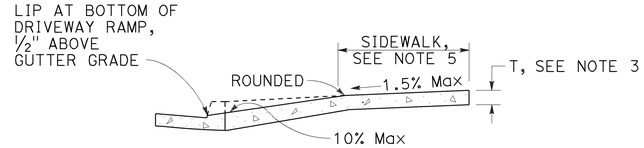

CASE A

Typical driveway, sidewalk not depressed

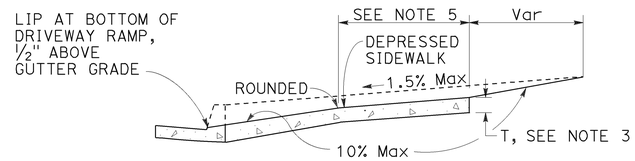

CASE B

Driveway with depressed sidewalk

SECTIONS

DRIVEWAYS

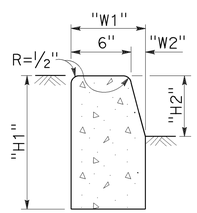

TYPE A1 CURBS

See Table A

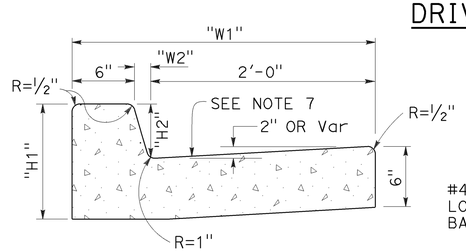

TYPE A2 CURBS

See Table A

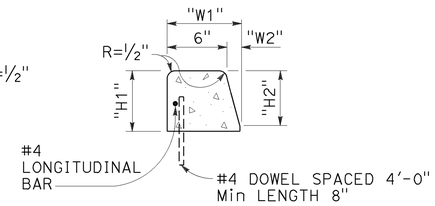

TYPE A3 CURBS

Superimposed on existing pavement
See Table A

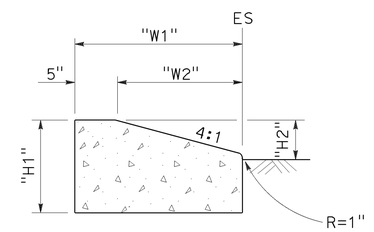

TYPE D CURBS

See Table A

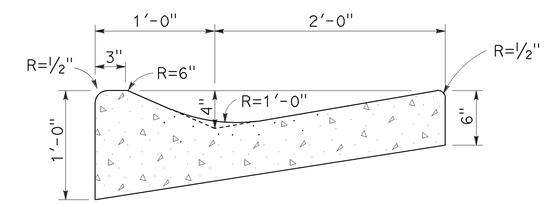

TYPE E CURB

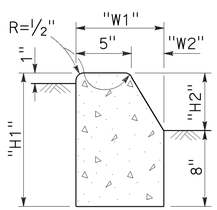

TYPE B1 CURBS

See Table A

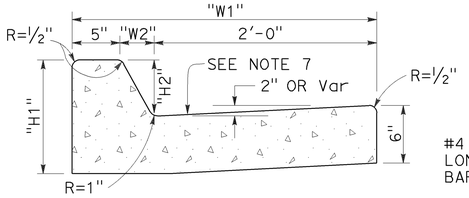

TYPE B2 CURBS

See Table A

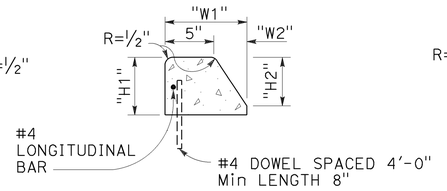

TYPE B3 CURBS

Superimposed on existing pavement
See Table A

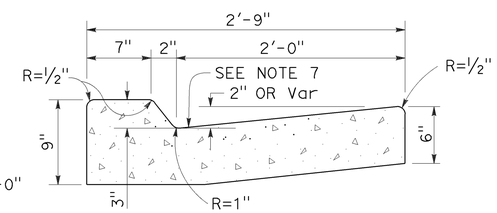

TYPE B4 CURBS

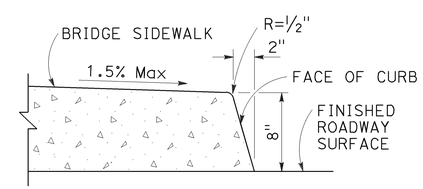

TYPE H CURB

On Bridges

CURBS

TABLE A

CURB TYPE	DIMENSIONS			
	"H1"	"H2"	"W1"	"W2"
A1-6	1'-2"	6"	7½"	1½"
A1-8	1'-4"	8"	8"	2"
A2-6	1'-0"	6"	2'-7½"	1½"
A2-8	1'-2"	8"	2'-8"	2"
A3-6	6"	5"	7¼"	1¼"
A3-8	8"	7"	7¾"	1¾"
B1-4	1'-0"	4"	7½"	2½"
B1-6	1'-2"	6"	9"	4"
B2-4	10"	4"	2'-7½"	2½"
B2-6	1'-0"	6"	2'-9"	4"
B3-4	4"	3"	7"	2"
B3-6	6"	5"	8½"	3½"
D-4	10"	4"	1'-6"	1'-1"
D-6	1'-0"	6"	2'-2"	1'-9"

CURB QUANTITIES

TYPE	CUBIC YARDS PER LINEAR FOOT
A1-6	0.02585
A1-8	0.03084
A2-6	0.05903
A2-8	0.06379
A3-6	0.01036
A3-8	0.01435
B1-4	0.02185
B1-6	0.02930
B2-4	0.05515
B2-6	0.06171
B3-4	0.00641
B3-6	0.01074
B4	0.05709
D-4	0.04083
D-6	0.06804
E	0.06661

NOTES:

1. Case A driveway section typically applies.
2. X=3'-0" except for curb heights over 10" where 4:1 slopes shall be used on curb slope.
3. Sidewalk and ramp thickness "T" at driveway shall be 4" for residental and 6" for commercial.
4. Difference in slope of the driveway ramp and the slope of a line between the gutter and a point on the roadway 5'-0" from gutter line shall not exceed 15%. Reduce driveway ramp slope, not gutter slope, where required.
5. Minimum width of clear passageway for sidewalk shall be 4'-2".
6. Retaining curbs and acquisition of construction easement may be necessary for narrow sidewalks or curb heights in excess of 6".
7. Across the pedestrian route at curb ramp locations, the gutter pan slope shall not exceed 1" of depth for each 2'-0" of width.

STATE OF CALIFORNIA
DEPARTMENT OF TRANSPORTATION

CURBS AND DRIVEWAYS

NO SCALE

RSP A87A DATED JULY 19, 2013 SUPERSEDES STANDARD PLAN A87A
DATED MAY 20, 2011 - PAGE 119 OF THE STANDARD PLANS BOOK DATED 2010.

REVISED STANDARD PLAN RSP A87A

7-8-13

Dist	COUNTY	ROUTE	POST MILES TOTAL PROJECT	SHEET No.	TOTAL SHEETS
04	SM	82, 92	10.4/10.7, R11.0/R11.4	280	370

REGISTERED CIVIL ENGINEER

January 15, 2016
PLANS APPROVAL DATE

REGISTERED PROFESSIONAL ENGINEER
Michael Janzen
No. 44788
Exp. 3-31-16
CIVIL
STATE OF CALIFORNIA

THE STATE OF CALIFORNIA OR ITS OFFICERS OR AGENTS SHALL NOT BE RESPONSIBLE FOR THE ACCURACY OR COMPLETENESS OF SCANNED COPIES OF THIS PLAN SHEET.

TO ACCOMPANY PLANS DATED 6-28-16

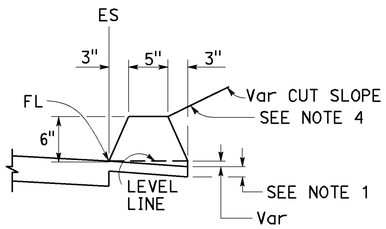

TYPE A
See Notes 3 and 5

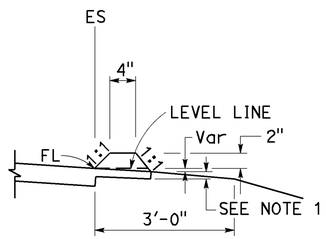

TYPE C

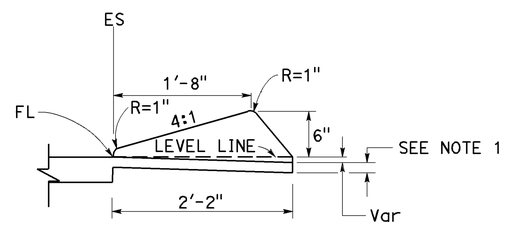

TYPE D

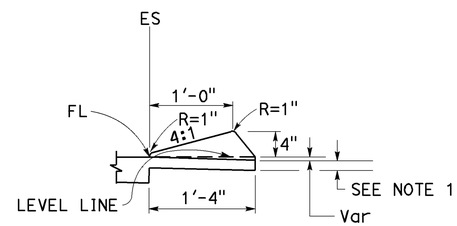

TYPE E

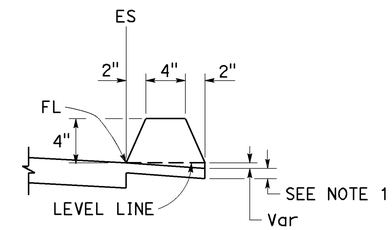

TYPE F
See Note 5

DIKES

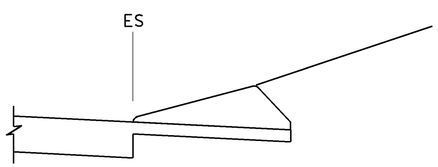

CASE C-1
Cut Slope

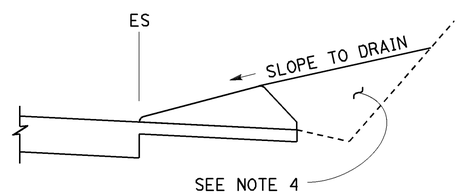

CASE C-2
Cut Slope

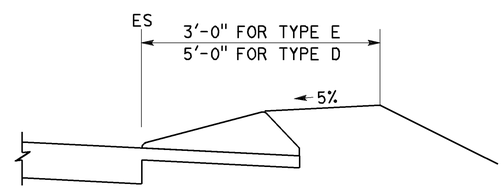

CASE F

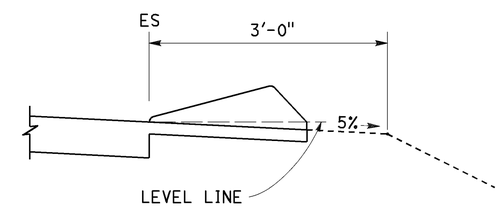

CASE R
See Note 2

TYPE D AND E BACKFILL DETAILS

NOTES:

1. For HMA shoulders only, extend top layer of HMA placed on the shoulder under dike with no joint at the ES. For projects with OGFC shoulders, do not extend OGFC under dike. See project plans for modified dike detail.
2. Case R applies to retrofit only projects where restrictive conditions do not provide enough width for Case F backfill.
3. Type A dike only to be used where restrictive slope conditions do not provide enough width to use Type D or Type E dike.
4. Fill and compact with excavated material to top of dike.
5. Use Type A or F dike, where dike is required with guardrail installations. See Revised Standard Plan RSP A77N4 for dike positioning details. See Revised Standard Plan RSP A77N3 for hinge point offsets with guardrail.

DIKE QUANTITIES

TYPE	CUBIC YARDS PER LINEAR FOOT
A	0.0135
C	0.0038
D	0.0293
E	0.0130
F	0.0066

Quantities based on 5% cross slope.

STATE OF CALIFORNIA
DEPARTMENT OF TRANSPORTATION

HOT MIX ASPHALT DIKES

NO SCALE

RSP A87B DATED JANUARY 15, 2016 SUPERSEDES RSP A87B DATED JULY 19, 2013 AND STANDARD PLAN A87B DATED MAY 20, 2011 - PAGE 120 OF THE STANDARD PLANS BOOK DATED 2010.

REVISED STANDARD PLAN RSP A87B

2010 REVISED STANDARD PLAN RSP A87B

11-17-15

Dist	COUNTY	ROUTE	POST MILES TOTAL PROJECT	SHEET No.	TOTAL SHEETS
04	SM	82, 92	10.4/10.7, R11.0/R11.4	281	370

REGISTERED CIVIL ENGINEER

July 3, 2015
PLANS APPROVAL DATE

REGISTERED PROFESSIONAL ENGINEER Hector David Cordova No. C41957 Exp. 3-31-16 CIVIL STATE OF CALIFORNIA

THE STATE OF CALIFORNIA OR ITS OFFICERS OR AGENTS SHALL NOT BE RESPONSIBLE FOR THE ACCURACY OR COMPLETENESS OF SCANNED COPIES OF THIS PLAN SHEET.

TO ACCOMPANY PLANS DATED 6-28-16

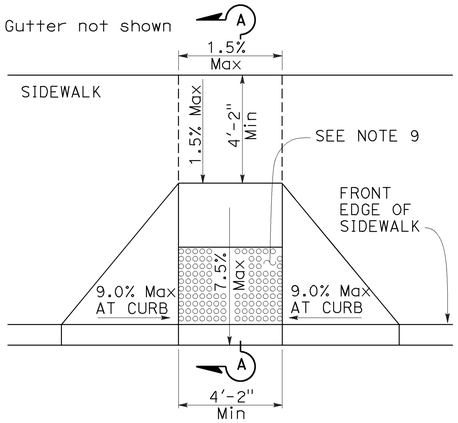

CASE A

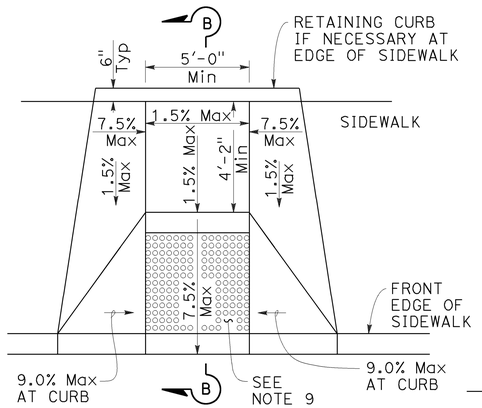

CASE B

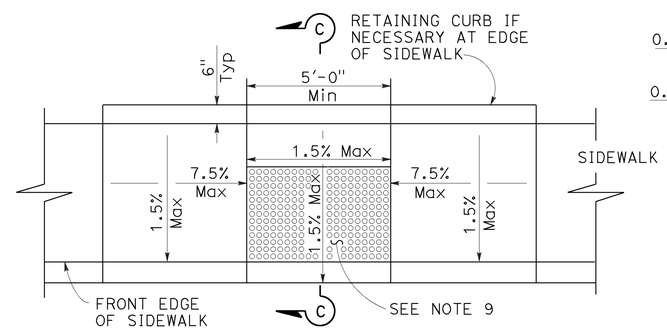

CASE C

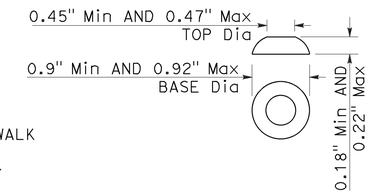

RAISED TRUNCATED DOME

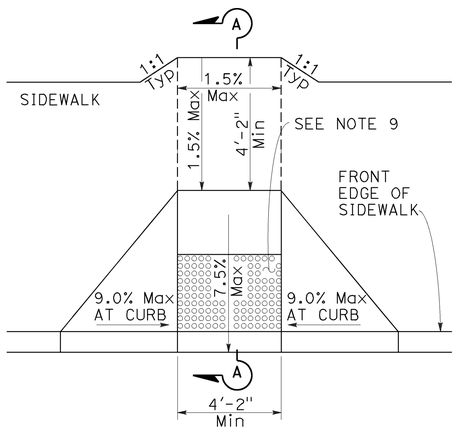

CASE D

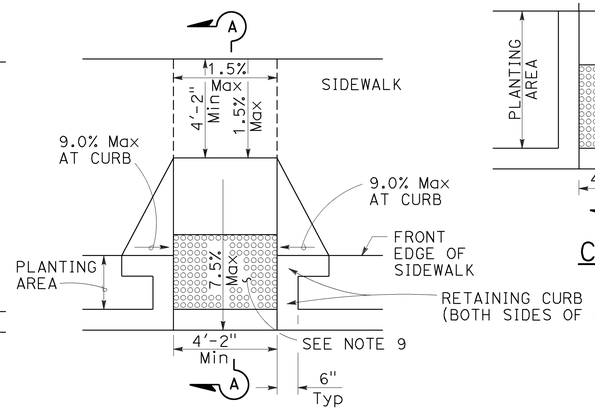

CASE E

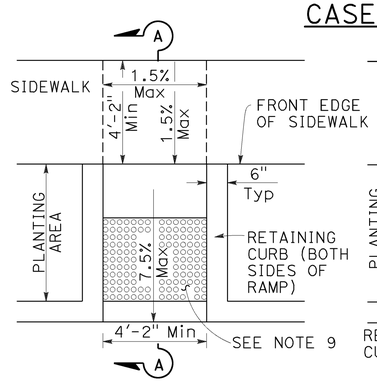

CASE F

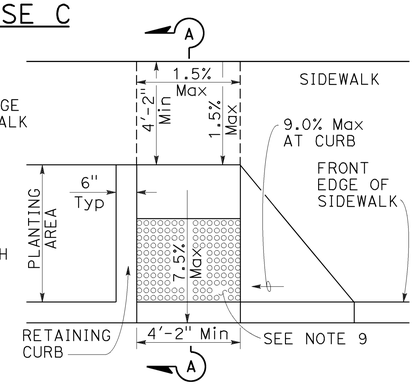

CASE G
See Note 4

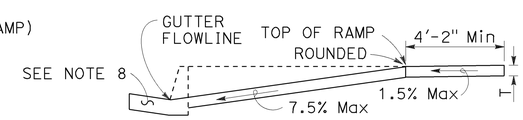

SECTION A-A

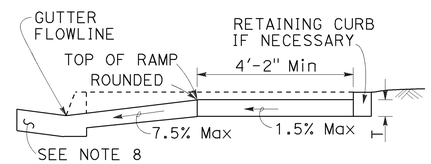

SECTION B-B
Depress entire sidewalk as required

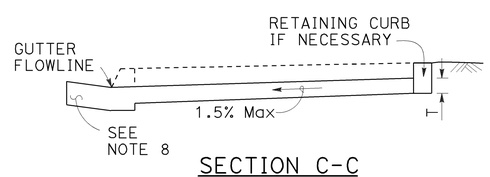

SECTION C-C

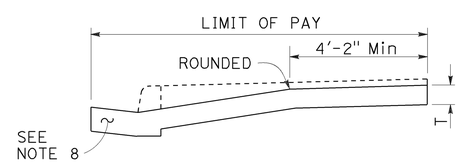

RETROFIT PAY LIMITS
Existing curb and sidewalk

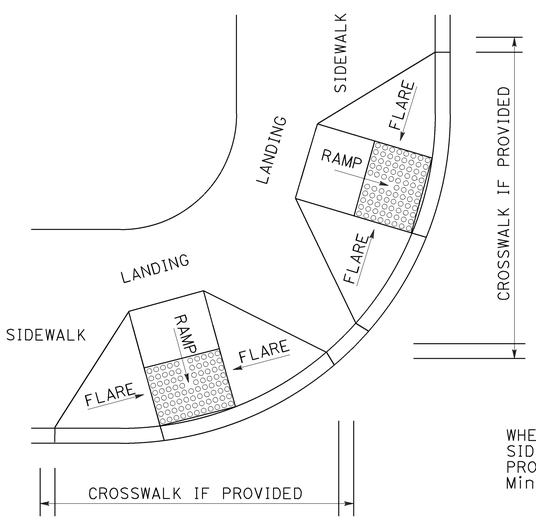

DETAIL A
TYPICAL TWO-RAMP CORNER INSTALLATION
See Note 1

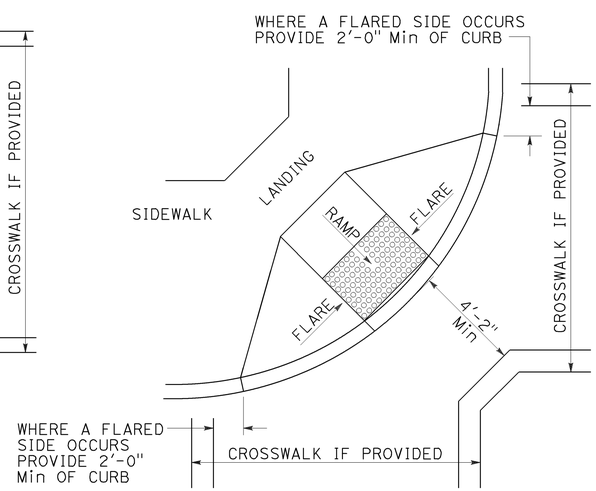

DETAIL B
TYPICAL ONE-RAMP CORNER INSTALLATION
See Notes 1 and 3

NOTES:

1. As site conditions dictate, Case A through Case G curb ramps may be used for corner installations similar to those shown in Detail A and Detail B. The case of curb ramps used in Detail A do not have to be the same. Case A through Case G curb ramps also may be used at mid block locations, as site conditions dictate.
2. If distance from curb to back of sidewalk is too short to accommodate ramp and 4'-2" platform (landing) as shown in Case A, the sidewalk may be depressed longitudinally as in Case B, or C or may be widened as in Case D.
3. When ramp is located in center of curb return, crosswalk configuration must be similar to that shown for Detail B.
4. As site conditions dictate, the retaining curb side and the flared side of the Case G ramp shall be constructed in reversed position.
5. If located on a curve, the sides of the ramp need not be parallel, but the minimum width of the ramp shall be 4'-2".
6. Side slope of ramp flares vary uniformly from a maximum of 9.0% at curb to conform with longitudinal sidewalk slope adjacent to top of the ramp, except in Case C and Case F.
7. Transitions from ramps and landing to walks, gutters or streets shall be flush (no lip) and free of abrupt changes.
8. Counter slopes of adjoining gutters and road surfaces immediately adjacent to and within 24 inches of the curb ramp shall not be steeper than 1:20 (5.0%). Gutter pan slope shall not exceed 1" of depth for each 2'-0" of width.
9. Curb ramps shall have a detectable warning surface that extends the full width and 3'-0" depth of the ramp. A 4'-0" wide detectable warning surface may be used on a 4'-2" wide curb ramp. Detectable Warning Surfaces shall conform to the requirements in the Standard Specifications.
10. Sidewalk and ramp thickness, "T", shall be 3½" minimum.
11. Utility pull boxes, manholes, vaults and all other utility facilities within the boundaries of the curb ramp will be relocated or adjusted to grade by the owner prior to, or in conjunction with, curb ramp construction.
12. Detectable warning surface may have to be cut to allow removal of utility covers while maintaining full detectable warning width and depth.

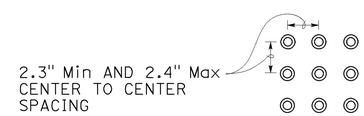

RAISED TRUNCATED DOME PATTERN (IN-LINE)
DETECTABLE WARNING SURFACE
See Note 9

STATE OF CALIFORNIA
DEPARTMENT OF TRANSPORTATION

CURB RAMP DETAILS

NO SCALE

RSP A88A DATED JULY 3, 2015 SUPERSEDES RSP A88A DATED MARCH 21, 2014 AND RSP A88A DATED JULY 19, 2013 AND STANDARD PLAN A88A DATED MAY 20, 2011 - PAGE 121 OF THE STANDARD PLANS BOOK DATED 2010.

REVISED STANDARD PLAN RSP A88A

2010 REVISED STANDARD PLAN RSP A88A

6-30-15

Dist	COUNTY	ROUTE	POST MILES TOTAL PROJECT	SHEET No.	TOTAL SHEETS
04	SM	82, 92	10.4/10.7, R11.0/R11.4	282	370

William K. Farnbach
REGISTERED CIVIL ENGINEER

July 19, 2013
PLANS APPROVAL DATE

REGISTERED PROFESSIONAL ENGINEER William K. Farnbach No. C49042 Exp. 9-30-14 CIVIL STATE OF CALIFORNIA

THE STATE OF CALIFORNIA OR ITS OFFICERS OR AGENTS SHALL NOT BE RESPONSIBLE FOR THE ACCURACY OR COMPLETENESS OF SCANNED COPIES OF THIS PLAN SHEET.

TO ACCOMPANY PLANS DATED 6-28-16

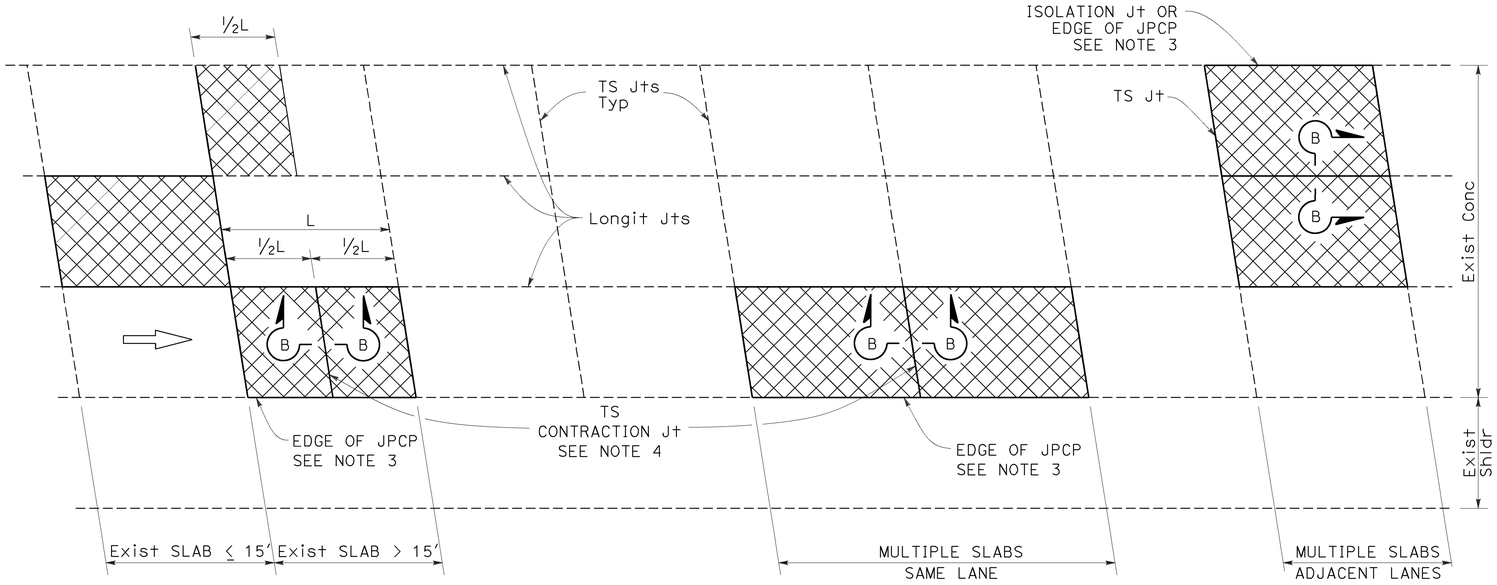

PLAN

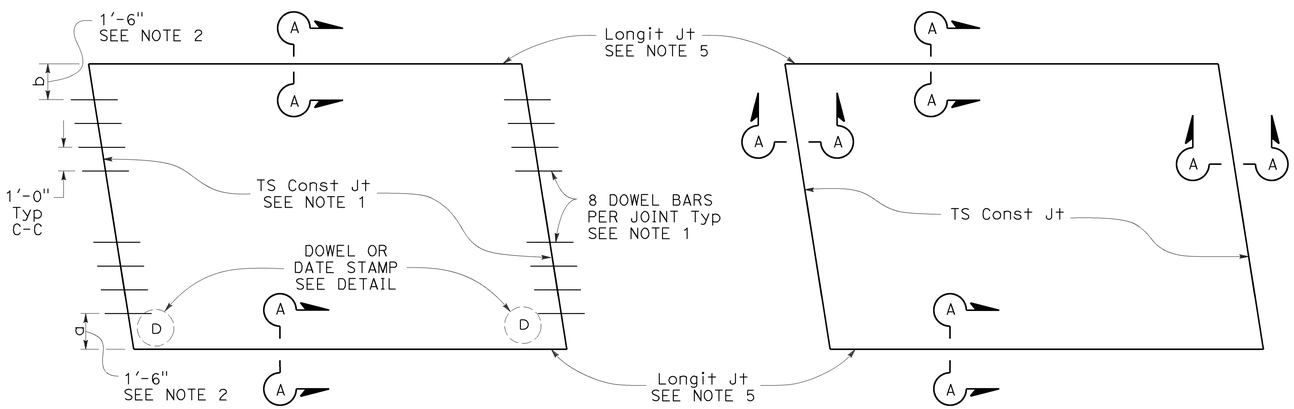

TYPE I
See Design Note 1

TYPE II
See Design Note 2

SLAB LAYOUT

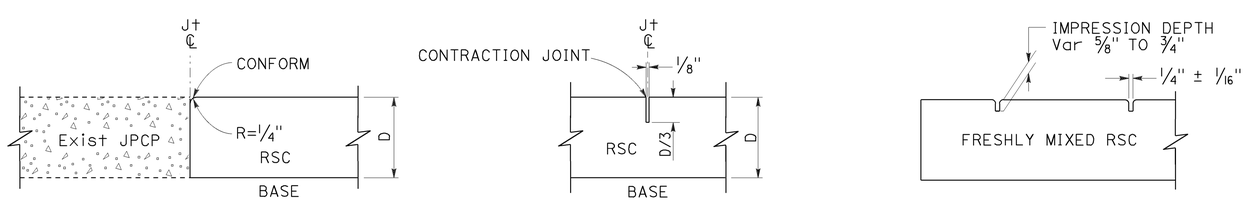

SECTION A-A

SECTION B-B

SECTION C-C

LEGEND:

RSC RAPID STRENGTH CONCRETE

INDIVIDUAL SLAB REPLACEMENT WITH RSC

NOTES:

1. For details not shown, see Revised Standard Plan RSP P10.
2. Where the existing outside shoulder is asphalt concrete pavement, "a" = 1'-0" and "b" = 2'-0".
3. Use side forms where edge of RSC pavement is adjacent to asphalt concrete.
4. Transverse contraction joint to match skew of existing joint. Omit dowel bars.
5. Do not place tie bars at longitudinal joints.

DESIGN NOTES:

1. For concrete slab repair with at least 5 years design life.
2. For short term repairs < 5 yrs design life or for slab replacements with cracking and seating.

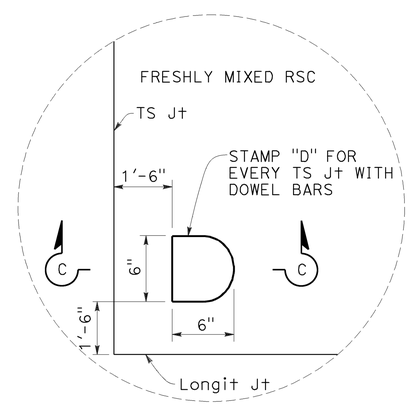

DOWEL STAMP DETAIL

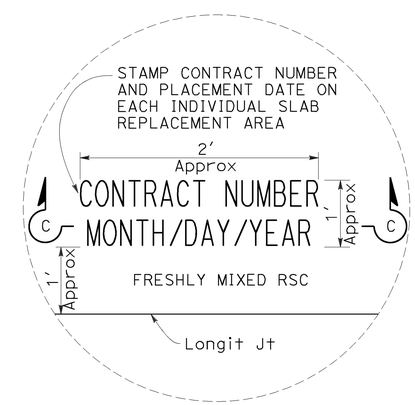

DATE STAMP DETAIL

STATE OF CALIFORNIA
DEPARTMENT OF TRANSPORTATION

INDIVIDUAL SLAB REPLACEMENT WITH RAPID STRENGTH CONCRETE

NO SCALE

RSP P8 DATED JULY 19, 2013 SUPERSEDES RSP P8 DATED APRIL 20, 2012 AND STANDARD PLAN P8 DATED MAY 20, 2011 - PAGE 130 OF THE STANDARD PLANS BOOK DATED 2010.

REVISED STANDARD PLAN RSP P8

2010 REVISED STANDARD PLAN RSP P8

5-31-13

Dist	COUNTY	ROUTE	POST MILES TOTAL PROJECT	SHEET No.	TOTAL SHEETS
04	SM	82, 92	10.4/10.7, R11.0/R11.4	283	370

Gregory A. Balzer
LICENSED LANDSCAPE ARCHITECT

July 19, 2013
PLANS APPROVAL DATE

THE STATE OF CALIFORNIA OR ITS OFFICERS OR AGENTS SHALL NOT BE RESPONSIBLE FOR THE ACCURACY OR COMPLETENESS OF SCANNED COPIES OF THIS PLAN SHEET.

LICENSED LANDSCAPE ARCHITECT — Gregory A. Balzer 2576 — 04 Expiration Date 2-28-15 — Renewal Date 7-19-13 — Date — STATE OF CALIFORNIA

TO ACCOMPANY PLANS DATED 6-28-16

A

AB	AGGREGATE BASE
ABS	ACRYLONITRILE-BUTADIENE-STYRENE
AC	ASPHALT CONCRETE
ACC	ARMOR-CLAD CONDUCTORS
Adj	ADJACENT/ADJUSTABLE
AIC	AUXILIARY IRRIGATION CONTROLLER
Alt	ALTERNATIVE
AMEND	AMENDMENT
ARV	AIR RELEASE VALVE
AUTO	AUTOMATIC
AUX	AUXILIARY
AVB	ATMOSPHERIC VACUUM BREAKER

B

B&B	BALLED AND BURLAPPED
B/B	BRASS/BRONZE
B/B/PL	BRASS/BRONZE/PLASTIC
B/PL	BRASS/PLASTIC
BFM	BONDED FIBER MATRIX
Bit Ctd	BITUMINOUS COATED
BP	BOOSTER PUMP
BPA	BACKFLOW PREVENTER ASSEMBLY
BPE	BACKFLOW PREVENTER ENCLOSURE
BV	BALL VALVE

C

C	CONDUIT
CAP	CORRUGATED ALUMINUM PIPE
CARV	COMBINATION AIR RELEASE VALVE
CB	COUPLING BAND
CCA	CAM COUPLER ASSEMBLY
CEC	CONTROLLER ENCLOSURE CABINET
CHDPE	CORRUGATED HIGH DENSITY POLYETHYLENE
CL	CHAIN LINK
CNC	CONTROL AND NEUTRAL CONDUCTORS
Conc	CONCRETE
CP	COPPER PIPE
CS	COMPOST SOCK
CSP	CORRUGATED STEEL PIPE
CST	CENTER STRIP
CV	CHECK VALVE

D

Dia	DIAMETER
DIP	DUCTILE IRON PIPE
DIT	DRIP IRRIGATION TUBING
DG	DECOMPOSED GRANITE
DN	DIAMETER NOMINAL
DVA	DRIP VALVE ASSEMBLY

E

EC	EROSION CONTROL
ECTC	EROSION CONTROL TECHNOLOGY COUNCIL
Elect	ELECTRIC/ELECTRICAL
Elev	ELEVATION
ELL	ELBOW
ENCL	ENCLOSURE
EP	EDGE OF PAVEMENT
ES	EDGE OF SHOULDER
EST	END STRIP
ESTB	ESTABLISHMENT
ETW	EDGE OF TRAVELED WAY

F

F	FULL CIRCLE
F/P	FULL/PART CIRCLE
FCV	FLOW CONTROL VALVE
FERT	FERTILIZER
FG	FINISHED GRADE
FH	FLEXIBLE HOSE
FIPT	FEMALE IRON PIPE THREAD
FIS	FERTILIZER INJECTOR SYSTEM
FL	FLOW LINE
FR	FIBER ROLL
FS	FLOW SENSOR
FSC	FLOW SENSOR CABLE
FV	FLUSH VALVE

G

Galv	GALVANIZED
GARV	GARDEN VALVE
GARVA	GARDEN VALVE ASSEMBLY
GM	GRAVEL MULCH
GPH	GALLONS PER HOUR
GPM	GALLONS PER MINUTE
GSP	GALVANIZED STEEL PIPE
GV	GATE VALVE

H

H	HALF CIRCLE
HDPE	HIGH DENSITY POLYETHYLENE
HP	HORSEPOWER/HINGE POINT
HPL	HIGH PRESSURE LINE
Hwy	HIGHWAY

I

IC	IRRIGATION CONTROLLER
ICC	IRRIGATION CONTROLLER(S) IN CONTROLLER ENCLOSURE CABINET
ID	INSIDE DIAMETER
IFS	IRRIGATION FILTRATION SYSTEM
IPS	IRON PIPE SIZE
IPT	IRON PIPE THREAD
Irr	IRRIGATION

L

L	LENGTH

M

Max	MAXIMUM
MBGR	METAL BEAM GUARD RAILING
MCV	MANUAL CONTROL VALVE
MIC	MASTER IRRIGATION CONTROLLER
Min	MINIMUM
MIPT	MALE IRON PIPE THREAD
Misc	MISCELLANEOUS
Mtl	MATERIAL
MVP	MAINTENANCE VEHICLE PULLOUT

N

NCN	NO COMMON NAME
NL	NOZZLE LINE
No.	NUMBER
NPT	NATIONAL PIPE THREAD

O

O/C	ON CENTER
OD	OUTSIDE DIAMETER
OL	OVERLAP

P

P	PART CIRCLE
PB	PULL BOX
PCC	PORTLAND CEMENT CONCRETE
PE	POLYETHYLENE
Pkt	PACKET
PL	PLASTIC
PLS	PURE LIVE SEED
PLT	PLANT/PLANTING
PLT ESTB	PLANT ESTABLISHMENT
PM	POST MILE
PR	PRESSURE RATED
PRLV	PRESSURE RELIEF VALVE
PRV	PRESSURE REGULATING VALVE
PVC	POLYVINYL CHLORIDE
Pvmt	PAVEMENT

Q

Q	QUARTER CIRCLE
QCV	QUICK COUPLING VALVE

R

R	RADIUS
RCP	REINFORCED CONCRETE PIPE
RCV	REMOTE CONTROL VALVE
RCVM	REMOTE CONTROL VALVE (MASTER)
RCVMF	REMOTE CONTROL VALVE (MASTER) W/FLOW SENSOR
RCVP	REMOTE CONTROL VALVE W/PRESSURE REGULATOR
RCW	RECYCLED WATER
RECP	ROLLED EROSION CONTROL PRODUCT
REQ	REQUIRED
RICS	REMOTE IRRIGATION CONTROL SYSTEM
R/W	RIGHT OF WAY

S

S	SLIP
SCH	SCHEDULE
SF	STATE-FURNISHED
Shld	SHOULDER
Sq	SQUARE
SST	SIDE STRIP
Sta	STATION
Std	STANDARD
SW	SIDEWALK/SOUND WALL

T

T	THIRD CIRCLE/THREAD
TLS	TRUCK LOADING STANDPIPE
TQ	THREE QUARTER CIRCLE
TRM	TURF REINFORCEMENT MAT
TT	TWO-THIRDS CIRCLE
TWSA	TREE WELL SPRINKLER ASSEMBLY
Typ	TYPICAL

U

UG	UNDERGROUND

W

W	WIDTH
W/	WITH
WM	WATER METER
WS	WYE STRAINER
WSA	WYE STRAINER ASSEMBLY
WSP	WELDED STEEL PIPE
WWM	WELDED WIRE MESH

NOTE:

For additional abbreviations, see Standard Plans A10A and A10B.

STATE OF CALIFORNIA
DEPARTMENT OF TRANSPORTATION

LANDSCAPE AND EROSION CONTROL ABBREVIATIONS

NO SCALE

RSP H1 DATED JULY 19, 2013 SUPERSEDES STANDARD PLAN H1 DATED MAY 20, 2011 - PAGE 218 OF THE STANDARD PLANS BOOK DATED 2010.

REVISED STANDARD PLAN RSP H1

2010 REVISED STANDARD PLAN RSP H1

Dist	COUNTY	ROUTE	POST MILES TOTAL PROJECT	SHEET No.	TOTAL SHEETS
04	SM	82, 92	10.4/10.7, R11.0/R11.4	284	370

LICENSED LANDSCAPE ARCHITECT

November 15, 2013
PLANS APPROVAL DATE

Gregory A. Balzer 2576 LICENSED LANDSCAPE ARCHITECT STATE OF CALIFORNIA
02-28-15 (Renewal) Date
11-15-13 Date

THE STATE OF CALIFORNIA OR ITS OFFICERS OR AGENTS SHALL NOT BE RESPONSIBLE FOR THE ACCURACY OR COMPLETENESS OF SCANNED COPIES OF THIS PLAN SHEET.

TO ACCOMPANY PLANS DATED 6-28-16

EXISTING	NEW	ITEM DESCRIPTION
		WATER METER (WM)
		BACKFLOW PREVENTER ASSEMBLY (BPA)
		BACKFLOW PREVENTER ENCLOSURE (BPE)
		BOOSTER PUMP (BP)
		TRUCK LOADING STANDPIPE (TLS)
	FS	FLOW SENSOR (FS)
		MASTER IRRIGATION CONTROLLER (MIC)
		AUXILIARY IRRIGATION CONTROLLER (AIC)
		IRRIGATION CONTROLLER (IC) IRRIGATION CONTROLLER (IC) (BATTERY) IRRIGATION CONTROLLER (IC) (SOLAR) IRRIGATION CONTROLLER (IC) (TWO WIRE) IRRIGATION CONTROLLER(S) IN CONTROLLER ENCLOSURE CABINET (ICC)
acc	ACC	ARMOR-CLAD CONDUCTORS (ACC)
cnc	CNC	CONTROL AND NEUTRAL CONDUCTORS (CNC)
		IRRIGATION CONDUIT
		EXTEND IRRIGATION CONDUIT
dip	DIP	DUCTILE IRON PIPE (SUPPLY LINE) (MAIN) (DIP)
		GALVANIZED STEEL PIPE (SUPPLY LINE) (MAIN) (GSP)
		GALVANIZED STEEL PIPE (SUPPLY LINE) (LATERAL) (GSP)
		PLASTIC PIPE (SUPPLY LINE) (MAIN)
		PLASTIC PIPE (SUPPLY LINE) (LATERAL)
cp	CP	COPPER PIPE (SUPPLY LINE)
dit	DIT	DRIP IRRIGATION TUBING
		REMOTE CONTROL VALVE (RCV) REMOTE CONTROL VALVE (MASTER) (RCVM) REMOTE CONTROL VALVE (MASTER) W/FLOW METER (RCVMF)
P	P	REMOTE CONTROL VALVE W/PRESSURE REGULATOR (RCVP)
		EXISTING MANUAL CONTROL VALVE (MCV)
V	V	DRIP VALVE ASSEMBLY (DVA)
Y	Y	WYE STRAINER ASSEMBLY (WSA)

EXISTING	NEW	ITEM DESCRIPTION
		GATE VALVE (GV)
		BALL VALVE (BV)
		QUICK COUPLING VALVE (QCV)
		CAM COUPLER ASSEMBLY (CCA)
		GARDEN VALVE ASSEMBLY (GARVA)
		PRESSURE REGULATING VALVE (PRV)
		PRESSURE RELIEF VALVE (PRLV)
		FLOW CONTROL VALVE (FCV)
		COMBINATION AIR RELEASE VALVE (CARV)
		CHECK VALVE (CV)
		FLUSH VALVE (FV)
		EXISTING NOZZLE LINE W/TURNING UNION
		EXISTING IRRIGATION SYSTEM
		EXISTING IRRIGATION SYSTEM TO BE REMOVED
		CHAIN LINK GATE
		QUICK COUPLING VALVE W/SPRINKLER PROTECTOR
3	3	SPRINKLER W/SPRINKLER PROTECTOR
	C	CONNECT TO EXISTING SYSTEM
		CAP
		CAP EXISTING
	\\\FR\\\	FIBER ROLL
	\\\CS\\\	COMPOST SOCK

RCV SIZE
IRRIGATION CONTROLLER
CONTROLLER STATION
VALVE IN PARALLEL (IF APPLICABLE)
GPM
QUANTITY OF SPRINKLERS (WHEN SHOWN)

* 2½"-A-2b-40-60

VALVE CODE

* VALVE CODES FOR EXISTING VALVES ARE SHOWN IN A DASHED ENCLOSURE.

STATE OF CALIFORNIA
DEPARTMENT OF TRANSPORTATION

LANDSCAPE AND EROSION CONTROL SYMBOLS

NO SCALE

RSP H2 DATED NOVEMBER 15, 2013 SUPERSEDES RSP H2 DATED JULY 19, 2013 AND STANDARD PLAN H2 DATED MAY 20, 2011 - PAGE 219 OF THE STANDARD PLANS BOOK DATED 2010.

REVISED STANDARD PLAN RSP H2

2010 REVISED STANDARD PLAN RSP H2

10-9-13

Dist	COUNTY	ROUTE	POST MILES TOTAL PROJECT	SHEET No.	TOTAL SHEETS
04	SM	82, 92	10.4/10.7, R11.0/R11.4	285	370

LICENSED LANDSCAPE ARCHITECT

July 19, 2013
PLANS APPROVAL DATE

THE STATE OF CALIFORNIA OR ITS OFFICERS OR AGENTS SHALL NOT BE RESPONSIBLE FOR THE ACCURACY OR COMPLETENESS OF SCANNED COPIES OF THIS PLAN SHEET.

LICENSED LANDSCAPE ARCHITECT — Gregory A. Balzer — 2376 — Expiration Date 2-28-15 — Renewal Date 7-19-13 — Date — STATE OF CALIFORNIA

TO ACCOMPANY PLANS DATED 6-28-16

2010 REVISED STANDARD PLAN RSP H7

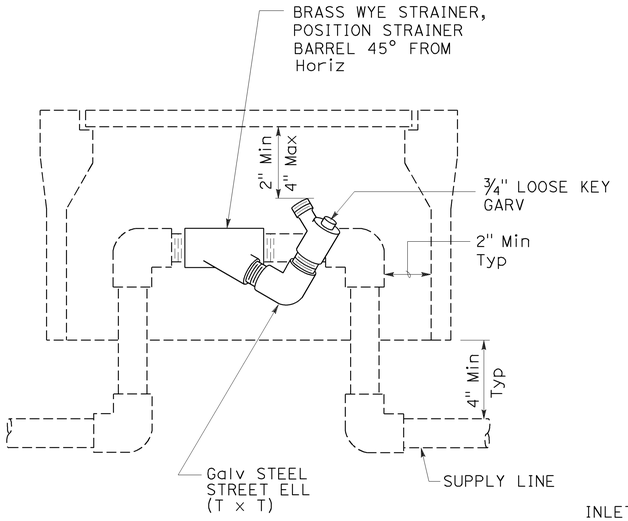

ELEVATION
WYE STRAINER ASSEMBLY

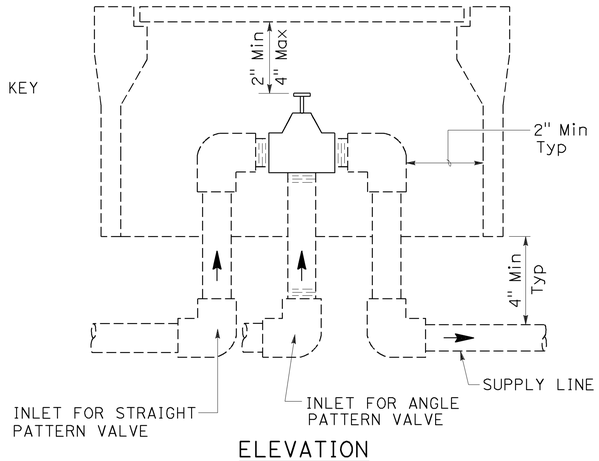

ELEVATION
VALVE

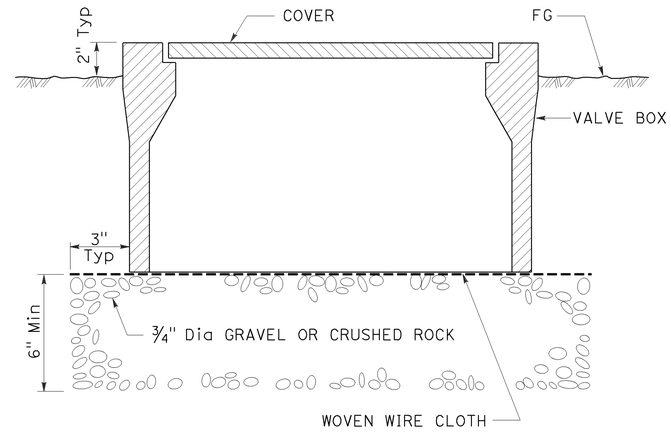

SECTION
VALVE BOX

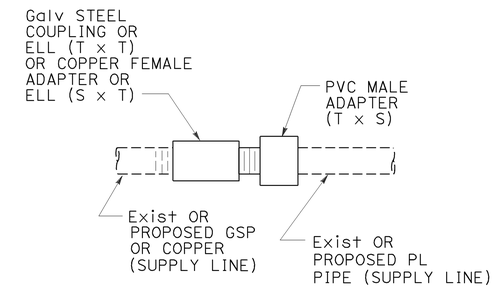

GALVANIZED OR COPPER PIPE CONNECTION TO PLASTIC PIPE

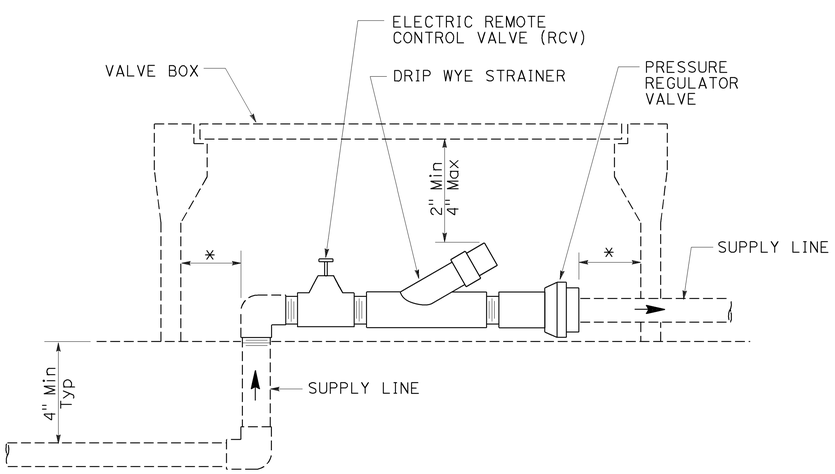

* 2" CLEARANCE ON ALL SIDES

ELEVATION
DRIP VALVE ASSEMBLY

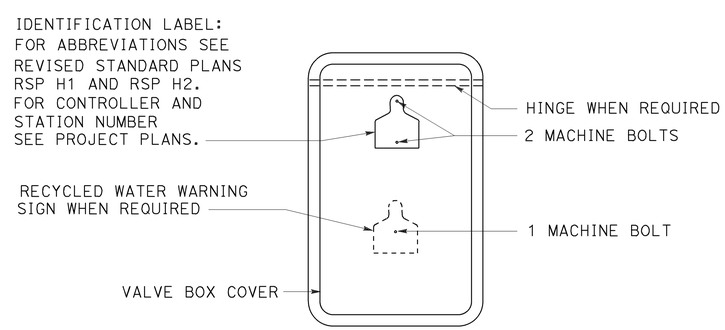

PLAN

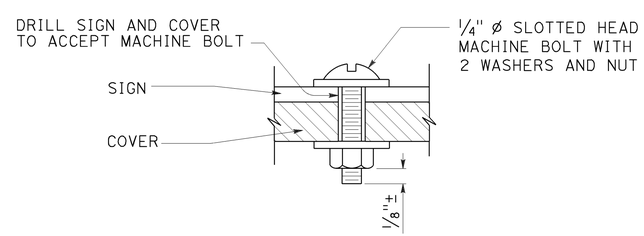

SECTION
VALVE BOX IDENTIFICATION

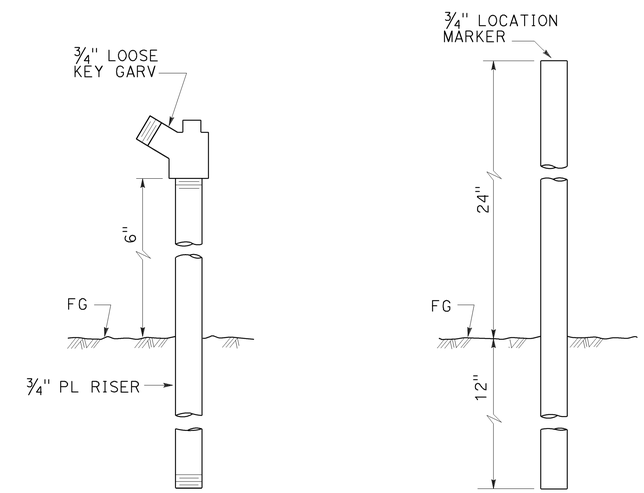

ELEVATION
GARDEN VALVE ASSEMBLY

ELEVATION
LOCATION MARKER

GARDEN VALVE ASSEMBLY

STATE OF CALIFORNIA
DEPARTMENT OF TRANSPORTATION

LANDSCAPE DETAILS

NO SCALE

RSP H7 DATED JULY 19, 2013 SUPERSEDES STANDARD PLAN H7 DATED MAY 20, 2011 - PAGE 224 OF THE STANDARD PLANS BOOK DATED 2010.

REVISED STANDARD PLAN RSP H7

6-20-13

Dist	COUNTY	ROUTE	POST MILES TOTAL PROJECT	SHEET No.	TOTAL SHEETS
04	SM	82, 92	10.4/10.7, R11.0/R11.4	286	370

LICENSED LANDSCAPE ARCHITECT

October 30, 2015
PLANS APPROVAL DATE

LICENSED LANDSCAPE ARCHITECT
Michael V. Ferrara 3899
Signature
9-30-17
Renewal Date
Date
STATE OF CALIFORNIA

THE STATE OF CALIFORNIA OR ITS OFFICERS OR AGENTS SHALL NOT BE RESPONSIBLE FOR THE ACCURACY OR COMPLETENESS OF SCANNED COPIES OF THIS PLAN SHEET.

TO ACCOMPANY PLANS DATED 6-28-16

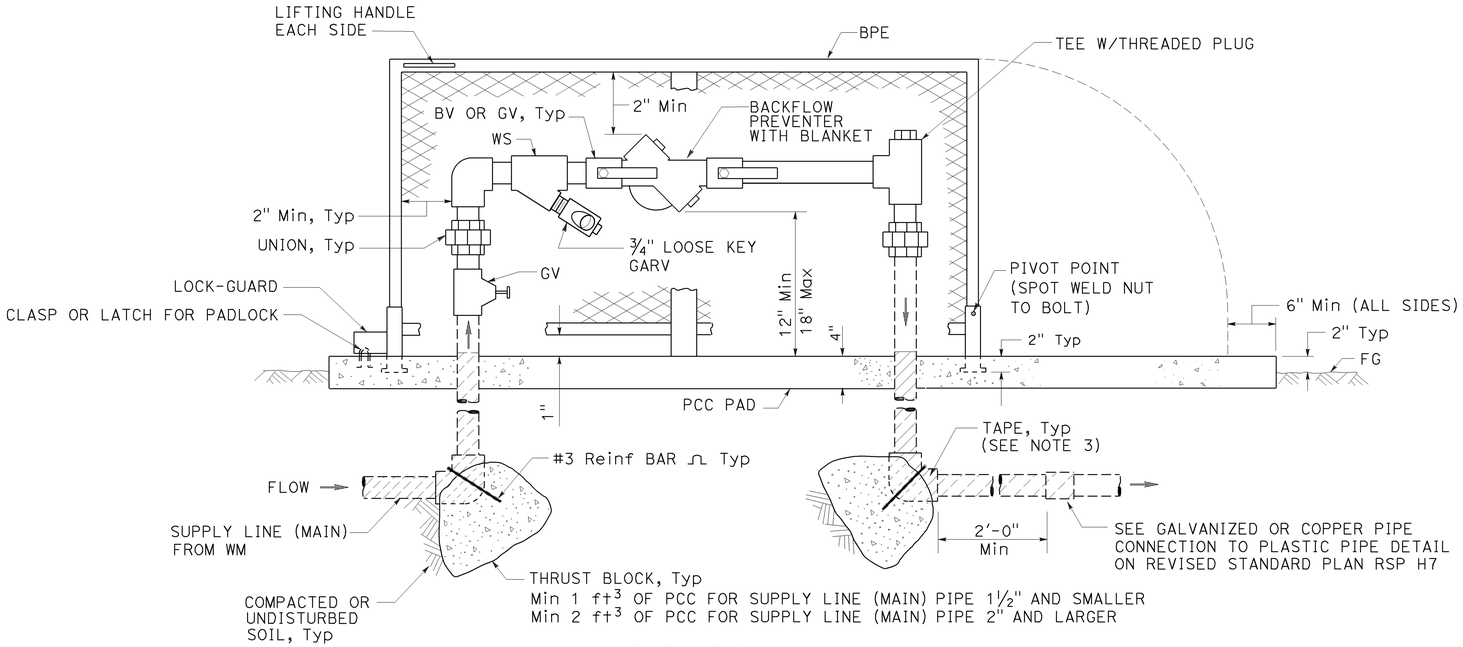

ELEVATION

BACKFLOW PREVENTER ASSEMBLY

IN ONE PIECE ENCLOSURE

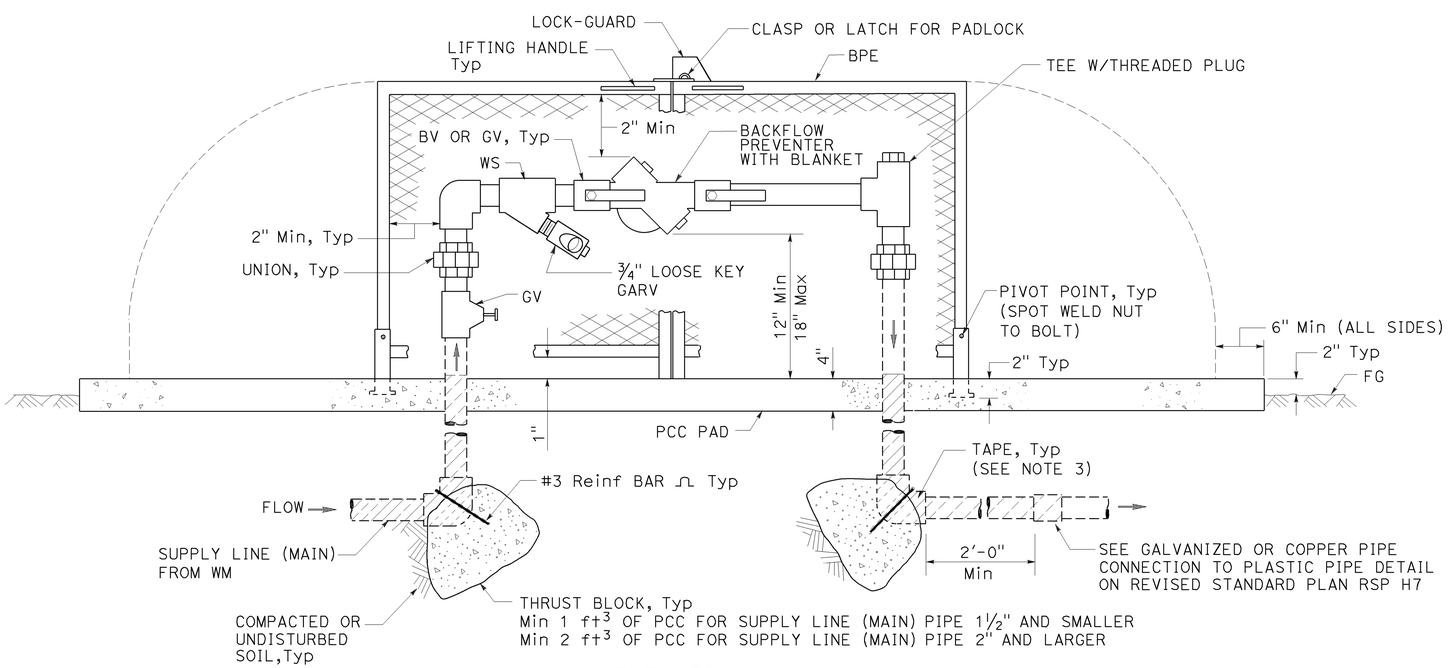

ELEVATION

BACKFLOW PREVENTER ASSEMBLY

IN TWO PIECE ENCLOSURE

NOTES:

1. Wye strainer and fittings must be the same size as the backflow preventer shown on the plans.
2. Backflow preventer assembly manifold pipe must be the same pipe as the supply line (main) pipe to be installed from the water meter to the backflow preventer assembly.
3. All metal in contact with soil and Portland Cement Concrete must be wrapped with 2" wide plastic backed adhesive polyethylene tape 20 mil thick with ½" overlap.

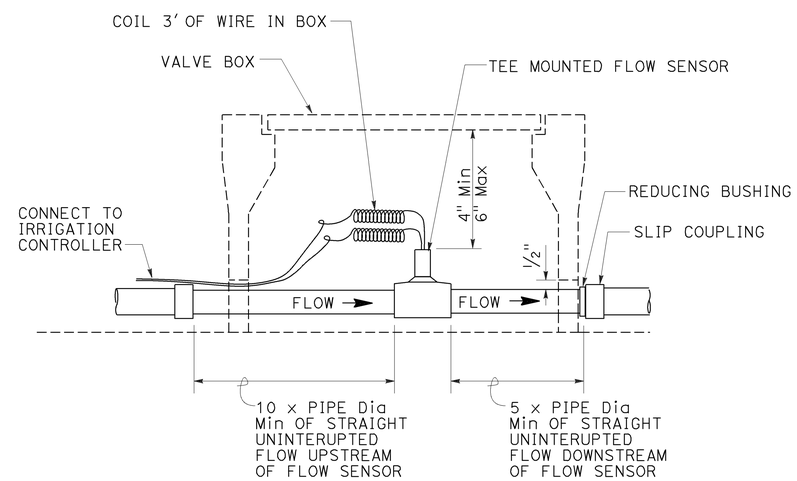

SECTION

FLOW SENSOR

STATE OF CALIFORNIA
DEPARTMENT OF TRANSPORTATION

LANDSCAPE DETAILS

NO SCALE

RSP H8 DATED OCTOBER 30, 2015 SUPERSEDES RSP H8 DATED JULY 19, 2013 AND STANDARD PLAN H8 DATED MAY 20, 2011 - PAGE 225 OF THE STANDARD PLANS BOOK DATED 2010.

REVISED STANDARD PLAN RSP H8

2010 REVISED STANDARD PLAN RSP H8

10-7-15

Dist	COUNTY	ROUTE	POST MILES TOTAL PROJECT	SHEET No.	TOTAL SHEETS
04	SM	82, 92	10.4/10.7, R11.0/R11.4	287	370

Gregory A. Balzer
LICENSED LANDSCAPE ARCHITECT

July 19, 2013
PLANS APPROVAL DATE

LICENSED LANDSCAPE ARCHITECT
Gregory A. Balzer 2576
Gregory A. Balzer
Original Date
2-28-15
Renewal Date
7-19-13
Date
STATE OF CALIFORNIA

THE STATE OF CALIFORNIA OR ITS OFFICERS OR AGENTS SHALL NOT BE RESPONSIBLE FOR THE ACCURACY OR COMPLETENESS OF SCANNED COPIES OF THIS PLAN SHEET.

TO ACCOMPANY PLANS DATED 6-28-16

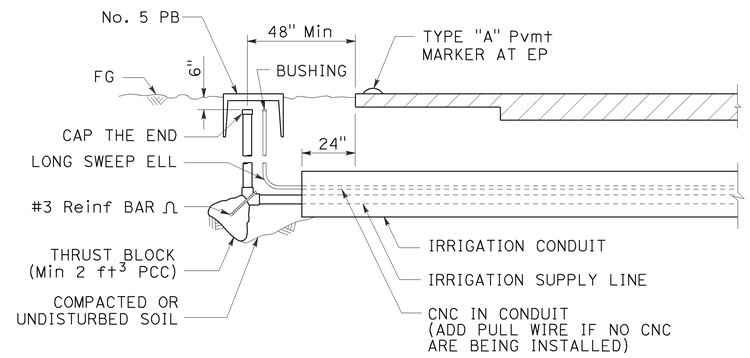

SECTION

IRRIGATION CONDUIT

UNDER TRAVELED WAY

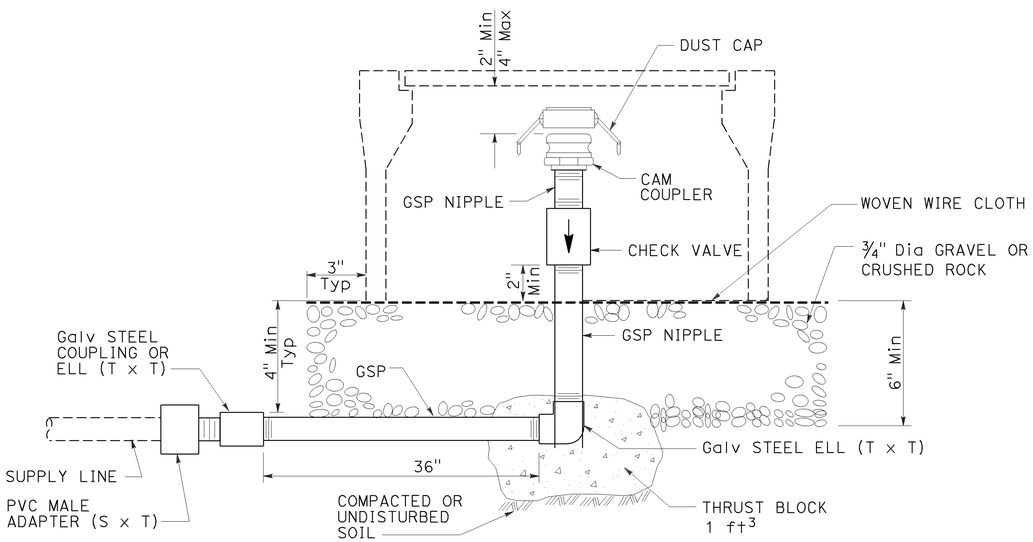

ELEVATION

CAM COUPLER ASSEMBLY

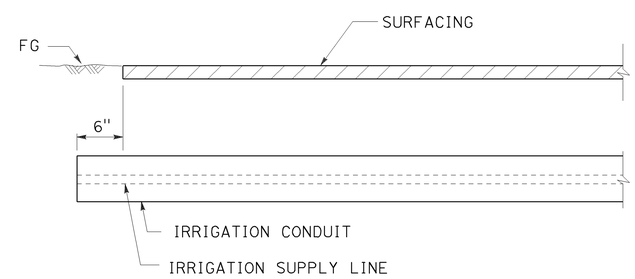

SECTION

IRRIGATION CONDUIT

UNDER SIDEWALKS, DRIVEWAYS AND PATHS

STATE OF CALIFORNIA
DEPARTMENT OF TRANSPORTATION

LANDSCAPE DETAILS

NO SCALE

RSP H9 DATED JULY 19, 2013 SUPERSEDES STANDARD PLAN H9
DATED MAY 20, 2011 - PAGE 226 OF THE STANDARD PLANS BOOK DATED 2010.

REVISED STANDARD PLAN RSP H9

2010 REVISED STANDARD PLAN RSP H9

6-28-13

Dist	COUNTY	ROUTE	POST MILES TOTAL PROJECT	SHEET No.	TOTAL SHEETS
04	SM	82, 92	10.4/10.7, R11.0/R11.4	288	370

Gregory A. Balzer
LICENSED LANDSCAPE ARCHITECT

July 19, 2013
PLANS APPROVAL DATE

LICENSED LANDSCAPE ARCHITECT
Gregory A. Balzer 2576
Expiration Date 2-28-15
Renewal Date 7-19-13
Date
STATE OF CALIFORNIA

THE STATE OF CALIFORNIA OR ITS OFFICERS OR AGENTS SHALL NOT BE RESPONSIBLE FOR THE ACCURACY OR COMPLETENESS OF SCANNED COPIES OF THIS PLAN SHEET.

TO ACCOMPANY PLANS DATED 6-28-16

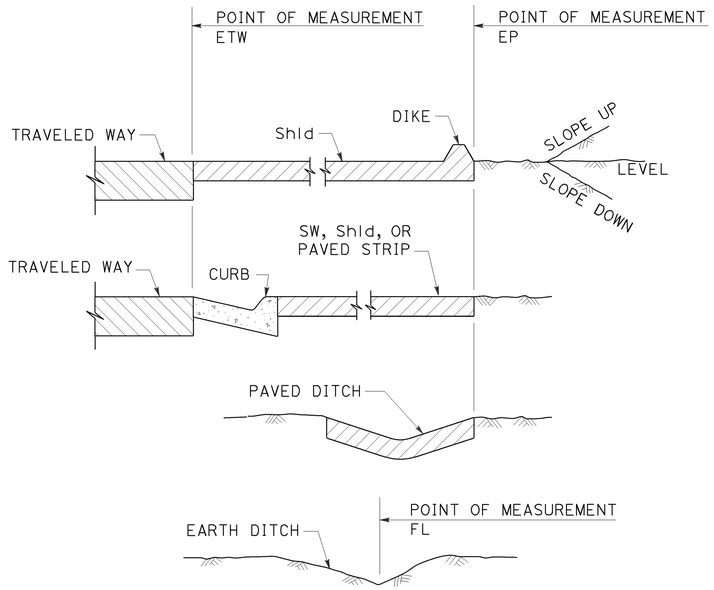

SECTION
POINTS OF MEASUREMENT

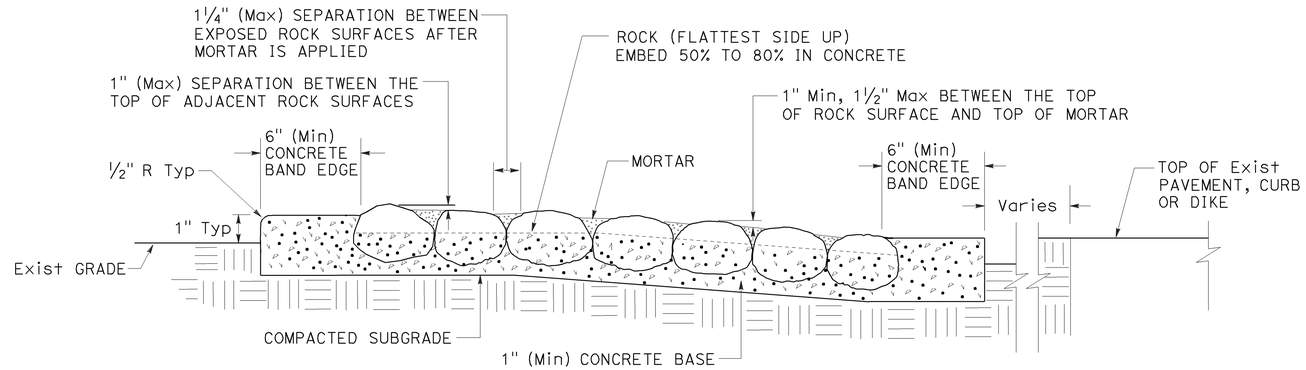

SECTION
ROCK BLANKET

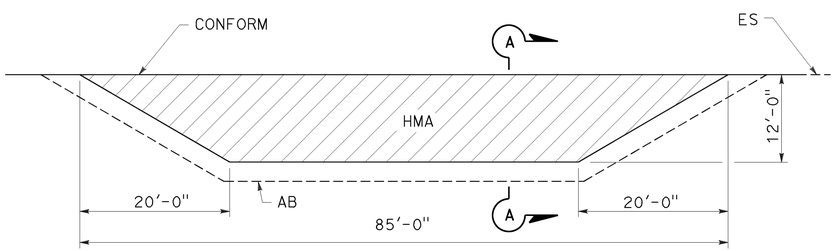

PLAN

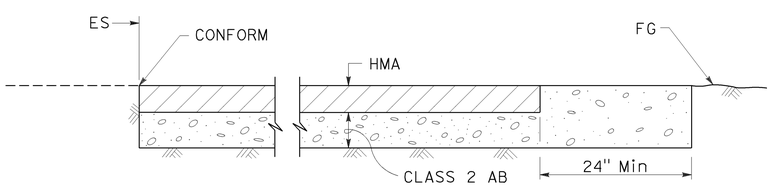

SECTION A-A
MAINTENANCE VEHICLE PULLOUT

STATE OF CALIFORNIA
DEPARTMENT OF TRANSPORTATION

LANDSCAPE DETAILS

NO SCALE

RSP H9A DATED JULY 19, 2013 SUPPLEMENTS THE STANDARD PLANS BOOK DATED 2010.

REVISED STANDARD PLAN RSP H9A

2010 REVISED STANDARD PLAN RSP H9A

6-21-13

Dist	COUNTY	ROUTE	POST MILES TOTAL PROJECT	SHEET No.	TOTAL SHEETS
04	SM	82, 92	10.4/10.7, R11.0/R11.4	289	370

Theresa Gabriel
REGISTERED ELECTRICAL ENGINEER

October 30, 2015
PLANS APPROVAL DATE

REGISTERED PROFESSIONAL ENGINEER Theresa Aziz Gabriel No. E15129 Exp. 6-30-16 ELECTRICAL STATE OF CALIFORNIA

THE STATE OF CALIFORNIA OR ITS OFFICERS OR AGENTS SHALL NOT BE RESPONSIBLE FOR THE ACCURACY OR COMPLETENESS OF SCANNED COPIES OF THIS PLAN SHEET.

TO ACCOMPANY PLANS DATED 6-28-16

LEGEND:

AB	ABANDON. IF APPLIED TO CONDUIT, REMOVE CONDUCTORS
BC	INSTALL PULL BOX IN EXISTING CONDUIT RUN
BP	PEDESTRIAN BARRICADE, TYPE AS INDICATED ON PLAN
CB	INSTALL CONDUIT INTO EXISTING PULL BOX
CC	CONNECT NEW AND EXISTING CONDUIT. REMOVE EXISTING CONDUCTORS AND INSTALL CONDUCTORS AS INDICATED
CF	CONDUIT TO REMAIN FOR FUTURE USE. REMOVE CONDUCTORS. INSTALL PULL TAPE
DH	DETECTOR HANDHOLE
FA	FOUNDATION TO BE ABANDONED
IS	INSTALL SIGN ON SIGNAL MAST ARM
NS	NO SLIP BASE ON STANDARD
PEC	PHOTOELECTRIC CONTROL
PEU	PHOTOELECTRIC UNIT
RC	EQUIPMENT OR MATERIAL TO BE REMOVED AND BECOME THE PROPERTY OF THE CONTRACTOR
RE	REMOVE ELECTROLIER, FUSES AND BALLAST. TAPE ENDS OF CONDUCTORS
RL	RELOCATE EQUIPMENT
RR	REMOVE AND REUSE EQUIPMENT
RS	REMOVE AND SALVAGE EQUIPMENT
SC	SPLICE NEW TO EXISTING CONDUCTORS
SD	SERVICE DISCONNECT
TSP	TELEPHONE SERVICE POINT

ABBREVIATIONS

AC+	UNDERGROUNDED CONDUCTOR
APS	ACCESSIBLE PEDESTRIAN SIGNAL
Batt	BATTERY
BBS	BATTERY BACKUP SYSTEM
BC	BOLT CIRCLE
Blk	BLACK
BP	BYPASS
BPB	BICYCLE PUSH BUTTON
C	CONDUIT
CB	CIRCUIT BREAKER
CCTV	CLOSED CIRCUIT TELEVISION
Ckt	CIRCUIT
CMS	CHANGEABLE MESSAGE SIGN
Ctid	CALTRANS IDENTIFICATION
Comm	COMMUNICATION
Cntl	CONTROL
DF	DEPARTMENT-FURNISHED
DLC	LOOP DETECTOR LEAD-IN CABLE
EMS	EXTINGUISHABLE MESSAGE SIGN
EVUC	EMERGENCY VEHICLE UNIT CABLE
EVUD	EMERGENCY VEHICLE UNIT DETECTOR
FB	FLASHING BEACON
FBCA	FLASHING BEACON CONTROL ASSEMBLY
FBS	FLASHING BEACON WITH SLIP BASE
FO	FIBER OPTIC
G	EQUIPMENT GROUNDING CONDUCTOR
GB	GROUND BUS
GFCI	GROUND FAULT CIRCUIT INTERRUPTER
Grn	GREEN
HAR	HIGHWAY ADVISORY RADIO
Hex	HEXAGONAL
HPS	HIGH PRESSURE SODIUM
IISNS	INTERNALLY ILLUMINATED STREET NAME SIGN
ISL	INDUCTION SIGN LIGHTING
LED	LIGHT EMITTING DIODE
LMA	LUMINAIRE MAST ARM
LPS	LOW PRESSURE SODIUM
Ltg	LIGHTING
Lum	LUMINAIRE
M	METERED
MAT	MAST ARM MOUNTING TOP ATTACHMENT
MAS	MAST ARM MOUNTING SIDE ATTACHMENT
MBPS	MANUAL BYPASS SWITCH
M/M	MULTIPLE TO MULTIPLE TRANSFORMER
Mtg	MOUNTING
MV	MERCURY VAPOR LIGHTING FIXTURE
MVDS	MICROWAVE VEHICLE DETECTION SYSTEM
N	NEUTRAL (GROUNDED CONDUCTOR)
NB	NEUTRAL BUS
NC	NORMALLY CLOSE
NO	NORMALLY OPEN
P	CIRCUIT BREAKER'S POLE
PB	PULL BOX
PBA	PUSH BUTTON ASSEMBLY
PEC	PHOTOELECTRIC CONTROL
Ped	PEDESTRIAN
PEU	PHOTOELECTRIC UNIT
PT	CONDUIT WITH PULL TAPE
PTR	POWER TRANSFER RELAY
RE	RELOCATED EQUIPMENT
RM	RAMP METERING
RWIS	ROADSIDE WEATHER INFORMATION SYSTEM
SB	SLIP BASE
SIC	SIGNAL INTERCONNECT CABLE
Sig	SIGNAL
SMA	SIGNAL MAST ARM
SNS	STREET NAME SIGN
SP	SERVICE POINT
TB	TERMINAL BOARD
TDC	TELEPHONE DEMARCATION CABINET
Temp	TEMPERATURE
TMS	TRAFFIC MONITORING STATION
TOS	TRAFFIC OPERATIONS SYSTEM
UPS	UNINTERRUPTABLE POWER SUPPLY
UPSC	UNINTERRUPTABLE POWER SUPPLY CONTROLLER
Veh	VEHICLE
VIVDS	VIDEO IMAGE VEHICLE DETECTION SYSTEM
Wht	WHITE
WIM	WEIGH-IN-MOTION
Xfmr	TRANSFORMER

SOFFIT AND WALL-MOUNTED LUMINAIRES

- PENDANT SOFFIT LUMINAIRE, 70 W HPS UNLESS OTHERWISE SPECIFIED
- FLUSH-MOUNTED SOFFIT LUMINAIRE, 70 W HPS UNLESS OTHERWISE SPECIFIED
- WALL-MOUNTED LUMINAIRE, 70 W HPS UNLESS OTHERWISE SPECIFIED
- EXISTING SOFFIT OR WALL-MOUNTED LUMINAIRE TO REMAIN UNMODIFIED
- (M) EXISTING SOFFIT OR WALL-MOUNTED LUMINAIRE TO BE MODIFIED AS SPECIFIED

NOTE:
Arrow indicates "street side" of luminaire.

COMMONLY USED SYMBOLS FOR UNITED STATES CUSTOMARY UNITS OF MEASUREMENT:

SYMBOL	DEFINITIONS
Ω	OHMS
min	MINUTE
s	SECOND
bps	BITS PER SECOND
Bps	BYTES PER SECOND
A	AMPERE
V	VOLT
V(dc)	VOLT (DIRECT CURRENT)
V(ac)	VOLT (ALTERNATING CURRENT)
FC	FOOT - CANDLE
W	WATTS
VA	VOLT-AMPERE
M	MEGA
k	KILO
m	MILLI
μ	MICRO
P	PICO
Hz	HERTZ

MISCELLANEOUS ELECTROLIERS

NEW	EXISTING	
		LUMINAIRE ON WOOD POLE
		NON-STANDARD ELECTROLIER (SEE PROJECT LEGEND)
		CITY ELECTROLIER
		ELECTROLIER FOUNDATION (FUTURE INSTALLATION)

NOTES:

1. LED luminaires shall be 235 W when installed on Type 21, 21D, 30, 31 and 32 Standards, unless otherwise specified. LED luminaires shall be 165 W when installed on other type standards or poles, unless otherwise specified.
2. Luminaires shall be the cutoff type, ANSI Type III medium cutoff lighting distribution, unless otherwise specified.

STANDARD ELECTROLIER

NEW	EXISTING	STANDARD TYPE
		15
		15D
		15 STRUCTURE
		15D STRUCTURE
		21
		21D
		21 STRUCTURE
		21D STRUCTURE
		30
		31
		32

STATE OF CALIFORNIA
DEPARTMENT OF TRANSPORTATION

ELECTRICAL SYSTEMS (LEGEND AND ABBREVIATIONS)

NO SCALE

RSP ES-1A DATED OCTOBER 30, 2015 SUPERSEDES RSP ES-1A DATED JULY 19, 2013 AND STANDARD PLAN ES-1A DATED MAY 20, 2011 - PAGE 425 OF THE STANDARD PLANS BOOK DATED 2010.

REVISED STANDARD PLAN RSP ES-1A

2010 REVISED STANDARD PLAN RSP ES-1A

9-29-15

Dist	COUNTY	ROUTE	POST MILES TOTAL PROJECT	SHEET No.	TOTAL SHEETS
04	SM	82, 92	10.4/10.7, R11.0/R11.4	290	370

Theresa Gabriel
REGISTERED ELECTRICAL ENGINEER

October 30, 2015
PLANS APPROVAL DATE

REGISTERED PROFESSIONAL ENGINEER Theresa Aziz Gabriel No. E15129 Exp. 6-30-16 ELECTRICAL STATE OF CALIFORNIA

THE STATE OF CALIFORNIA OR ITS OFFICERS OR AGENTS SHALL NOT BE RESPONSIBLE FOR THE ACCURACY OR COMPLETENESS OF SCANNED COPIES OF THIS PLAN SHEET.

TO ACCOMPANY PLANS DATED 6-28-16

CONDUIT

NEW	EXISTING	
		LIGHTING CONDUIT, UNLESS OTHERWISE INDICATED OR NOTED
		TRAFFIC SIGNAL CONDUIT
C	c	COMMUNICATION CONDUIT
T	t	TELEPHONE CONDUIT
F	f	FIRE ALARM CONDUIT
FO	fo	FIBER OPTIC CONDUIT
		CONDUIT TERMINATION
R	r	CONDUIT RISER ATTACHED TO THE STRUCTURE OR SERVICE POLE

SERVICE EQUIPMENT

NEW	EXISTING	
OH	oh	OVERHEAD LINES
U	U	WOOD POLE, "U" INDICATES UTILITY OWNED
		POLE GUY WITH ANCHOR
		UTILITY TRANSFORMER - GROUND MOUNTED
III	III	SERVICE EQUIPMENT ENCLOSURE TYPE. DOOR INDICATES FRONT OF ENCLOSURE
T	t	TELEPHONE DEMARCATION CABINET

POLE-MOUNTED SERVICE DESIGNATION

TYPE H SERVICE, 28'-10" — TYPE OF INSTALLATION AND POLE HEIGHT ABOVE GRADE

FLASHING BEACON

NEW	EXISTING	
R	R	FLASHING BEACON (ONE VEHICLE SIGNAL HEAD WITH BACKPLATE AND VISOR) "R" INDICATES RED INDICATION, "Y" INDICATES YELLOW INDICATION
Y Y	Y Y	FLASHING BEACON WITH TYPE 15-FBS STANDARD AND A SIGN.
R R	R R	FLASHING BEACON WITH TYPES 9, 9A OR 9B SIGN UNLESS OTHERWISE SPECIFIED OR INDICATED

SIGNAL EQUIPMENT

NEW	EXISTING	
		PEDESTRIAN SIGNAL HEAD
		PUSH BUTTON ASSEMBLY POST
		PEDESTRIAN BARRICADE
		VEHICLE SIGNAL HEAD (WITH BACKPLATE AND 3-SECTIONS: RED, YELLOW AND GREEN)
		VEHICLE SIGNAL HEAD WITH ANGLE VISOR
PV	PV	MODIFICATIONS OF BASIC SYMBOL: "L" INDICATES ALL NON-ARROW SECTIONS LOUVERED "LG" INDICATES LOUVERED GREEN SECTION ONLY "PV" INDICATES ALL 12" SECTIONS PROGRAMMED VISIBILITY "8" INDICATES ALL 8" SECTIONS (ONLY WHEN SPECIFIED)
		VEHICLE SIGNAL HEAD CONSISTING OF RED, YELLOW AND GREEN LEFT ARROW SECTIONS
		VEHICLE SIGNAL HEAD CONSISTING OF RED AND YELLOW SECTIONS WITH AN UP GREEN ARROW SECTION
		VEHICLE SIGNAL HEAD (5 SECTION) CONSISTING OF RED, YELLOW AND GREEN SECTIONS WITH YELLOW AND GREEN RIGHT ARROW SECTIONS
		TYPE 15TS STANDARD WITH VEHICLE SIGNAL HEAD AND LUMINAIRE
		TYPE 21TS STANDARD WITH VEHICLE SIGNAL HEAD AND LUMINAIRE
		STANDARD WITH LUMINAIRE AND SIGNAL MAST ARMS AND ATTACHED VEHICLE SIGNAL HEADS
		TYPE 1 STANDARD WITH ATTACHED VEHICLE SIGNAL HEADS
		STANDARD WITH A SIGNAL MAST ARM, ATTACHED VEHICLE SIGNAL HEADS AND INTERNALLY ILLUMINATED STREET NAME SIGN
		CONTROLLER ASSEMBLY. DOOR INDICATES FRONT OF CABINET

SIGNAL EQUIPMENT Cont

NEW	EXISTING	
		GUARD POST
		TYPE 1 STANDARD WITH RAMP METERING SIGN
		OPTICAL DETECTOR FOR THE EMERGENCY VEHICLE DETECTION

NOTES:

1. All signal sections shall be 12" unless shown otherwise.
2. Signal heads shall be provided with backplates unless shown otherwise.

ILLUMINATED OVERHEAD SIGN

NEW	EXISTING	
		SINGLE POST, SINGLE ILLUMINATED SIGN, BALANCED BUTTERFLY
		SINGLE POST, DOUBLE ILLUMINATED SIGN, BALANCED BUTTERFLY
		SINGLE POST, SINGLE ILLUMINATED SIGN, FULL CANTILEVER
		DOUBLE POST, SINGLE ILLUMINATED SIGN
		SINGLE ILLUMINATED SIGN MOUNTED ON STRUCTURE
		DOUBLE POST, SINGLE ILLUMINATED SIGN WITH ELECTROLIER

STATE OF CALIFORNIA
DEPARTMENT OF TRANSPORTATION

ELECTRICAL SYSTEMS (LEGEND AND ABBREVIATIONS)

NO SCALE

RSP ES-1B DATED OCTOBER 30, 2015 SUPERSEDES RSP ES-1B DATED JULY 19, 2013 AND STANDARD PLAN ES-1B DATED MAY 20, 2011 - PAGE 426 OF THE STANDARD PLANS BOOK DATED 2010.

REVISED STANDARD PLAN RSP ES-1B

2010 REVISED STANDARD PLAN RSP ES-1B

8-19-15

Dist	COUNTY	ROUTE	POST MILES TOTAL PROJECT	SHEET No.	TOTAL SHEETS
04	SM	82, 92	10.4/10.7, R11.0/R11.4	291	370

Theresa Gabriel
REGISTERED ELECTRICAL ENGINEER

October 30, 2015
PLANS APPROVAL DATE

REGISTERED PROFESSIONAL ENGINEER
Theresa Aziz Gabriel
No. E15129
Exp. 6-30-16
ELECTRICAL
STATE OF CALIFORNIA

THE STATE OF CALIFORNIA OR ITS OFFICERS OR AGENTS SHALL NOT BE RESPONSIBLE FOR THE ACCURACY OR COMPLETENESS OF SCANNED COPIES OF THIS PLAN SHEET.

TO ACCOMPANY PLANS DATED 6-28-16

EQUIPMENT IDENTIFICATION

ILLUMINATED SIGN IDENTIFICATION NUMBER:

SIGN No. 12345
10 ISL SCI 1.0

- SIGN NUMBER - PLACE ON POST OR STRUCTURE
- TRANSFORMER RATING (kVA)
- LIGHTING CONTROL TYPE
- NUMBER AND TYPE OF FIXTURES

} DO NOT PLACE ON STANDARD OR STRUCTURE

ELECTROLIER OR EQUIPMENT IDENTIFICATION NUMBER:

12345 - 15'-0"

- MAST ARM LENGTH, IF SHOWN. DO NOT PLACE ON STANDARD OR STRUCTURE
- EQUIPMENT NUMBER - PLACE ON STANDARD OR STRUCTURE. EXISTING EQUIPMENT NUMBERS ARE SHOWN IN PARENTHESIS

CONDUIT AND CONDUCTOR IDENTIFICATION:

1½"C, 2#10, 15#14, 2 DLC, 12P#18

- PAIR
- NUMBER AND SIZE OF CONDUCTORS AND CABLES
- SIZE OF CONDUIT IN INCHES

ø1, ø2, ø2P, etc.	TRAFFIC PHASE IDENTIFICATION FOR SIGNALS, DETECTORS AND PHASE DIAGRAMS
1 2 3	LEGEND NUMBERS
A B C	EQUIPMENT, SIGNAL POLES, INSTALLATION OR ITEMS
1 2 3	CONDUIT RUN NUMBERS

SIGNAL AND LIGHTING STANDARD (TYPICAL DESIGNATION):

19A - 3 - 100

- WIND VELOCITY = 100 mph
- CASE 3 ARM LOADING
- STANDARD TYPE
- STANDARD PLAN SHEET NUMBER
- DETAIL, NUMBER, SECTION, TYPE OR ELEVATION

MISCELLANEOUS EQUIPMENT

NEW	EXISTING	
CMS	cms	CHANGEABLE MESSAGE SIGN
		CLOSED CIRCUIT TELEVISION CAMERA
		HIGHWAY ADVISORY RADIO POLE AND ANTENNA
EMS	ems	LED EXTINGUISHABLE MESSAGE SIGN
M V	m v	DETECTION DEVICE M = MICROWAVE SENSOR V = VIDEO IMAGE SENSOR

WIRING DIAGRAM LEGEND

----	EXTERNAL CONDUCTOR
——	CONDUCTOR OR BUS
	TIE POINT
	CONTACTOR COIL
	CONTACTOR, NO CONTACT
	TERMINAL BLOCKS
	CONTACTOR, NC CONTACT
	ENCLOSURE BOND
	GROUNDING ELECTRODE
	CIRCUIT BREAKER
	RECEPTACLE

PULL BOXES

NEW	EXISTING	
		PULL BOX, No. 5 UNLESS OTHERWISE INDICATED OR NOTED
3	9A(21)	PULL BOX, ADDITIONAL DESIGNATIONS OR DESCRIPTIONS

3 No. 3½ PULL BOX
5 No. 5 PULL BOX
6 No. 6 PULL BOX
7 No. 7 (CEILING PULL BOX)
8 No. 8 (PENDANT SOFFIT PULL BOX)
9 No. 9 PULL BOX
9A No. 9A PULL BOX

(C) COMMUNICATIONS PULL BOX
(E) PULL BOX WITH EXTENSION
(S) SPRINKLER CONTROL PULL BOX
(21) ANCHOR BOLTS AND CONDUIT FOR FUTURE INSTALLATION OF TYPE 21 STANDARD
(T) TRAFFIC PULL BOX

VEHICLE DETECTORS

5 J 9 U

- VEHICLE DETECTOR DESIGNATION
- U = UPPER
  L = LOWER
- SLOT NUMBER IN INPUT FILE
- INPUT FILE (I OR J)
- PHASE

NEW	EXISTING	
		TYPE A LOOP DETECTOR. OUTLINE OF SAWCUT SHOWN
		TYPE B LOOP DETECTOR. OUTLINE OF SAWCUT SHOWN
		TYPE C LOOP DETECTOR. OUTLINE OF SAWCUT SHOWN
		TYPE D LOOP DETECTOR. OUTLINE OF SAWCUT SHOWN
		TYPE E LOOP DETECTOR. OUTLINE OF SAWCUT SHOWN
		TYPE Q LOOP DETECTOR. OUTLINE OF SAWCUT SHOWN
DH	dh	DETECTOR HANDHOLE
		MICROWAVE OR VIDEO DETECTION ZONE

STATE OF CALIFORNIA
DEPARTMENT OF TRANSPORTATION

ELECTRICAL SYSTEMS (LEGEND AND ABBREVIATIONS)

NO SCALE

RSP ES-1C DATED OCTOBER 30, 2015 SUPERSEDES RSP ES-1C DATED JULY 19, 2013 AND STANDARD PLAN ES-1C DATED MAY 20, 2011 - PAGE 427 OF THE STANDARD PLANS BOOK DATED 2010.

REVISED STANDARD PLAN RSP ES-1C

2010 REVISED STANDARD PLAN RSP ES-1C

8-19-15

Dist	COUNTY	ROUTE	POST MILES TOTAL PROJECT	SHEET No.	TOTAL SHEETS
04	SM	82, 92	10.4/10.7, R11.0/R11.4	292	370

Theresa Gabriel
REGISTERED ELECTRICAL ENGINEER

October 30, 2015
PLANS APPROVAL DATE

REGISTERED PROFESSIONAL ENGINEER
Theresa Aziz Gabriel
No. E15129
Exp. 6-30-16
ELECTRICAL
STATE OF CALIFORNIA

THE STATE OF CALIFORNIA OR ITS OFFICERS OR AGENTS SHALL NOT BE RESPONSIBLE FOR THE ACCURACY OR COMPLETENESS OF SCANNED COPIES OF THIS PLAN SHEET.

TO ACCOMPANY PLANS DATED 6-28-16

2010 REVISED STANDARD PLAN RSP ES-2C

NOTES:

1. The plan shows the approximate location of devices within the enclosure. Components may be rearranged, however, the "working" clearances within the service equipment enclosure shall be maintained.

2. In unpaved areas a raised portland cement concrete pad 2'-0" x 4" x width of foundation shall be constructed in front of new service equipment enclosure installation. Pad shall be set to elevation of foundation.

3. Plug-in circuit breakers may be mounted in the vertical or horizontal position. Cable-in/cable-out circuit breakers shall be mounted in the vertical position.

4. Type III-AF and Type III-BF service equipment enclosures shall have the meter viewing windows located on the front side of the service equipment enclosures.

5. Type III-AR and Type III-BR service equipment enclosure shall be similarly constructed as Type III-AF and Type III-BF respectively, except the meter viewing windows shall be located on the back side of the service equipment enclosures.

STATE OF CALIFORNIA
DEPARTMENT OF TRANSPORTATION

ELECTRICAL SYSTEMS (SERVICE EQUIPMENT ENCLOSURE NOTES TYPE III SERIES)

NO SCALE

RSP ES-2C DATED OCTOBER 30, 2015 SUPERSEDES STANDARD PLAN ES-2C DATED MAY 20, 2011 - PAGE 430 OF THE STANDARD PLANS BOOK DATED 2010.

REVISED STANDARD PLAN RSP ES-2C

Dist	COUNTY	ROUTE	POST MILES TOTAL PROJECT	SHEET No.	TOTAL SHEETS
04	SM	82, 92	10.4/10.7, R11.0/R11.4	293	370

Theresa Gabriel
REGISTERED ELECTRICAL ENGINEER

October 30, 2015
PLANS APPROVAL DATE

REGISTERED PROFESSIONAL ENGINEER Theresa Aziz Gabriel No. E15129 Exp. 6-30-16 ELECTRICAL STATE OF CALIFORNIA

THE STATE OF CALIFORNIA OR ITS OFFICERS OR AGENTS SHALL NOT BE RESPONSIBLE FOR THE ACCURACY OR COMPLETENESS OF SCANNED COPIES OF THIS PLAN SHEET.

TO ACCOMPANY PLANS DATED 6-28-16

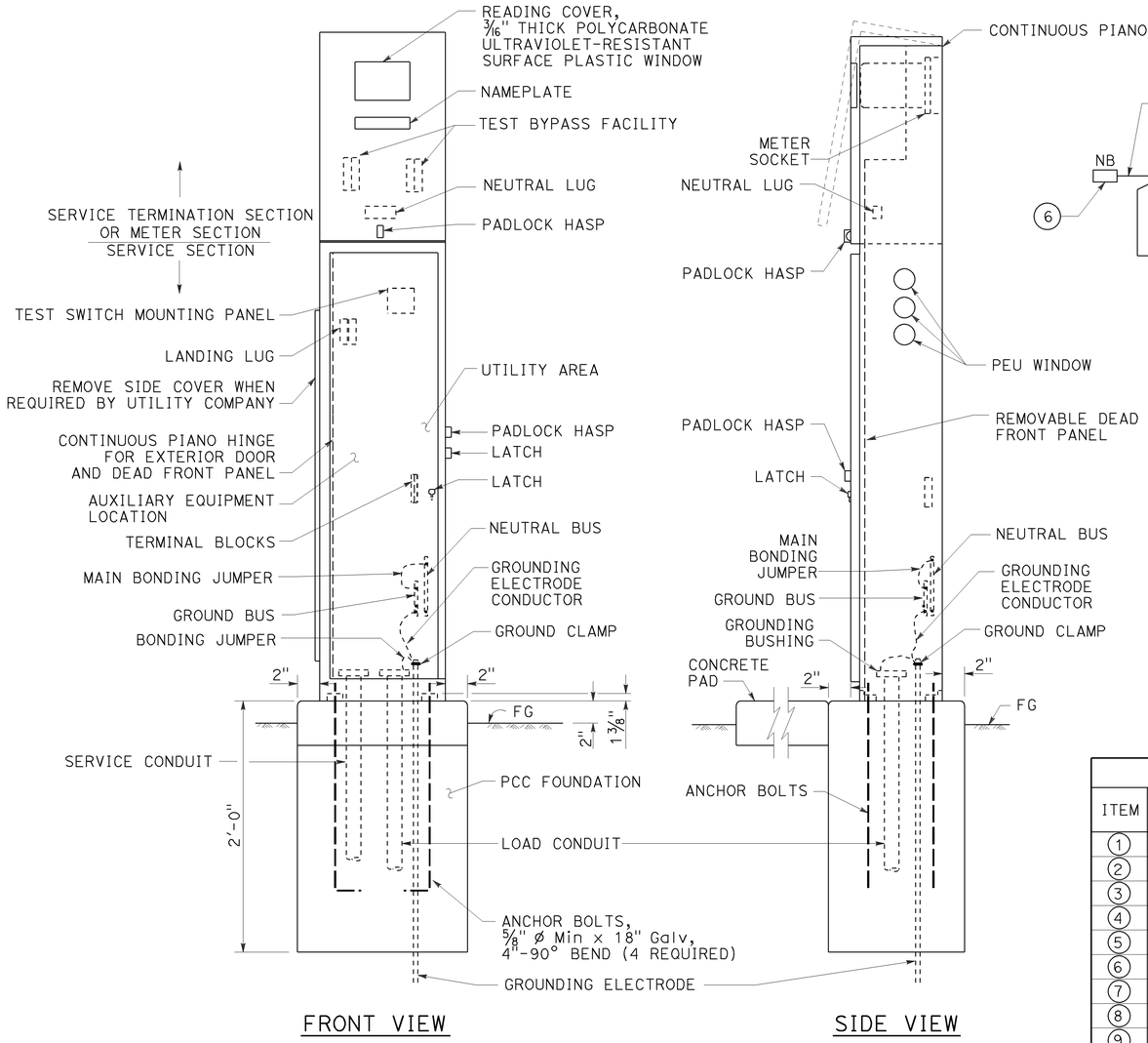

TYPE III-AF SERVICE EQUIPMENT ENCLOSURE (TYPICAL)

DETAIL A

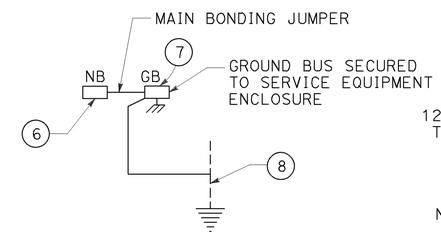

DETAIL D

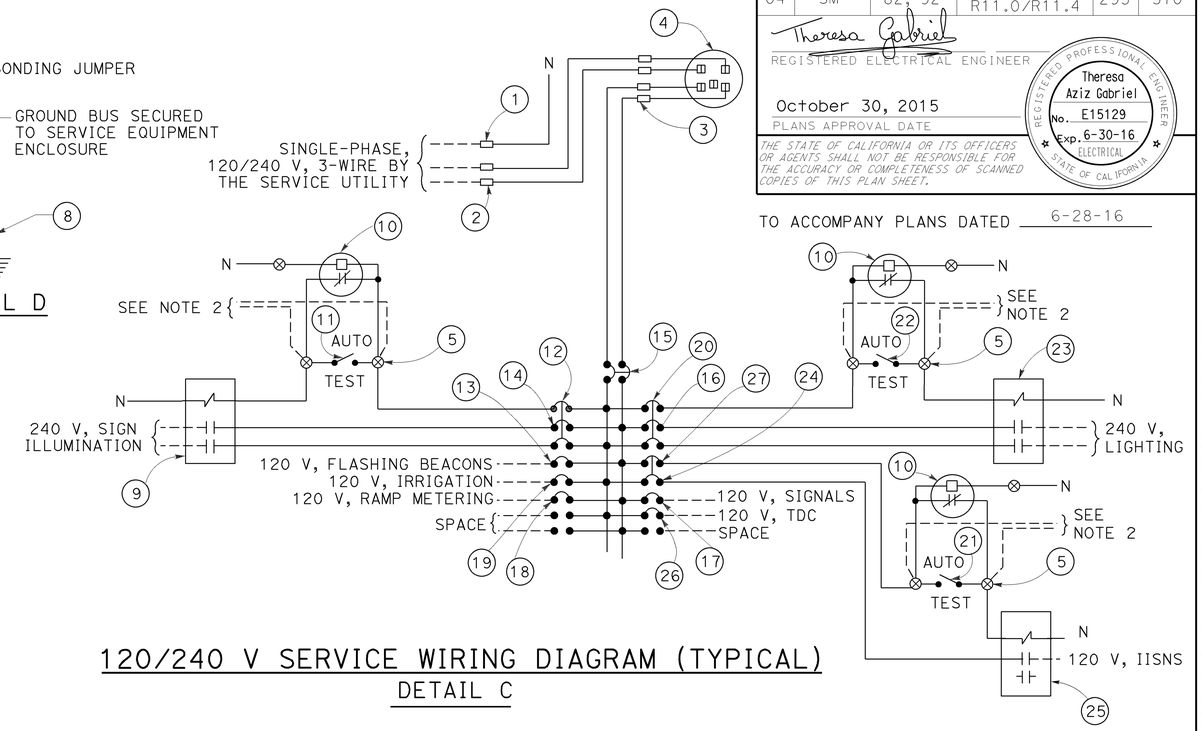

120/240 V SERVICE WIRING DIAGRAM (TYPICAL)

DETAIL C

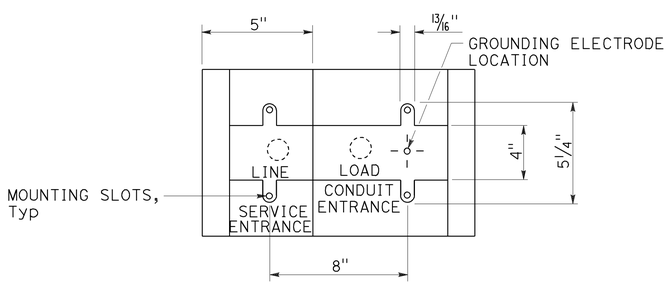

BASE FOR TYPE III-A SERVICE EQUIPMENT ENCLOSURE

DETAIL B

TYPE III-A SERVICE EQUIPMENT ENCLOSURE LEGEND (120/240 V)

ITEM	COMPONENT	NAMEPLATE DESCRIPTION	ITEM	COMPONENT	NAMEPLATE DESCRIPTION
1	NEUTRAL LUG		14	30 A, 240 V, 2P, CB	SIGN ILLUMINATION
2	LANDING LUG		15	100 A, 240 V, 2P, CB	MAIN BREAKER
3	TEST BYPASS FACILITY		16	30 A, 240 V, 2P, CB	LIGHTING
4	METER SOCKET AND SUPPORT		17	50 A, 120 V, 1P, CB	SIGNALS
5	TERMINAL BLOCKS		18	30 A, 120 V, 1P, CB	RAMP METERING
6	NEUTRAL BUS		19	20 A, 120 V, 1P, CB	IRRIGATION
7	GROUND BUS		20	15 A, 120 V, 1P, CB	LIGHTING CONTROL
8	GROUNDING ELECTRODE		21	15 A, 1P, TEST SWITCH	IISNS TEST SWITCH
9	30 A, 2P, NO CONTACTOR	SIGN ILLUMINATION	22	15 A, 1P, TEST SWITCH	LIGHTING TEST SWITCH
10	PHOTOELECTRIC UNIT (NOTE 4)	PEU	23	60 A, 2P, NO CONTACTOR	LIGHTING
11	15 A, 1P, TEST SWITCH	SIGN ILLUMINATION TEST SWITCH	24	15 A, 120 V, 1P, CB	IISNS
12	15 A, 120 V, 1P, CB	SIGN ILLUMINATION CONTROL	25	30 A, 2P, NO CONTACTOR	IISNS
13	15 A, 120 V, 1P, CB	FLASHING BEACON	26	20 A, 120 V, 1P, CB	TELEPHONE DEMARCATION CABINET
			27	15 A, 120 V, 1P, CB	IISNS CONTROL

NOTES:

1. Unless otherwise indicated on the plans, service equipment items shall be provided for each service equipment enclosure as shown.
2. Connect to remote test switch mounted on lighting standards, sign post or structure when required.
3. Items 1 and 6 shall be isolated from the service equipment enclosure.
4. Type V photoelectric control shall be used unless otherwise indicated on the plans.
5. Item 12, 20 and 27 shall be ganged operated CB.

STATE OF CALIFORNIA
DEPARTMENT OF TRANSPORTATION

ELECTRICAL SYSTEMS (SERVICE EQUIPMENT ENCLOSURE AND TYPICAL WIRING DIAGRAM, TYPE III-A SERIES)

NO SCALE

RSP ES-2D DATED OCTOBER 30, 2015 SUPERSEDES STANDARD PLAN ES-2D DATED MAY 20, 2011 - PAGE 431 OF THE STANDARD PLANS BOOK DATED 2010.

REVISED STANDARD PLAN RSP ES-2D

2010 REVISED STANDARD PLAN RSP ES-2D

Dist	COUNTY	ROUTE	POST MILES TOTAL PROJECT	SHEET No.	TOTAL SHEETS
04	SM	82, 92	10.4/10.7, R11.0/R11.4	294	370

Theresa Gabriel
REGISTERED ELECTRICAL ENGINEER

October 30, 2015
PLANS APPROVAL DATE

REGISTERED PROFESSIONAL ENGINEER
Theresa Aziz Gabriel
No. E15129
Exp. 6-30-16
ELECTRICAL
STATE OF CALIFORNIA

THE STATE OF CALIFORNIA OR ITS OFFICERS OR AGENTS SHALL NOT BE RESPONSIBLE FOR THE ACCURACY OR COMPLETENESS OF SCANNED COPIES OF THIS PLAN SHEET.

TO ACCOMPANY PLANS DATED 6-28-16

2010 REVISED STANDARD PLAN RSP ES-3C

NOTES:

1. Foundation shall be located to provide 2'-0" minimum clearance between face of curb and any portion of cabinet.
2. Controller units, plug-mounted equipment, shelf-mounted equipment and wall-mounted equipment shall be located to permit safe and easy removal or replacement without removing any other piece of equipment.
3. Cabinet fan may be installed at an alternate location near the top of the cabinet when approved by the Engineer.
4. Where telephone interconnect is required, a minimum of 5" clear vertical space shall be provided inside the cabinet for the equipment.
5. Telephone interconnect conductors shall be enclosed in a ¾"C or larger conduit through the foundation. Type 4 conduit shall be used to separate telephone and power conductors in cabinets.

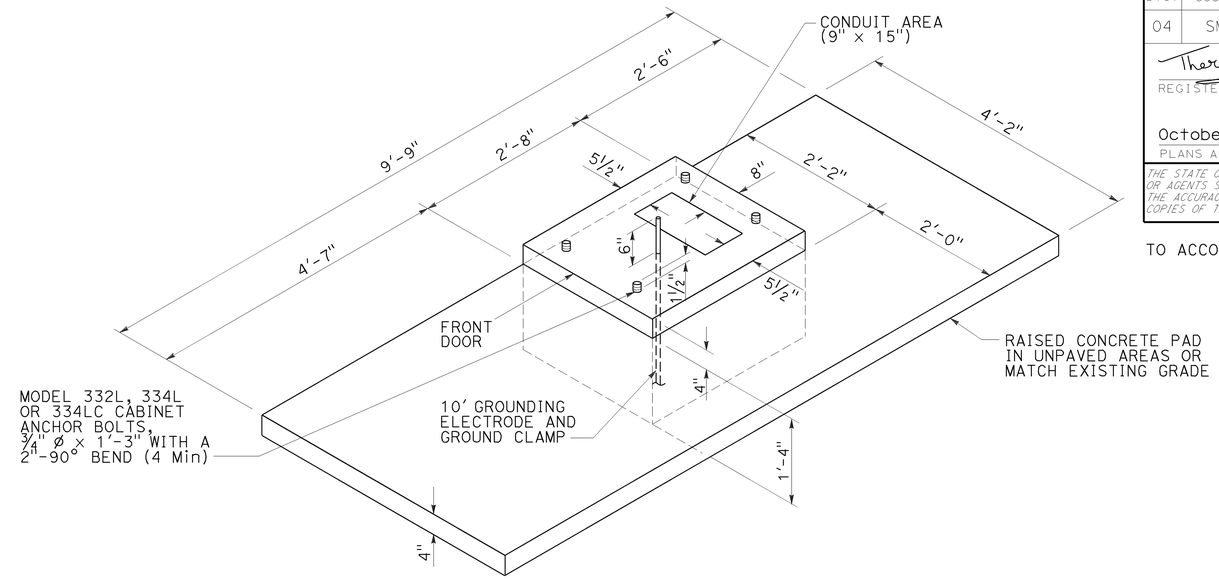

FOUNDATION AND PAD DETAIL

Model 332L, 334L and 334LC

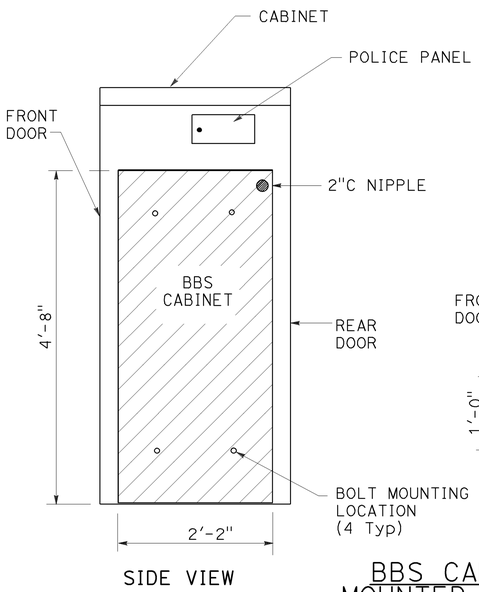

SIDE VIEW

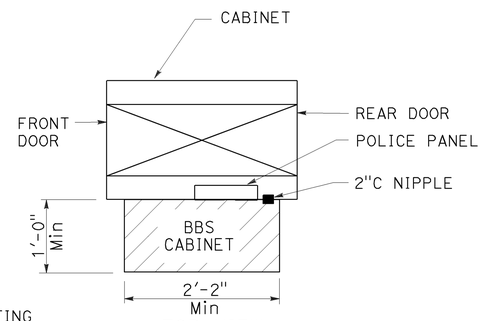

TOP VIEW

BBS CABINET MOUNTED TO THE MODEL 332L CABINET

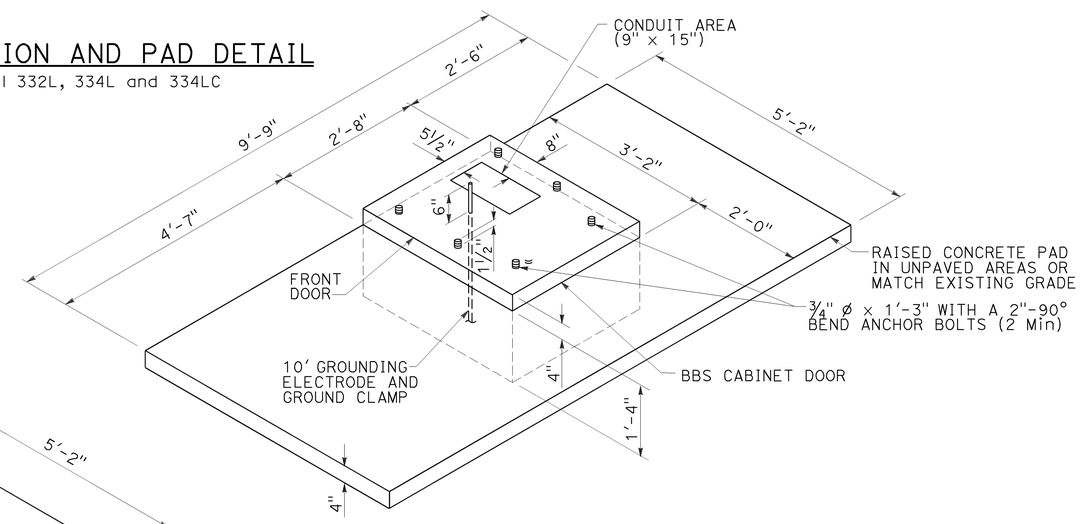

RIGHT SIDE INSTALLATION

DETAIL B

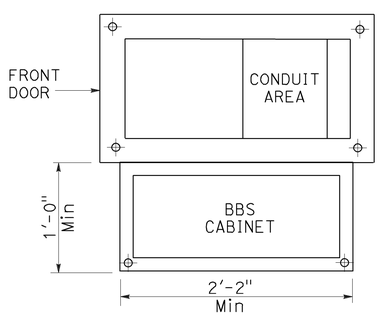

BASE PLAN FOR BBS MOUNTED TO THE MODEL 332L CABINET

(FOR DIMENSIONS AND DETAILS NOT SHOWN, SEE CABINET HOUSING DETAILS OF THE TRANSPORTATION ELECTRICAL EQUIPMENT SPECIFICATION (TEES))

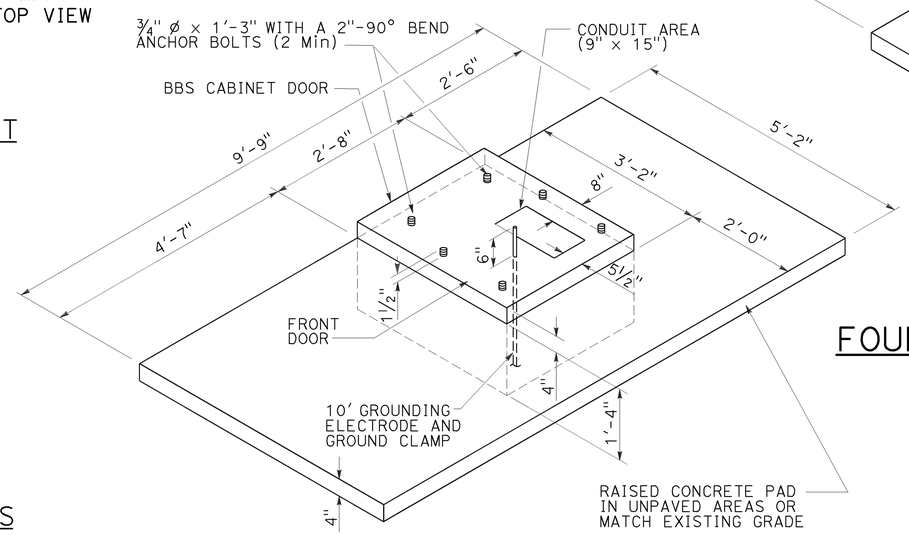

LEFT SIDE INSTALLATION

DETAIL A

MODIFIED MODEL 332L CABINET FOUNDATION DETAIL FOR BATTERY BACKUP SYSTEM

STATE OF CALIFORNIA
DEPARTMENT OF TRANSPORTATION

ELECTRICAL SYSTEMS (CONTROLLER CABINET FOUNDATION AND PAD DETAILS)

NO SCALE

RSP ES-3C DATED OCTOBER 30, 2015 SUPERSEDES STANDARD PLAN ES-3C DATED MAY 20, 2011 - PAGE 437 OF THE STANDARD PLANS BOOK DATED 2010.

REVISED STANDARD PLAN RSP ES-3C

9-2-15

Dist	COUNTY	ROUTE	POST MILES TOTAL PROJECT	SHEET No.	TOTAL SHEETS
04	SM	82, 92	10.4/10.7, R11.0/R11.4	295	370

Theresa Gabriel
REGISTERED ELECTRICAL ENGINEER

October 30, 2015
PLANS APPROVAL DATE

REGISTERED PROFESSIONAL ENGINEER
Theresa Aziz Gabriel
No. E15129
Exp. 6-30-16
ELECTRICAL
STATE OF CALIFORNIA

THE STATE OF CALIFORNIA OR ITS OFFICERS OR AGENTS SHALL NOT BE RESPONSIBLE FOR THE ACCURACY OR COMPLETENESS OF SCANNED COPIES OF THIS PLAN SHEET.

TO ACCOMPANY PLANS DATED 6-28-16

NOTES:

1. See Standard Plan H10 for other details.
2. Underground electrical work done prior to foundation installation.

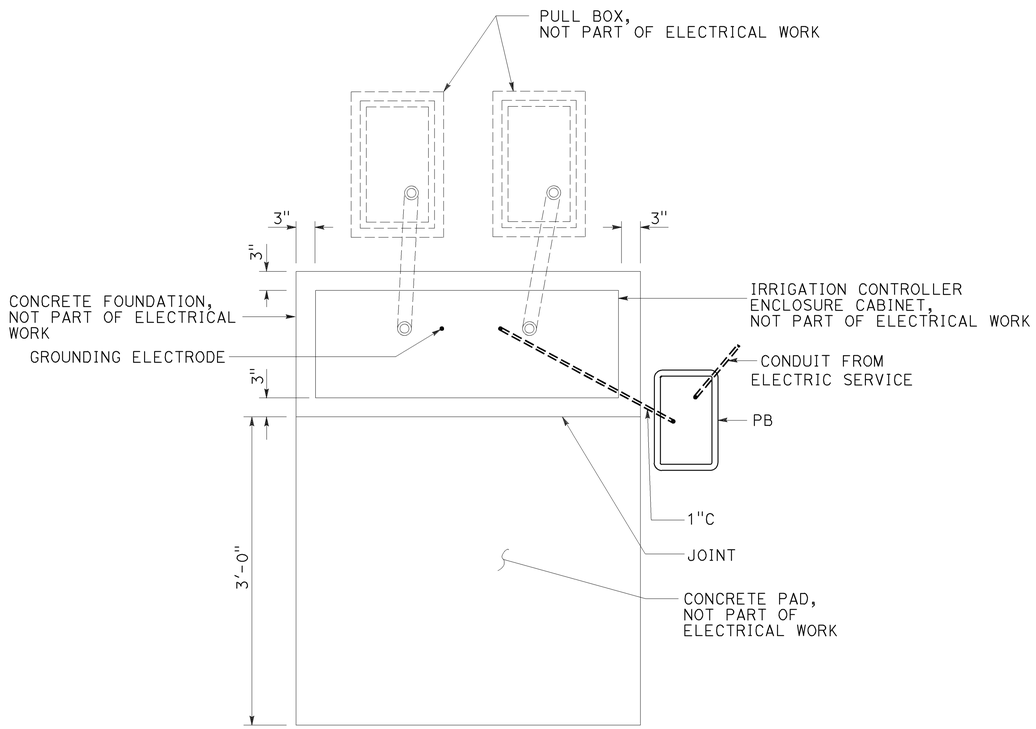

SECTION A-A

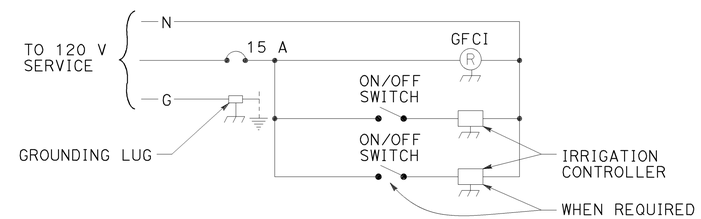

IRRIGATION CONTROLLER ENCLOSURE CABINET WIRING DIAGRAM (Typ)

DETAIL B

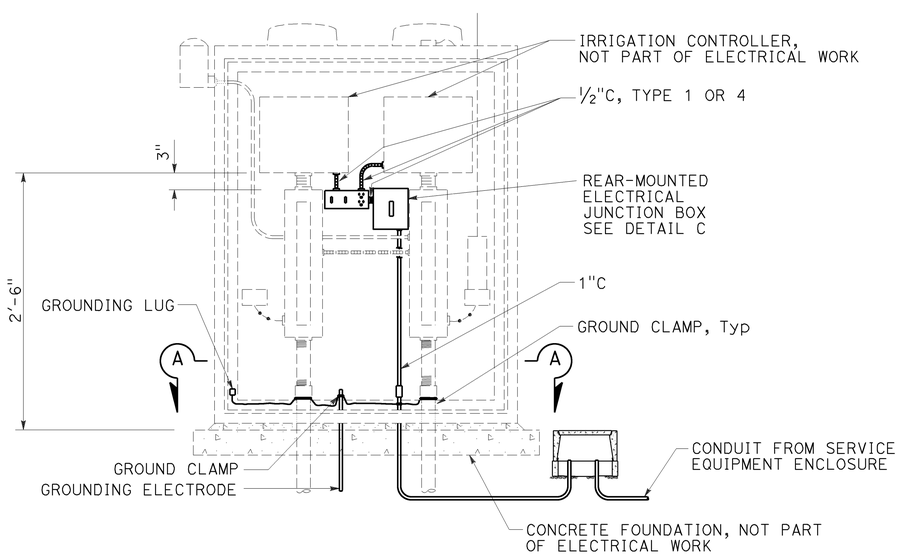

ELEVATION

DETAIL A

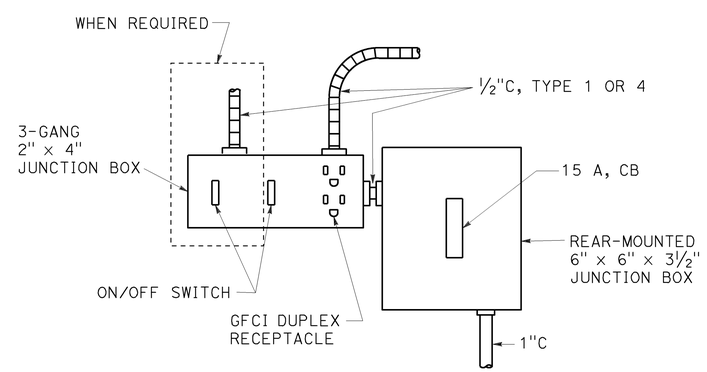

ELECTRICAL JUNCTION BOX LAYOUT

DETAIL C

STATE OF CALIFORNIA
DEPARTMENT OF TRANSPORTATION

ELECTRICAL SYSTEMS (IRRIGATION CONTROLLER ENCLOSURE CABINET)

NO SCALE

RSP ES-3H DATED OCTOBER 30, 2015 SUPERSEDES STANDARD PLAN ES-3H DATED MAY 20, 2011 - PAGE 442 OF THE STANDARD PLANS BOOK DATED 2010.

REVISED STANDARD PLAN RSP ES-3H

2010 REVISED STANDARD PLAN RSP ES-3H

8-19-15

Dist	COUNTY	ROUTE	POST MILES TOTAL PROJECT	SHEET No.	TOTAL SHEETS
04	SM	82, 92	10.4/10.7, R11.0/R11.4	296	370

Theresa Gabriel
REGISTERED ELECTRICAL ENGINEER

October 30, 2015
PLANS APPROVAL DATE

REGISTERED PROFESSIONAL ENGINEER
Theresa Aziz Gabriel
No. E15129
Exp. 6-30-16
ELECTRICAL
STATE OF CALIFORNIA

THE STATE OF CALIFORNIA OR ITS OFFICERS OR AGENTS SHALL NOT BE RESPONSIBLE FOR THE ACCURACY OR COMPLETENESS OF SCANNED COPIES OF THIS PLAN SHEET.

TO ACCOMPANY PLANS DATED 6-28-16

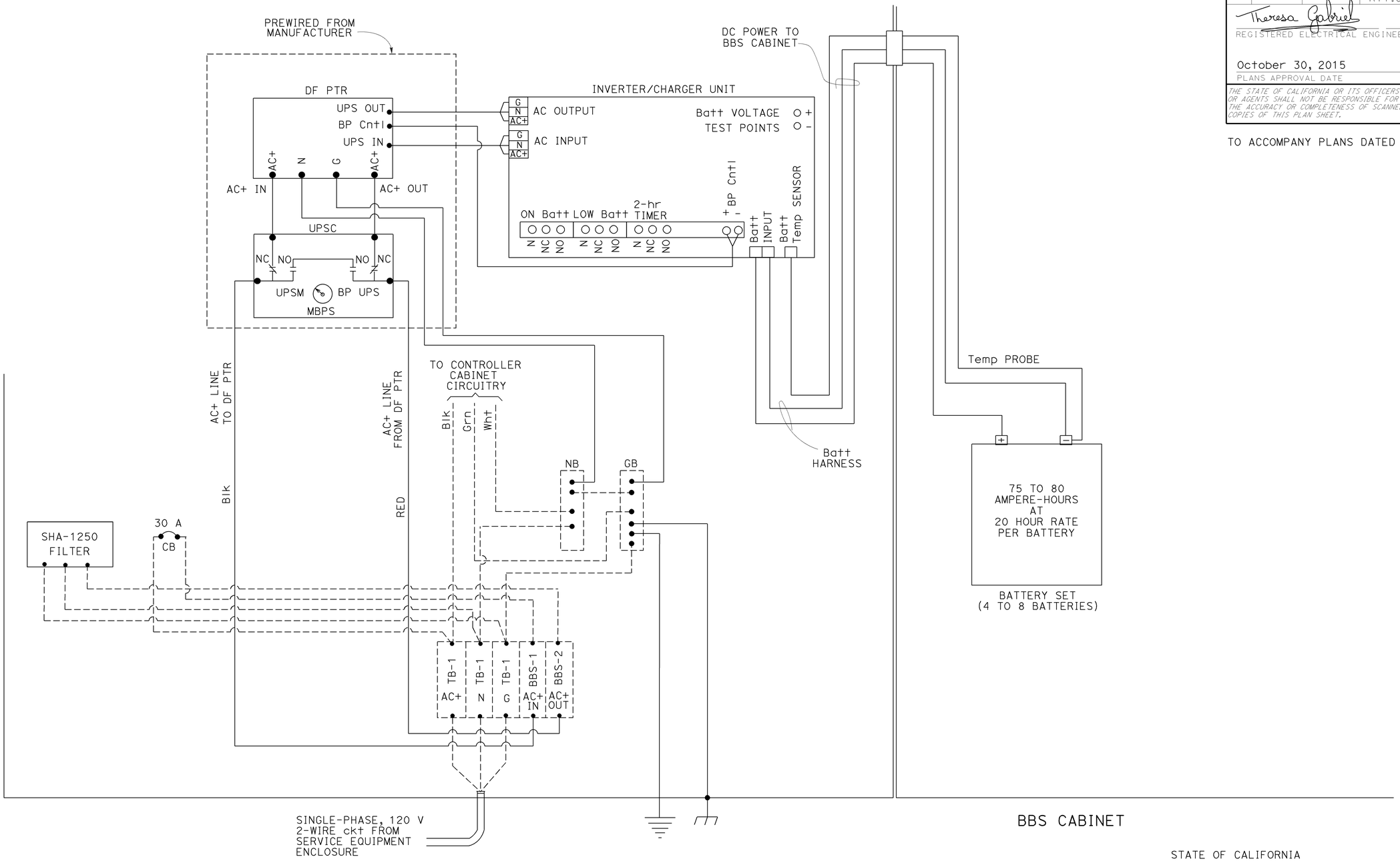

STATE OF CALIFORNIA
DEPARTMENT OF TRANSPORTATION

ELECTRICAL SYSTEMS (BBS POWER CONNECTION DIAGRAM, WITH BYPASS CONTROL LINE)

NO SCALE

RSP ES-3J DATED OCTOBER 30, 2015 THAT SUPPLEMENTS THE STANDARD PLANS BOOK DATED 2010.

REVISED STANDARD PLAN RSP ES-3J

2010 REVISED STANDARD PLAN RSP ES-3J

Dist	COUNTY	ROUTE	POST MILES TOTAL PROJECT	SHEET No.	TOTAL SHEETS
04	SM	82, 92	10.4/10.7, R11.0/R11.4	297	370

Theresa Gabriel
REGISTERED ELECTRICAL ENGINEER

April 15, 2016
PLANS APPROVAL DATE

REGISTERED PROFESSIONAL ENGINEER
Theresa Aziz Gabriel
No. E15129
Exp. 6-30-16
ELECTRICAL
STATE OF CALIFORNIA

THE STATE OF CALIFORNIA OR ITS OFFICERS OR AGENTS SHALL NOT BE RESPONSIBLE FOR THE ACCURACY OR COMPLETENESS OF SCANNED COPIES OF THIS PLAN SHEET.

TO ACCOMPANY PLANS DATED 6-28-16

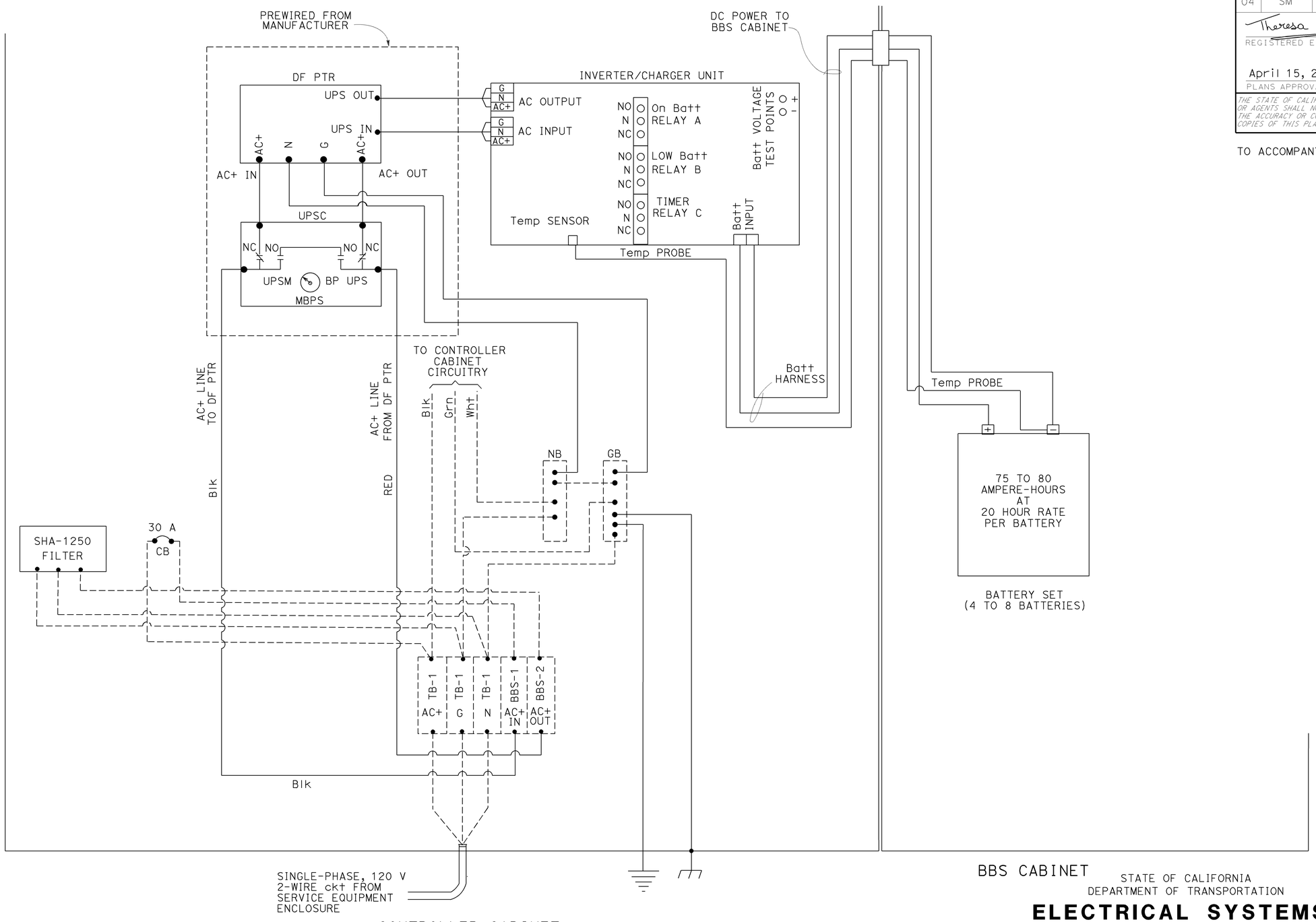

STATE OF CALIFORNIA
DEPARTMENT OF TRANSPORTATION

ELECTRICAL SYSTEMS (ELECTRONICS ASSEMBLY CONNECTION DIAGRAM, WITH BYPASS CONTROL LINE)

NO SCALE

RSP ES-3L DATED APRIL 15, 2016 SUPERSEDES RSP ES-3L DATED OCTOBER 30, 2015 THAT SUPPLEMENTS THE STANDARD PLANS BOOK DATED 2010.

REVISED STANDARD PLAN RSP ES-3L

2010 REVISED STANDARD PLAN RSP ES-3L

1-12-16

Dist	COUNTY	ROUTE	POST MILES TOTAL PROJECT	SHEET No.	TOTAL SHEETS
04	SM	82, 92	10.4/10.7, R11.0/R11.4	298	370

Theresa Gabriel
REGISTERED ELECTRICAL ENGINEER

October 30, 2015
PLANS APPROVAL DATE

REGISTERED PROFESSIONAL ENGINEER
Theresa Aziz Gabriel
No. E15129
Exp. 6-30-16
ELECTRICAL
STATE OF CALIFORNIA

THE STATE OF CALIFORNIA OR ITS OFFICERS OR AGENTS SHALL NOT BE RESPONSIBLE FOR THE ACCURACY OR COMPLETENESS OF SCANNED COPIES OF THIS PLAN SHEET.

TO ACCOMPANY PLANS DATED 6-28-16

2010 REVISED STANDARD PLAN RSP ES-4A

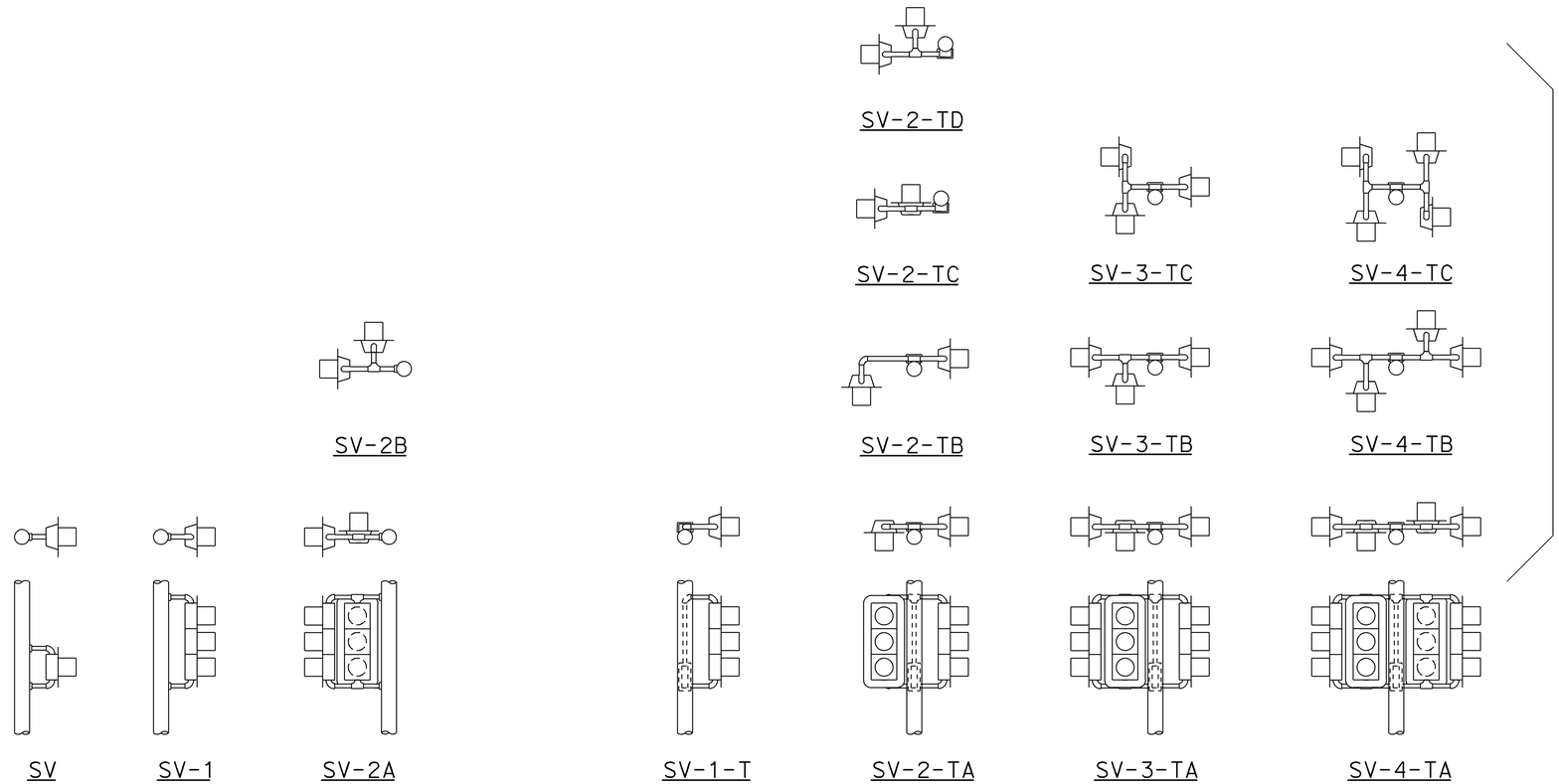

SIDE MOUNTINGS

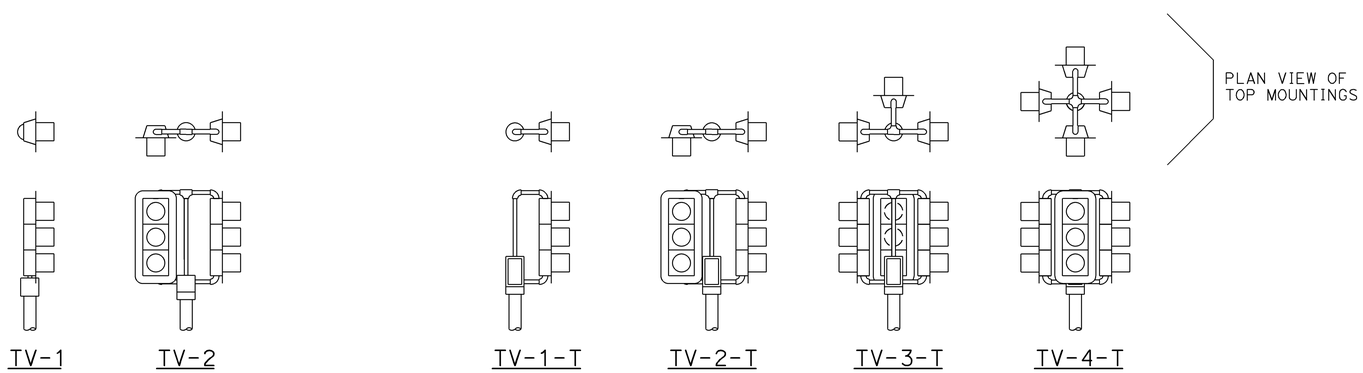

TOP MOUNTINGS

ABBREVIATIONS:

SV	SIDE MOUNTED SIGNAL HEADS
T	TERMINAL COMPARTMENT
TV	TOP MOUNTED SIGNAL HEADS
1, 2, 3, 4	NUMBER OF SIGNAL FACES (3 - SECTION, UNLESS OTHERWISE INDICATED)
A, B, C, D	CONFIGURATION OF SIGNALS

NOTES:

1. Mountings shall be oriented to provide maximum horizontal clearance to adjacent roadway.
2. Bracket arms shall be long enough to permit proper alignment of signals and backplate installation.
3. See Revised Standard Plans RSP ES-4D and RSP ES-4E for attachment fitting details.

STATE OF CALIFORNIA
DEPARTMENT OF TRANSPORTATION

ELECTRICAL SYSTEMS (SIGNAL HEADS AND MOUNTINGS)

NO SCALE

RSP ES-4A DATED OCTOBER 30, 2015 SUPERSEDES RSP ES-4A DATED JULY 19, 2013 AND STANDARD PLAN ES-4A DATED MAY 20, 2011 - PAGE 443 OF THE STANDARD PLANS BOOK DATED 2010.

REVISED STANDARD PLAN RSP ES-4A

Dist	COUNTY	ROUTE	POST MILES TOTAL PROJECT	SHEET No.	TOTAL SHEETS
04	SM	82, 92	10.4/10.7, R11.0/R11.4	299	370

Theresa Gabriel
REGISTERED ELECTRICAL ENGINEER

October 30, 2015
PLANS APPROVAL DATE

REGISTERED PROFESSIONAL ENGINEER
Theresa Aziz Gabriel
No. E15129
Exp. 6-30-16
ELECTRICAL
STATE OF CALIFORNIA

THE STATE OF CALIFORNIA OR ITS OFFICERS OR AGENTS SHALL NOT BE RESPONSIBLE FOR THE ACCURACY OR COMPLETENESS OF SCANNED COPIES OF THIS PLAN SHEET.

TO ACCOMPANY PLANS DATED 6-28-16

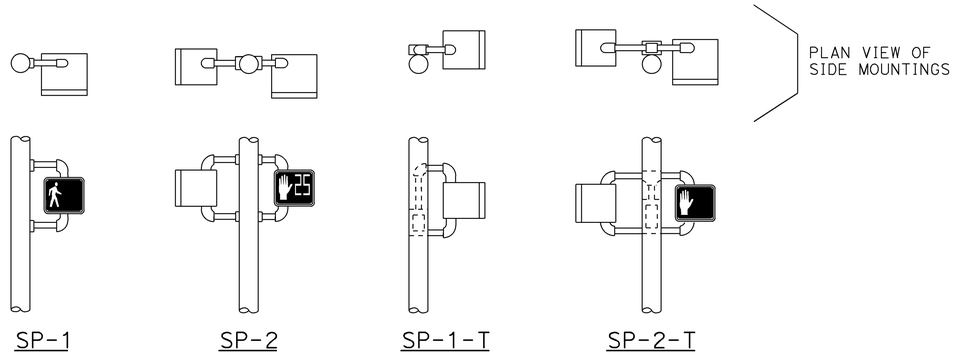

SIDE MOUNTINGS

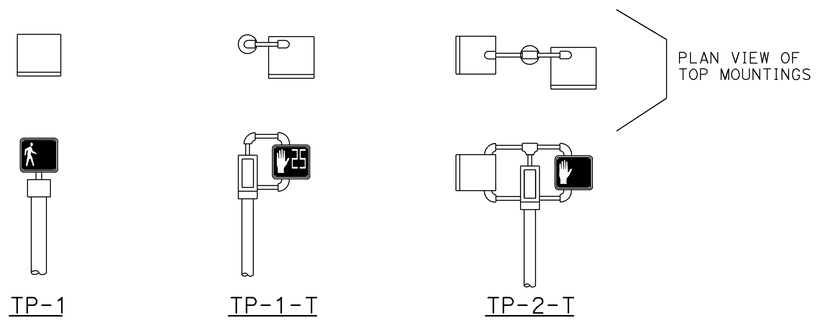

TOP MOUNTINGS

PEDESTRIAN SIGNAL HEAD MOUNTINGS

DETAIL A

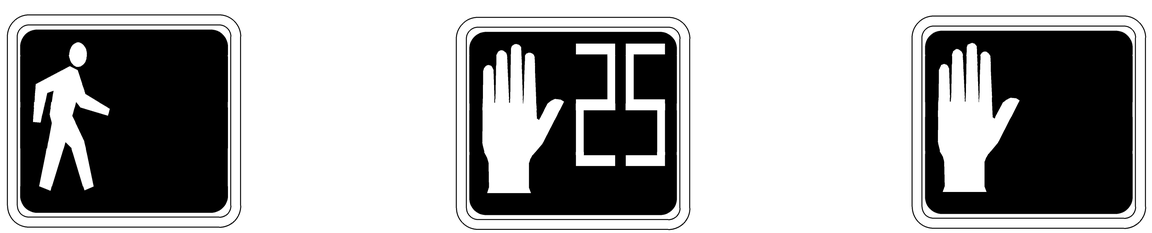

PERSON WALKING INTERVAL FLASHING UPRAISED HAND INTERVAL STEADY UPRAISED HAND INTERVAL

LED COUNTDOWN PEDESTRIAN SIGNAL FACE MODULE

DETAIL B

NOTES:

1. Mounting shall be oriented to provide maximum horizontal clearance to adjacent roadway.
2. Bracket arms shall be long enough to permit proper alignment of signals.
3. See Revised Standard Plan RSP ES-4D for attachment fittings details.

ABBREVIATIONS:

1, 2	NUMBER OF SIGNAL FACES
SP	SIDE MOUNTED PEDESTRIAN SIGNAL
T	TERMINAL COMPARTMENT
TP	TOP MOUNTED PEDESTRIAN SIGNAL

STATE OF CALIFORNIA
DEPARTMENT OF TRANSPORTATION

ELECTRICAL SYSTEMS (PEDESTRIAN SIGNAL HEADS)

NO SCALE

RSP ES-4B DATED OCTOBER 30, 2015 SUPERSEDES RSP ES-4B DATED JULY 19, 2013 AND STANDARD PLAN ES-4B DATED MAY 20, 2011 - PAGE 444 OF THE STANDARD PLANS BOOK DATED 2010.

REVISED STANDARD PLAN RSP ES-4B

2010 REVISED STANDARD PLAN RSP ES-4B

9-1-15

Dist	COUNTY	ROUTE	POST MILES TOTAL PROJECT	SHEET No.	TOTAL SHEETS
04	SM	82, 92	10.4/10.7, R11.0/R11.4	300	370

Theresa Gabriel
REGISTERED ELECTRICAL ENGINEER

October 30, 2015
PLANS APPROVAL DATE

REGISTERED PROFESSIONAL ENGINEER Theresa Aziz Gabriel No. E15129 Exp. 6-30-16 ELECTRICAL STATE OF CALIFORNIA

THE STATE OF CALIFORNIA OR ITS OFFICERS OR AGENTS SHALL NOT BE RESPONSIBLE FOR THE ACCURACY OR COMPLETENESS OF SCANNED COPIES OF THIS PLAN SHEET.

TO ACCOMPANY PLANS DATED 6-28-16

VISORS

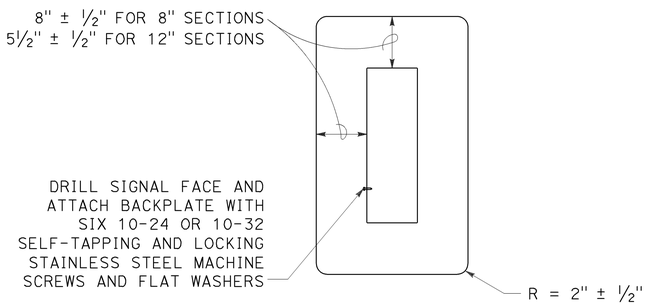

8" AND 12" SECTIONS

BACKPLATE

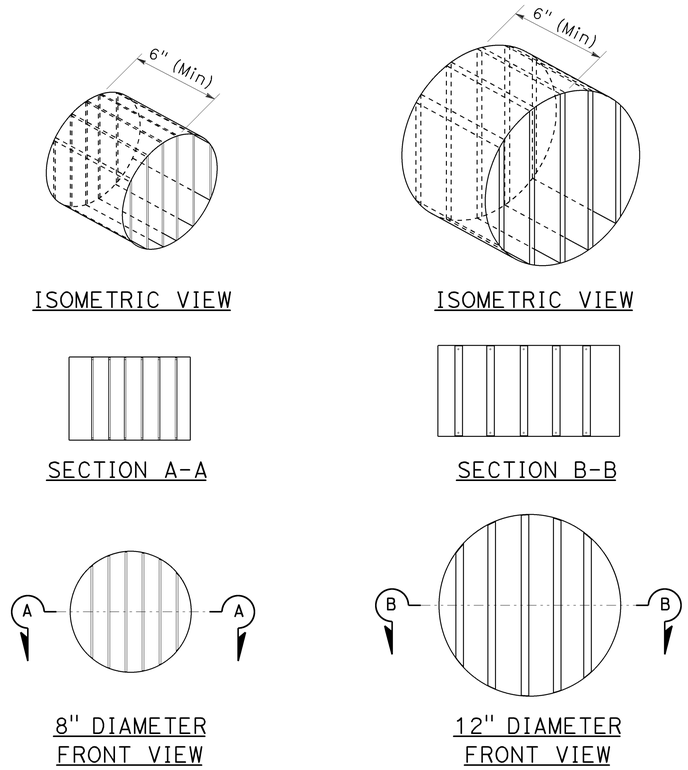

DIRECTIONAL LOUVER

Directional louvers shall be oriented and secured in place with one plated brass machine screw and nut.

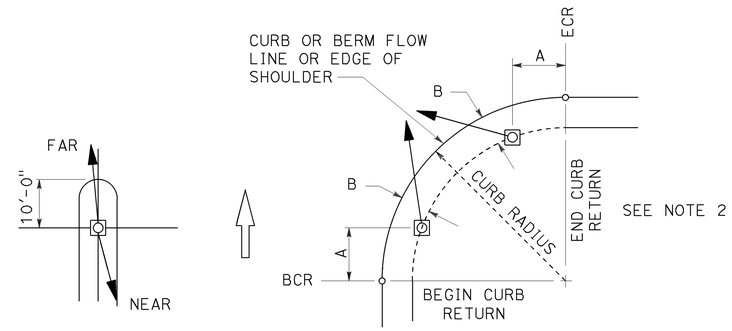

NOTES:

1. Typical signal pole placement unless dimensioned on plans.
2. For A and B dimensions, see Pole Schedule.

SIGNAL STANDARD PLACEMENT DIMENSIONS AND EQUIPMENT LOCATIONS

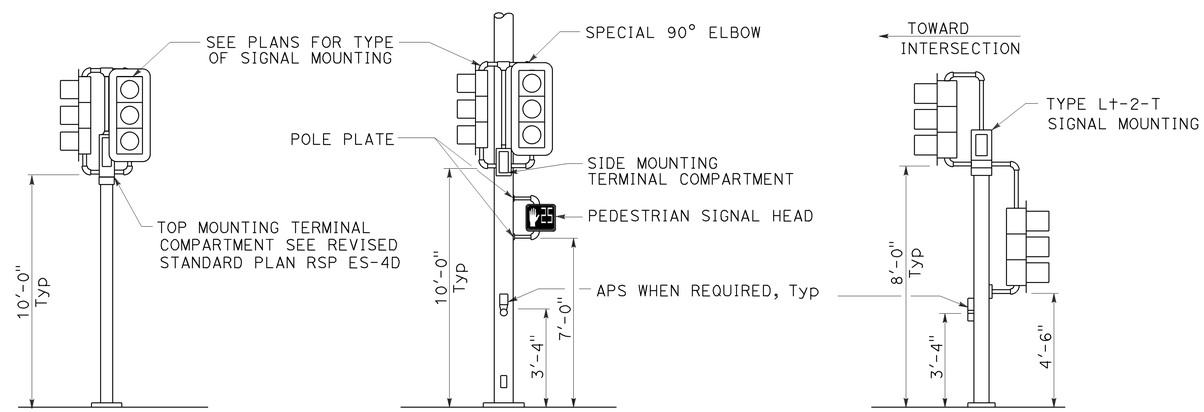

TOP MOUNTED SIGNALS (TV)
Type 1-A, 1-B, 1-C and 1-D standard as indicated on the plans

SIDE MOUNTED SIGNALS (SV AND SP)
Normally used on standards with luminaire or signal mast arm

LEFT TURN LANE SIGNAL
Type 1-A, 1-B, 1-C and 1-D standard as indicated on plans

TYPICAL SIGNAL HEAD INSTALLATIONS

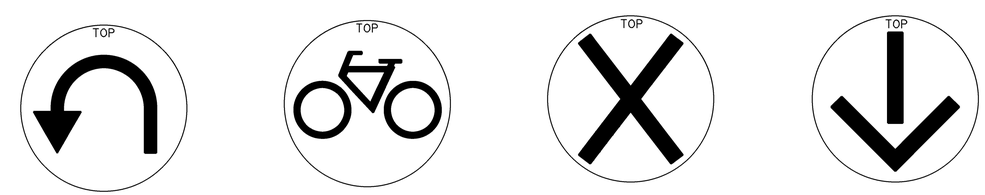

U-TURN | BICYCLE | LANE CONTROL | LANE CONTROL

SIGNAL FACES

STATE OF CALIFORNIA
DEPARTMENT OF TRANSPORTATION

ELECTRICAL SYSTEMS (SIGNAL HEADS AND MOUNTINGS)

NO SCALE

RSP ES-4C DATED OCTOBER 30, 2015 SUPERSEDES RSP ES-4C DATED JULY 19, 2013 AND STANDARD PLAN ES-4C DATED MAY 20, 2011 - PAGE 445 OF THE STANDARD PLANS BOOK DATED 2010.

REVISED STANDARD PLAN RSP ES-4C

2010 REVISED STANDARD PLAN RSP ES-4C

9-28-15