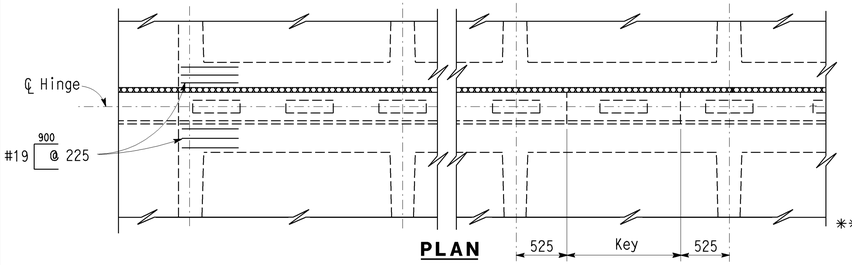

PLAN

HINGE NORMAL TO GIRDER

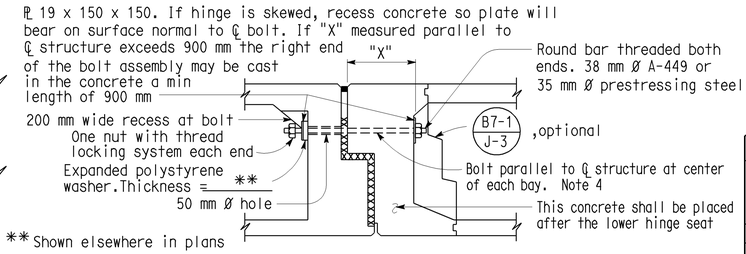

EQUALIZING BOLT DETAIL

Note: This detail not required on structure with only one hinge. Nuts, bolts and plate washers shall be painted.

EXTERIOR FACE	D
Vertical	225
Sloping	375

DESIGN LOADING DATA				
Girder Depth (mm)	Max Factored Hinge Seat Load (kN/m)		Key Size and Max Transverse Load	
	Vertical	Longitudinal	Depth	Load/Key
900	365	76 (Prorated)	150	845 kN
1200	467	92		
1500	540	108		
1800	627	127		
2100	730	147		
2400 & over	846	171		

Caltrans Metric

DIST.	COUNTY	ROUTE	KILOMETER POST TOTAL PROJECT	SHEET NO.	TOTAL SHEETS

REGISTERED ENGINEER - CIVIL

PLANS APPROVAL DATE

REGISTERED PROFESSIONAL ENGINEER No. Exp. CIVIL STATE OF CALIFORNIA

The State of California or its officers or agents shall not be responsible for the accuracy or completeness of electronic copies of this plan sheet.

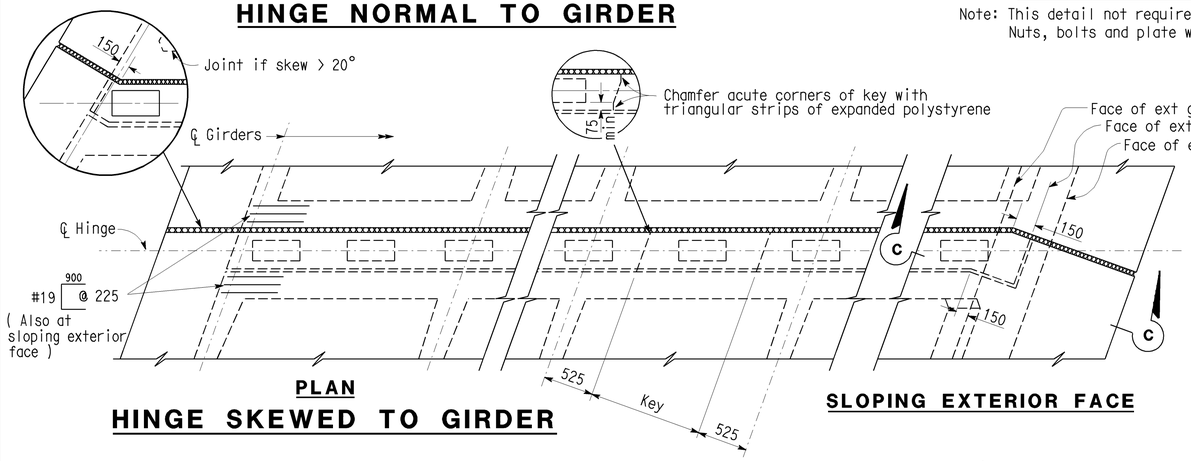

PLAN

HINGE SKEWED TO GIRDER

SLOPING EXTERIOR FACE

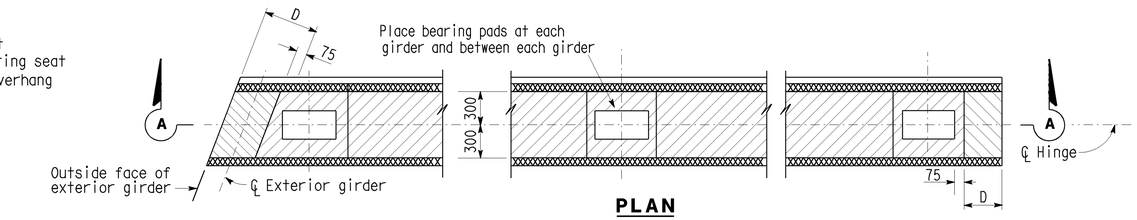

PLAN

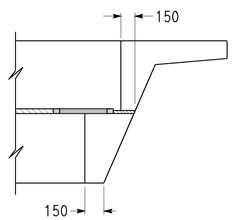

SECTION C-C

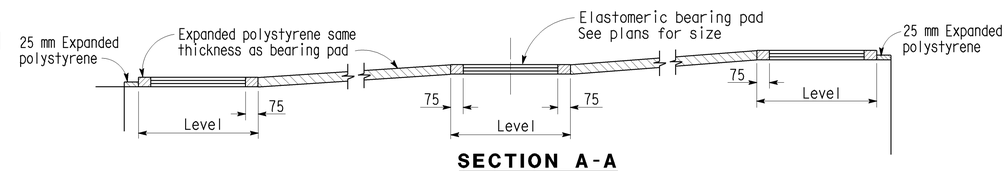

SECTION A-A

TYPICAL BEARING DETAIL

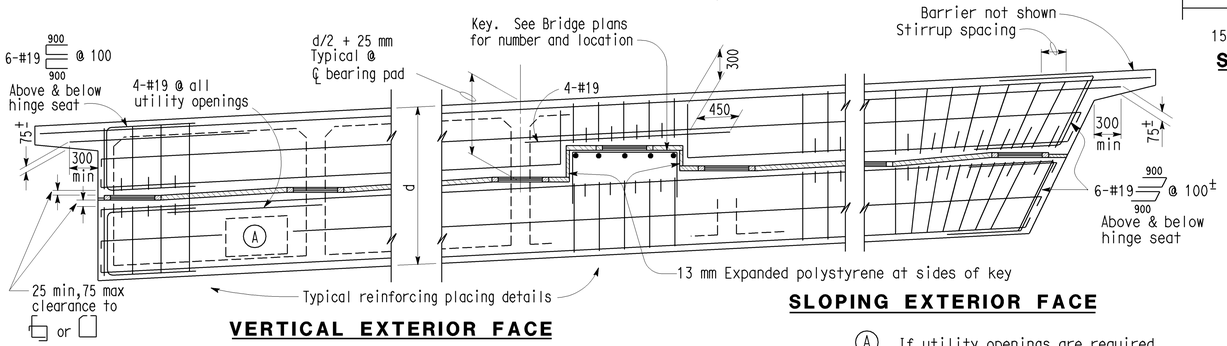

VERTICAL EXTERIOR FACE

SLOPING EXTERIOR FACE

SECTION AT ℄ HINGE

(A) If utility openings are required, locate between bearing pads

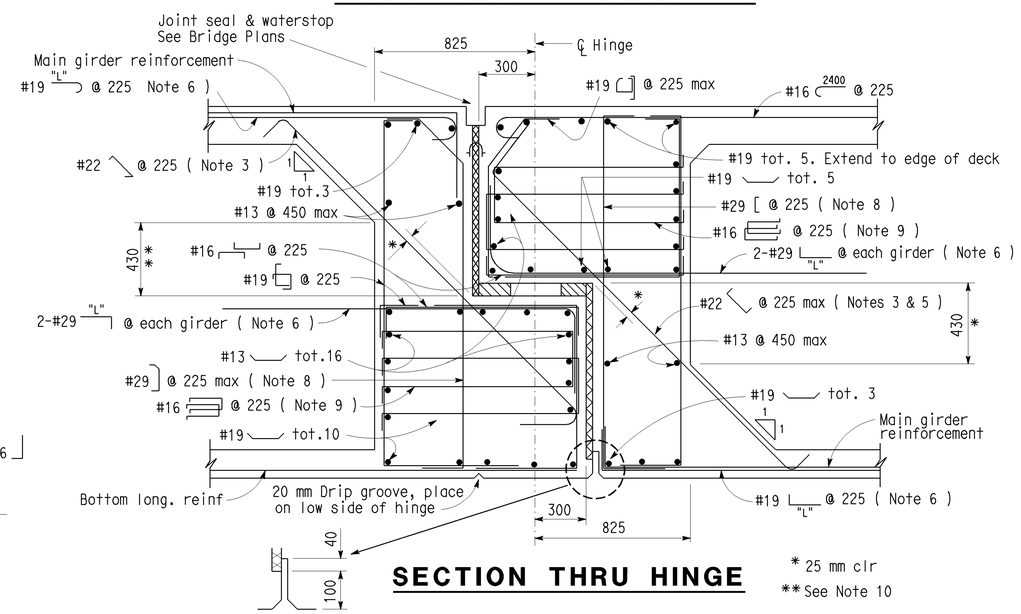

SECTION THRU HINGE

* 25 mm clr
** See Note 10

NOTES:

1. See Standard Plans (B0-13 / 13-1) & (B0-13 / 13-2)
2. To provide for free movement of the completed hinge, concrete is to be excluded from the joint by sealing all openings.
3. Bars may be placed with hooks horizontal if required for clearance.
4. When the key interferes with the placement of the equalizing bolt, place two bolts at 900 mm centers in either adjacent cell.
5. Adjust angle of bars at key to clear.
6. "L"=2400 mm when skew ≤ 20°, 3000 mm when skew > 20°.
7. Reinforcement shall be spaced along ℄ of hinge and placed parallel to ℄ structure.
8. #22 @ 225 when structure depth is less than 1829 mm.
9. #16 @ 225 when structure depth is less than 1829 mm.
10. When girder depth is less than 1500 mm± reduce dimension as required to provide 100 mm min fillet.

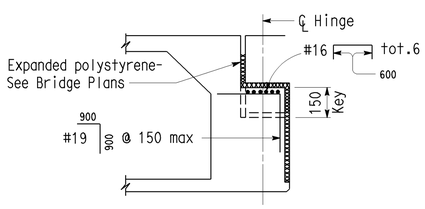

SECTION B-B

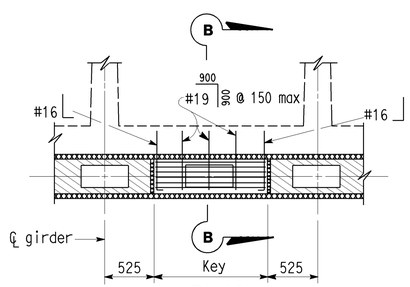

PLAN

KEY DETAIL

NO SCALE
ALL DIMENSIONS ARE IN MILLIMETERS UNLESS OTHERWISE SHOWN

STANDARD DRAWING					
RELEASE DATE 12/22/92	DESIGN	BY A.C. STANCIK	CHECKED A.D. DEETER	RELEASED BY	
FILE NO. xs1-020	DETAILS	BY R. YEE	CHECKED A.D. DEETER		
	SUBMITTED	BY M.B. O'GARA	DRAWING DATE 5/86	OFFICE CHIEF	

STATE OF CALIFORNIA DEPARTMENT OF TRANSPORTATION

DIVISION OF ENGINEERING SERVICES

BRIDGE NO.

KILOMETER POST

BOX GIRDER 610 mm HINGE - ELASTOMERIC

DS OSD 2147A (METRIC) (REV. 2/25/97)

ORIGINAL SCALE IN MILLIMETERS FOR REDUCED PLANS 0 10 20 30 40 50 60 70 80 90 100

CU
EA

DISREGARD PRINTS BEARING EARLIER REVISION DATES

REVISION DATES (PRELIMINARY STAGE ONLY) SHEET OF

USERNAME => jsanchez

xs1-020.dgn

DATE PLOTTED => 16-JAN-2004 TIME PLOTTED => 14:30