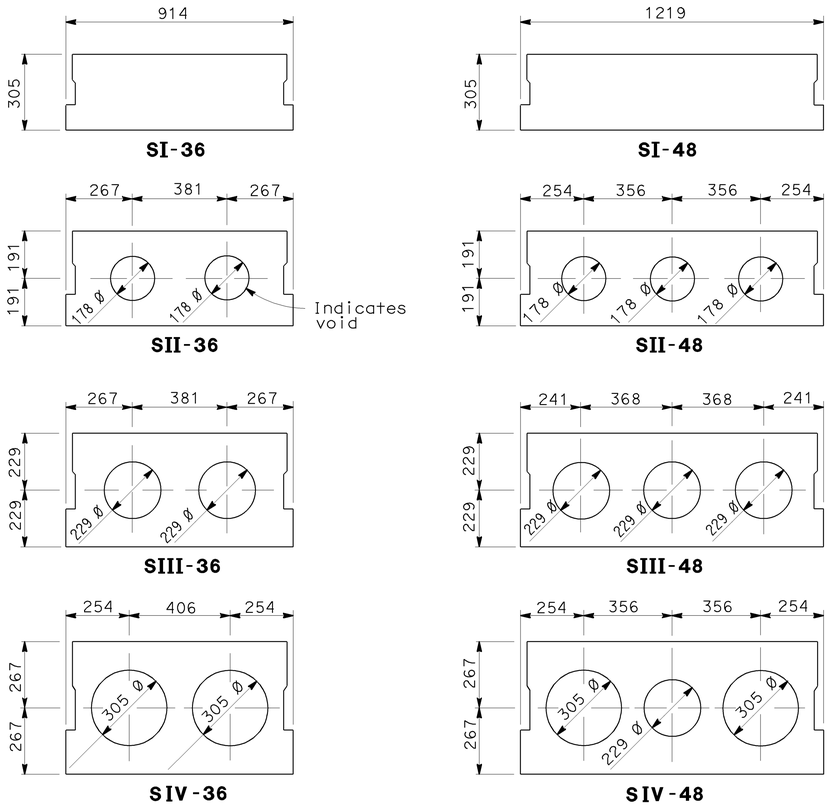


## TYPICAL SECTIONS

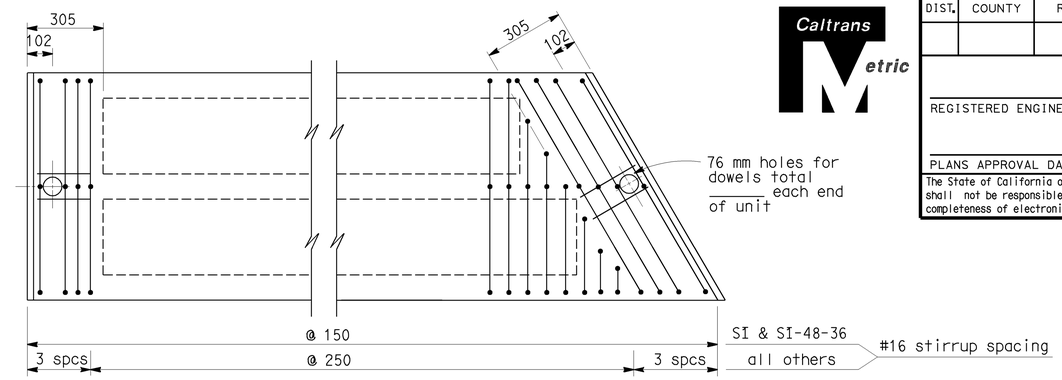


## PLAN

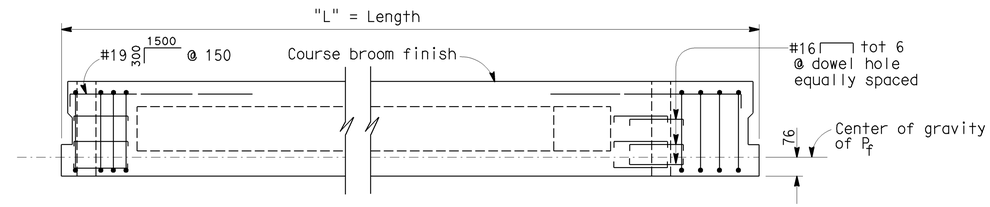


## ELEVATION

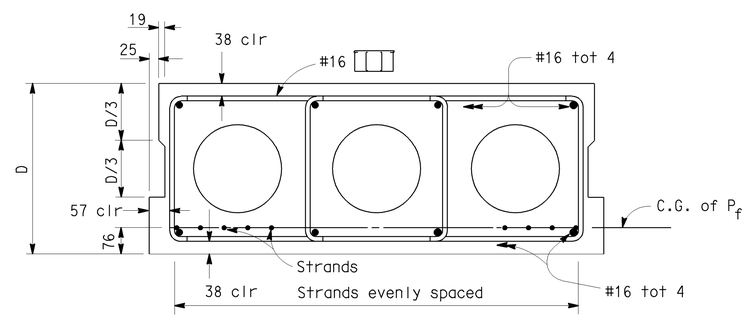


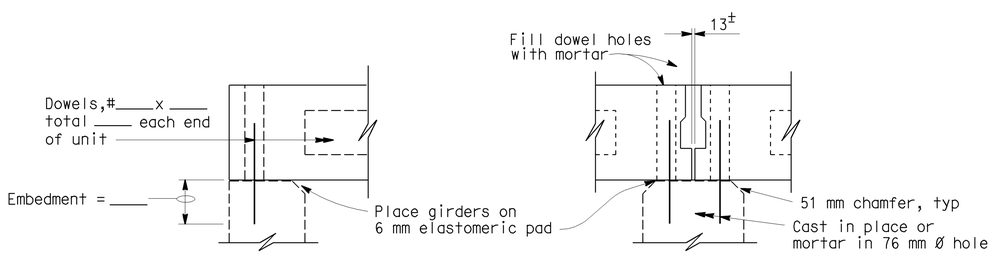


**AT ABUTMENTS** **AT INTERMEDIATE SUPPORTS**

## SUPPORT DETAILS

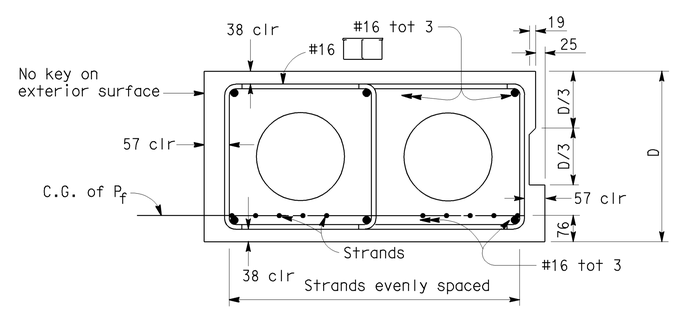


## TYPICAL REINFORCEMENT

**GENERAL NOTES:**

1. $P_f$ is the force required at center of span after all losses.
2. Slabs designed for pretensioning.
3. Concrete strength at time of stressing 28 MPa $f'_c$ -28 MPa at 28 days
4. Live loading = HS 20-44,Alternative and permit design load.
5. Design 1675 N/m$^2$ for surfacing.
6. Keyways to be filled with mortar.
7. See other sheets for railing requirements.

| LOCATION OR LENGTH | TYPICAL SECTION | $P_f$ = WORKING FORCE IN kN | NO. OF STRANDS |
|---|---|---|---|
| | | | |

**NO SCALE**
ALL DIMENSIONS ARE IN MILLIMETERS UNLESS OTHERWISE SHOWN

| DIST. | COUNTY | ROUTE | KILOMETER POST TOTAL PROJECT | SHEET NO. | TOTAL SHEETS |
|---|---|---|---|---|---|
| | | | | | |

Caltrans Metric

REGISTERED ENGINEER - CIVIL

PLANS APPROVAL DATE

REGISTERED PROFESSIONAL ENGINEER No. Exp. CIVIL STATE OF CALIFORNIA

The State of California or its officers or agents shall not be responsible for the accuracy or completeness of electronic copies of this plan sheet.

STANDARD DRAWING

| RELEASE DATE 10/14/97 | DESIGN BY S. BOLL | CHECKED C. TAM | RELEASED BY |
|---|---|---|---|
| | DETAILS BY R. YEE | CHECKED C. TAM | |
| FILE NO. xs1-110 | SUBMITTED BY BILL JONES | DRAWING DATE 11/84 | OFFICE CHIEF |

STATE OF CALIFORNIA
DEPARTMENT OF TRANSPORTATION

DIVISION OF ENGINEERING SERVICES

BRIDGE NO.
KILOMETER POST

# PRESTRESSED CONCRETE SLABS

DS OSD 2147A (METRIC) (REV. 2/25/97)

ORIGINAL SCALE IN MILLIMETERS FOR REDUCED PLANS 0 10 20 30 40 50 60 70 80 90 100

CU
EA

DISREGARD PRINTS BEARING EARLIER REVISION DATES

REVISION DATES (PRELIMINARY STAGE ONLY) SHEET OF

USERNAME => jsanchez

xs1-110.dgn

DATE PLOTTED => 16-JAN-2004 TIME PLOTTED => 14:31