DIST.	COUNTY	ROUTE	KILOMETER POST TOTAL PROJECT	SHEET NO.	TOTAL SHEETS

Caltrans Metric

REGISTERED ENGINEER - CIVIL

PLANS APPROVAL DATE

REGISTERED PROFESSIONAL ENGINEER No. Exp. CIVIL STATE OF CALIFORNIA

The State of California or its officers or agents shall not be responsible for the accuracy or completeness of electronic copies of this plan sheet.

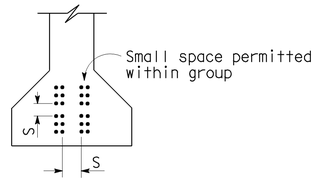

CLEARANCES FOR PRETENSIONED STRANDS

1. Strands may be bundled in groups consisting of 3 vertically 2 horizontally, and separated at the ends.
2. The min distance "S" between groups or individual strands is 40 mm for 9.5 mm strands, 45 mm for 11 and 13 mm strands and 50 mm for 15 mm strands.
3. "S" is measured between centers of adjacent strands.
4. Approval of Engineer is required for deviation.

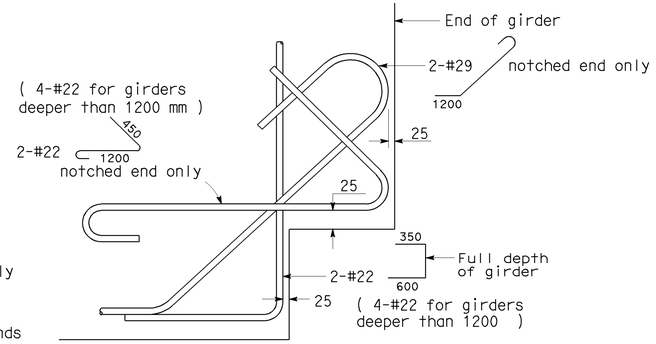

DETAIL E

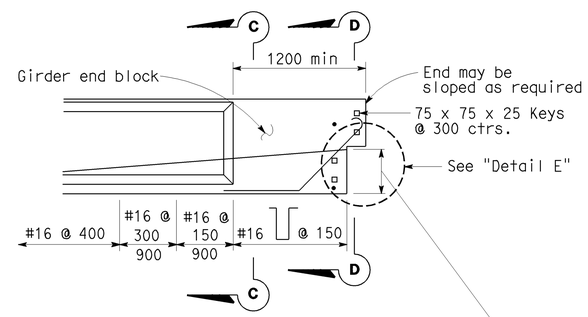

NOTCHED END

PRESTRESSING NOTES

Working force : The force required at center of span after all losses.
Concrete strength : f'_{ci} is at time of initial stressing,
f'_c is at 28 days, MPa.
Deflection components : Informational - to be used in setting screed line elevations.

Screed line elevations for deck concrete will be determined by the Engineer.

Contractor may interpolate "P" and "X" values between limits shown, as approved by the Engineer.

Girder location or designation and length	P = Working force in (kN)		Concrete Strength		Deflection Components (mm)	
	"X"		f'_{ci}	f'_c	① Deck DL	② Rail DL

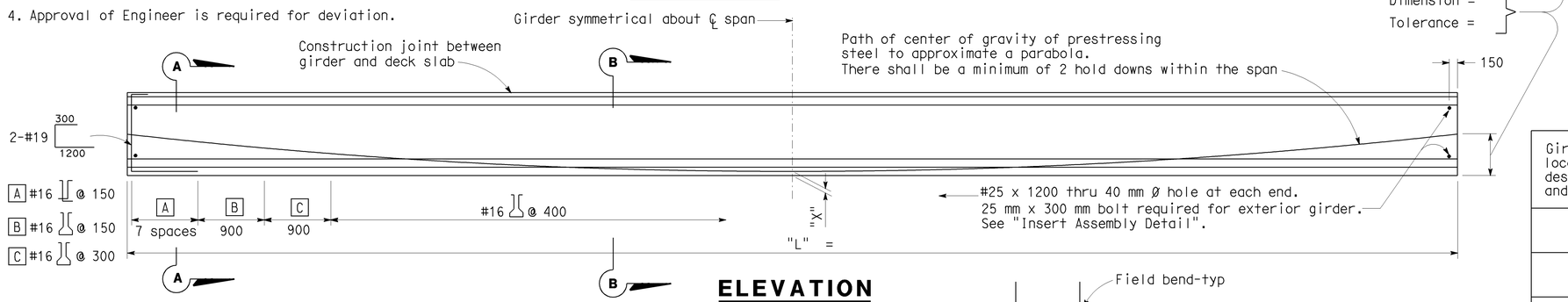

ELEVATION

Note :

Details shown are for pretensioned girders. The Contractor may submit details for post-tensioning which shall meet the approval of the Engineer.

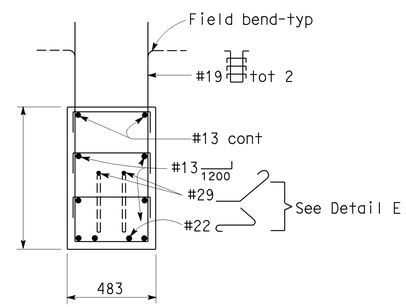

SECTION D-D

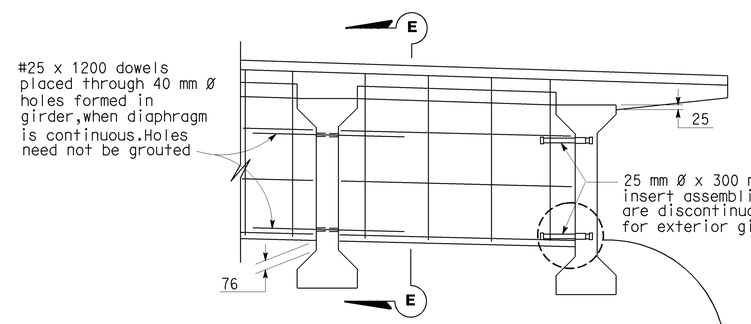

INTERMEDIATE DIAPHRAGM

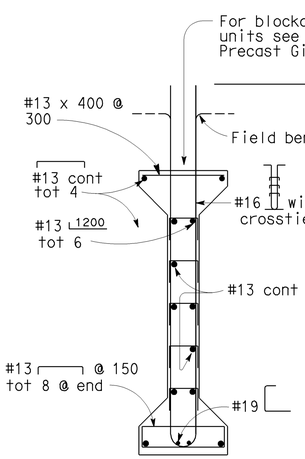

SECTION A-A

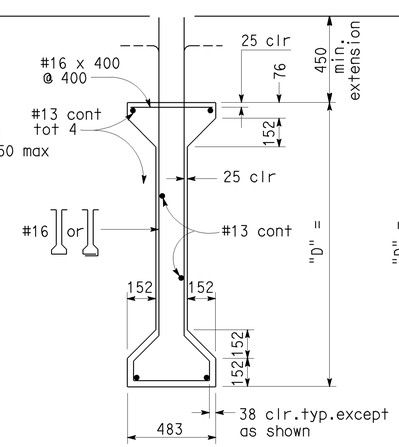

SECTION B-B

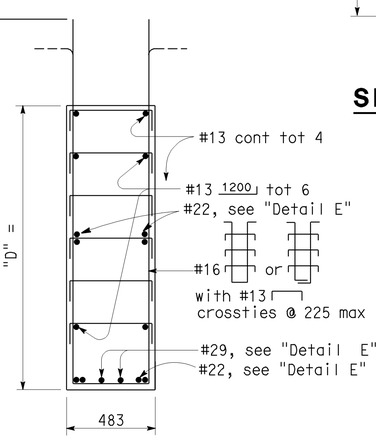

SECTION C-C

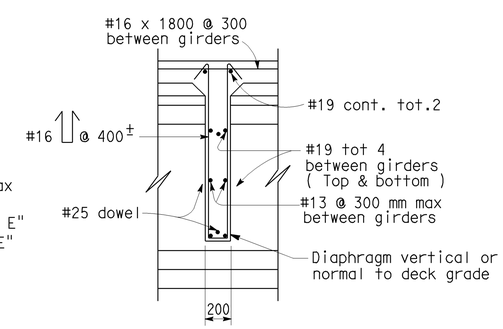

SECTION E-E

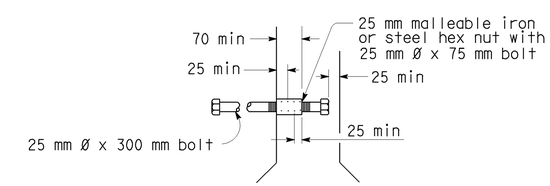

INSERT ASSEMBLY

NO SCALE

ALL DIMENSIONS ARE IN MILLIMETERS UNLESS OTHERWISE SHOWN

STANDARD DRAWING					
RELEASE DATE 7/26/99	DESIGN	BY ROBERT K. DOWELL	CHECKED A.W. DEETER	RELEASED BY Shannon L. Rock	
FILE NO. xs1-120	DETAILS	BY R. YEE	CHECKED A.W. DEETER		
	SUBMITTED	BY ALVIN W. DEETER	DRAWING DATE 4/98	OFFICE CHIEF	

STATE OF CALIFORNIA DEPARTMENT OF TRANSPORTATION

DIVISION OF ENGINEERING SERVICES

BRIDGE NO.

KILOMETER POST

PRESTRESSED I GIRDER

DS OSD 2147A (METRIC) (REV. 2/25/97)

ORIGINAL SCALE IN MILLIMETERS FOR REDUCED PLANS 0 10 20 30 40 50 60 70 80 90 100

CU
EA

DISREGARD PRINTS BEARING EARLIER REVISION DATES

REVISION DATES (PRELIMINARY STAGE ONLY) SHEET OF

USERNAME => jsanchez

xs1-120.dgn

DATE PLOTTED => 16-JAN-2004 TIME PLOTTED => 14:31