DIST.	COUNTY	ROUTE	KILOMETER POST TOTAL PROJECT	SHEET NO.	TOTAL SHEETS

Caltrans Metric

REGISTERED ENGINEER - CIVIL

PLANS APPROVAL DATE

REGISTERED PROFESSIONAL ENGINEER No. Exp. CIVIL STATE OF CALIFORNIA

The State of California or its officers or agents shall not be responsible for the accuracy or completeness of electronic copies of this plan sheet.

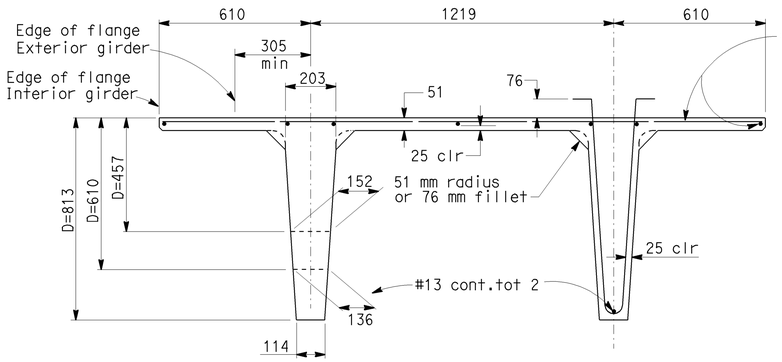

TYPE A

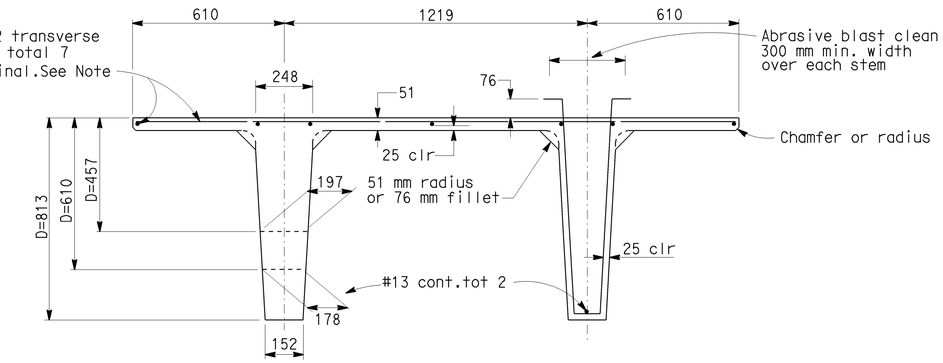

TYPE B

TYPICAL SECTIONS

Note: For girders with 20° or less skew,the Contractor may substitute welded wire fabric of equivalent area for the girder flange reinforcement. Stem dimensions may vary ±6 mm

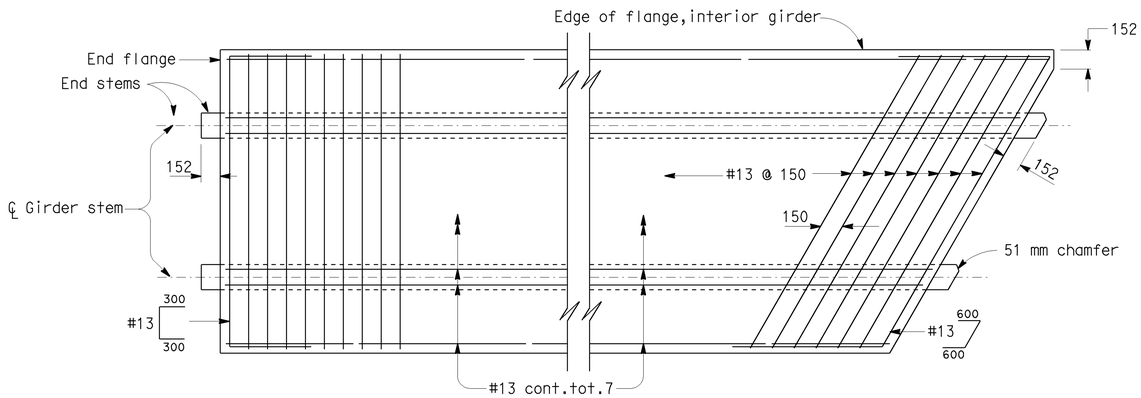

NORMAL END **SKEWED END**

PLAN

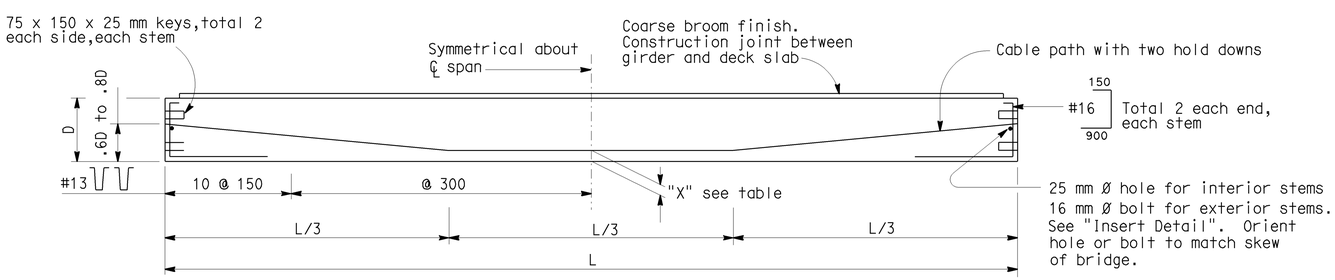

ELEVATION

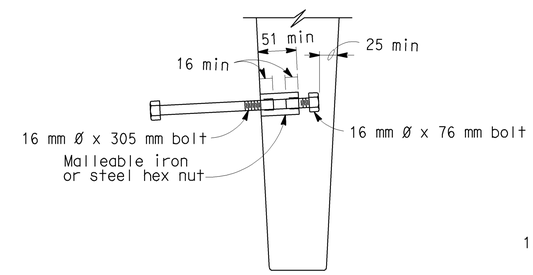

INSERT DETAIL

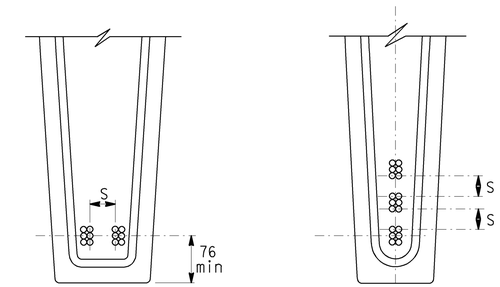

CLEARANCES FOR STRANDS

1. Strands may be bundled in groups consisting of 3 vertically and 2 horizontally and separated at the ends.
2. The minimum distance "S" between groups or individual strands 38 mm for 9.5 mm strands,44 mm for 11 mm strands and 51 mm for 13 mm strands.
3. "S" is measured between centers of adjacent strands.
4. Approval of the Engineer is required for deviation.

GIRDER DEPTH D	GIRDER LOCATION OR DESIGNATION (LENGTH)	P = WORKING FORCE, kN			CONCRETE STRENGTH		DEFLECTION AT ℄ SPAN DUE TO CIP SLAB	GIRDER CAMBER @ ℄ SPAN
		"X"	TYPE A	TYPE B	TYPE A	TYPE B		

PRESTRESSING NOTES

Working force: The force required at center of span after all losses.
Concrete strength: f'_{ci} is at time of initial stressing: f'_c is at 28 days.
Girders designed for pretensioning.
Type A or Type B girder may be used at contractors option.
Screed line elevations for deck concrete will be determined by the Engineer.
Contractor may interpolate "P" and "X" values between limits shown, as approved by the Engineer.

ALL DIMENSIONS ARE IN MILLIMETERS UNLESS OTHERWISE SHOWN

NO SCALE

STANDARD DRAWING

RELEASE DATE 10/14/97	DESIGN BY E.N. BRUNBERG	CHECKED R.A.D.	RELEASED BY Shannon L. Root
FILE NO. xs1-130	DETAILS BY R. YEE	CHECKED R.A.D.	OFFICE CHIEF
	SUBMITTED BY R.A. DOKKEN	DRAWING DATE 6/84	

DS OSD 2147A (METRIC) (REV. 2/25/97)

STATE OF CALIFORNIA DEPARTMENT OF TRANSPORTATION

DIVISION OF ENGINEERING SERVICES

BRIDGE NO.

KILOMETER POST

PRESTRESSED DOUBLE T GIRDER

ORIGINAL SCALE IN MILLIMETERS FOR REDUCED PLANS 0 10 20 30 40 50 60 70 80 90 100

CU
EA

DISREGARD PRINTS BEARING EARLIER REVISION DATES

REVISION DATES (PRELIMINARY STAGE ONLY) SHEET OF

USERNAME => jsanchez

xs1-130.dgn

DATE PLOTTED => 16-JAN-2004 TIME PLOTTED => 14:32