DIST.	COUNTY	ROUTE	KILOMETER POST TOTAL PROJECT	SHEET NO.	TOTAL SHEETS

Caltrans Metric

REGISTERED ENGINEER - CIVIL

PLANS APPROVAL DATE

REGISTERED PROFESSIONAL ENGINEER No. Exp. CIVIL STATE OF CALIFORNIA

The State of California or its officers or agents shall not be responsible for the accuracy or completeness of electronic copies of this plan sheet.

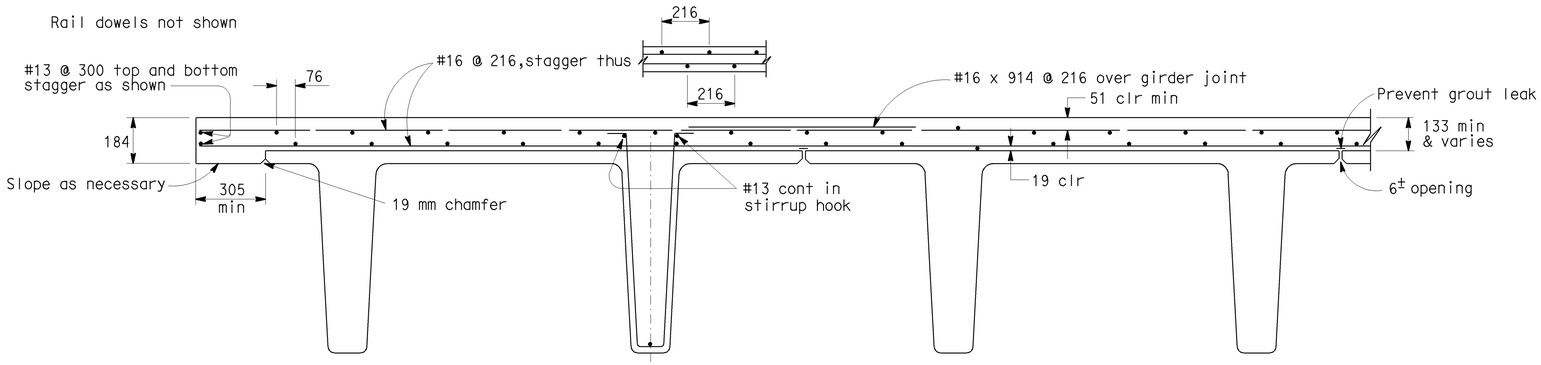

TYPICAL SLAB REINFORCEMENT

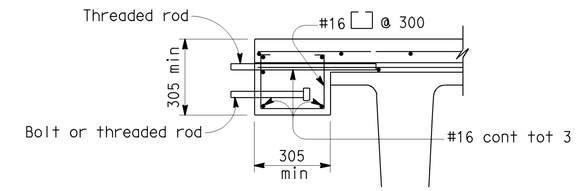

EDGE OF DECK DETAIL FOR BOLTED ON RAIL

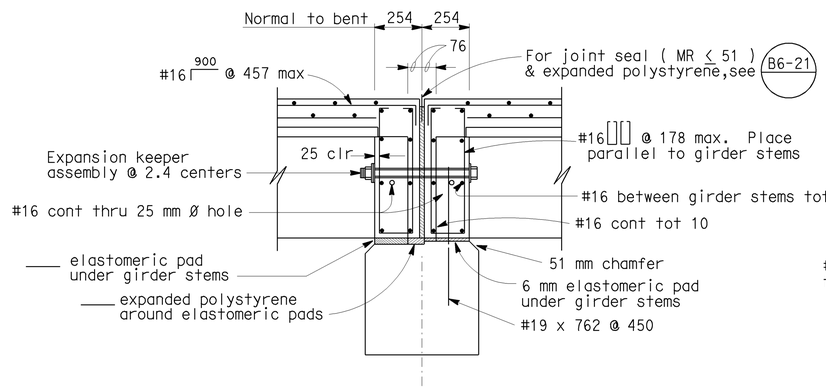

EXPANSION FIXED

EXPANSION BENT

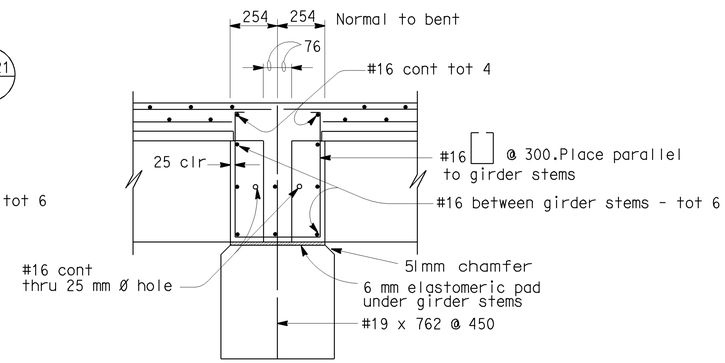

FIXED BENT

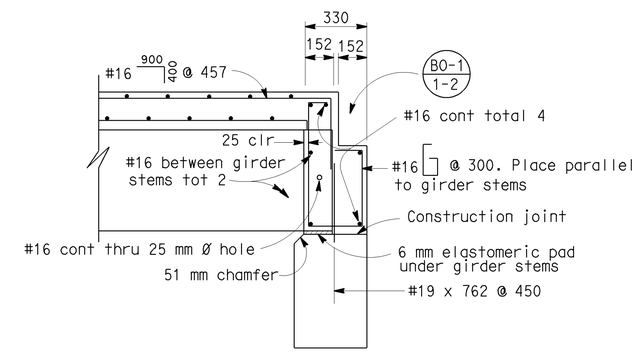

END DIAPHRAGM AT ABUTMENT

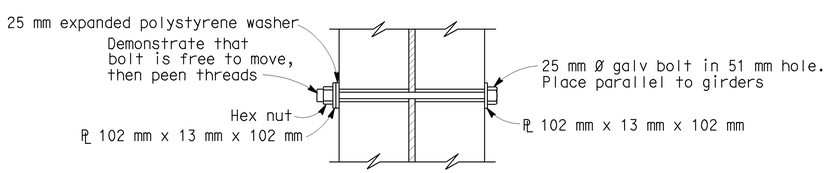

NORMAL

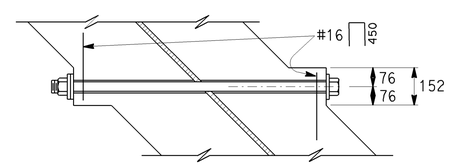

SKEWED

EXPANSION KEEPER ASSEMBLY

NO SCALE

ALL DIMENSIONS ARE IN MILLIMETERS UNLESS OTHERWISE SHOWN

Live loading HS 20-44 and Alternative

STANDARD DRAWING					
RELEASE DATE 10/14/97	DESIGN	BY E. BRUNBRG	CHECKED R.A.D.	RELEASED BY	
FILE NO. xs1-140	DETAILS	BY R. YEE	CHECKED R.A.D.		
	SUBMITTED	BY R.A. DOKKEN	DRAWING DATE 12/76	OFFICE CHIEF	

STATE OF CALIFORNIA DEPARTMENT OF TRANSPORTATION

DIVISION OF ENGINEERING SERVICES

BRIDGE NO.

KILOMETER POST

PRESTRESSED DOUBLE T GIRDER DETAILS

DS OSD 2147A (METRIC) (REV. 2/25/97)

ORIGINAL SCALE IN MILLIMETERS FOR REDUCED PLANS 0 10 20 30 40 50 60 70 80 90 100

CU EA

DISREGARD PRINTS BEARING EARLIER REVISION DATES

REVISION DATES (PRELIMINARY STAGE ONLY) SHEET OF

USERNAME => jsanchez

xs1-140.dgn

DATE PLOTTED => 16-JAN-2004 TIME PLOTTED => 14:32