DIST.	COUNTY	ROUTE	KILOMETER POST TOTAL PROJECT	SHEET NO.	TOTAL SHEETS

REGISTERED ENGINEER - CIVIL

PLANS APPROVAL DATE

REGISTERED PROFESSIONAL ENGINEER No. Exp. CIVIL STATE OF CALIFORNIA

The State of California or its officers or agents shall not be responsible for the accuracy or completeness of electronic copies of this plan sheet.

Caltrans Metric

EXTERIOR FACE	D
VERTICAL	225
SLOPING	375

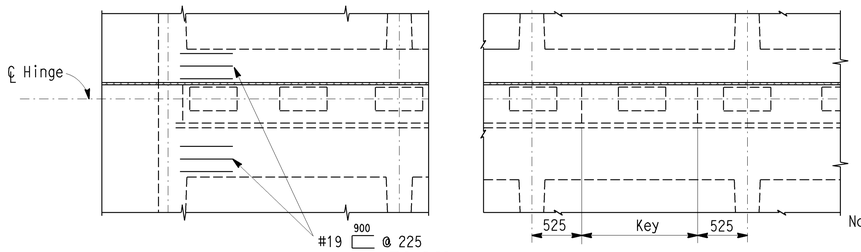

PLAN

HINGE NORMAL TO GIRDER

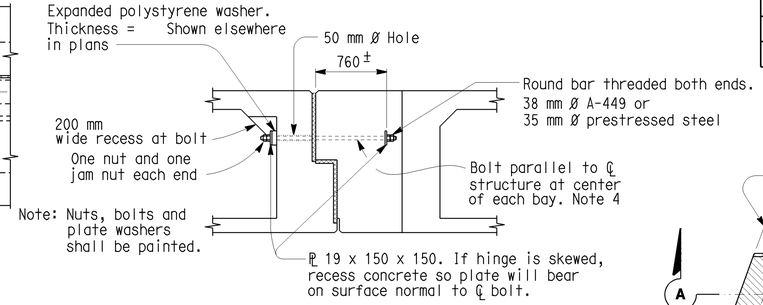

EQUALIZING BOLT DETAIL

This detail not required on structures with only one hinge

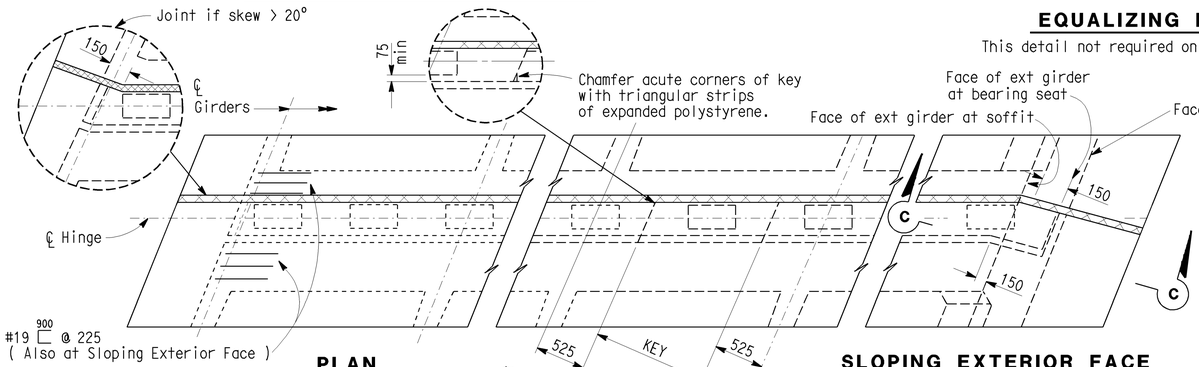

PLAN

HINGE SKEWED TO GIRDER

SLOPING EXTERIOR FACE

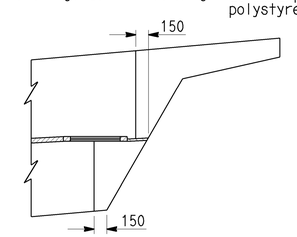

SECTION C-C

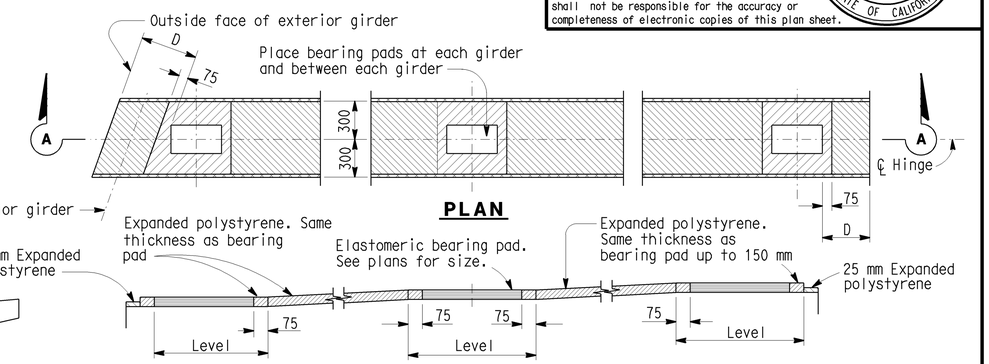

PLAN

SECTION A-A

TYPICAL BEARING DETAIL

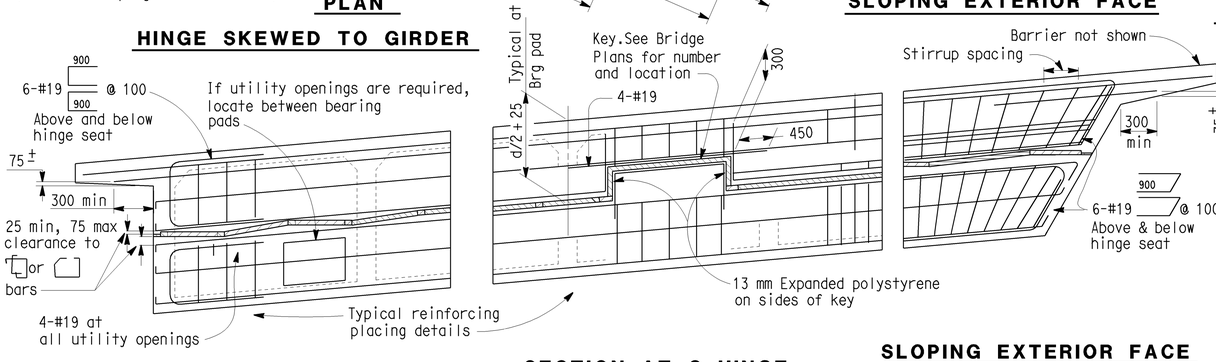

VERTICAL EXTERIOR FACE

SLOPING EXTERIOR FACE

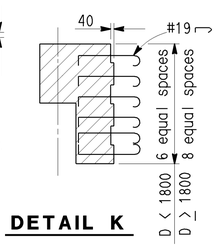

DETAIL K

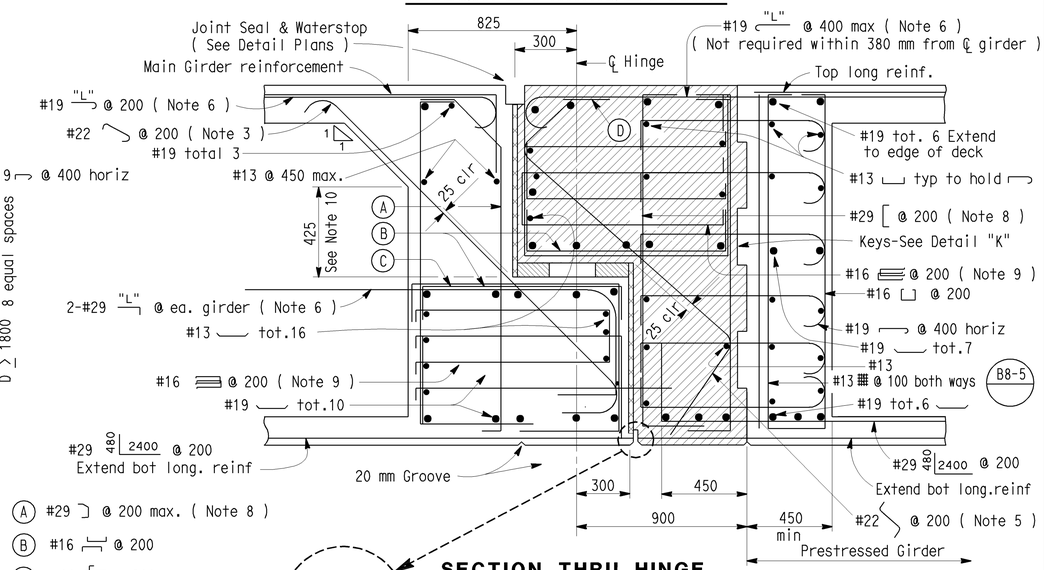

SECTION THRU HINGE

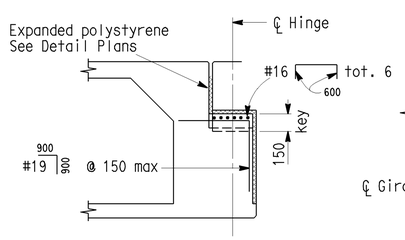

SECTION B-B

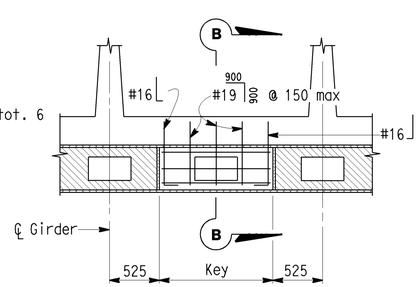

PLAN

KEY DETAIL

SECTION AT ℄ HINGE

NOTES:

1. See Bridge Details BO-13 / 13-1 & BO-13 / 13-2
2. To provide for free movement of the completed hinge, concrete is to be excluded from the joint by sealing all openings.
3. Bars may be placed with hooks horizontal if required for clearance.
4. When the key interferes with the placement of the equalizing bolt, place two bolts at 900 mm centers in either adjacent cell.
5. Adjust angle of bars at key to clear.
6. "L" = 2400 mm when skew ≤ 20°, 3000 mm when skew > 20°.
7. Reinforcement shall be spaced along ℄ of hinge and placed parallel to ℄ structure.
8. #22 @ 200 when structure depth is less than 1800.
9. #16 @ 200 when structure depth is less than 1800.
10. When girder depth is less than 1500 ± reduce dimension as required to provide 100 mm min fillet.

Indicates cast-in-place concrete to be placed after supporting side of hinge is constructed and bearing pads are properly positioned. Concrete to be same strength grade as cast-in-place prestressed concrete. Falsework shall remain in place until concrete has attained a strength of at least 20.68 MPa.

DESIGN LOADING DATA

GIRDER DEPTH	Max. Factored Hinge Seat Load (kN/m)		Key Size and Max Tranverse Load	
	VERTICAL	LONGITUDINAL	DEPTH	LOAD/KEY
900	365	88 (Prorated)	150	845 kN
1200	555	112		
1500	686	139		
1800	832	166		
2100	1007	201		
2400 & OVER	1211	242		

NO SCALE

ALL DIMENSIONS ARE IN MILLIMETERS UNLESS OTHERWISE SHOWN

STANDARD DRAWING

RELEASE DATE	5/1/86	DESIGN	BY	CHECKED	RELEASED BY
FILE NO.	xs1-160	DETAILS	BY R. YEE	CHECKED	Roberto Lovalle
		SUBMITTED	BY	DRAWING DATE 5/86	OFFICE CHIEF

STATE OF CALIFORNIA DEPARTMENT OF TRANSPORTATION

DIVISION OF ENGINEERING SERVICES

BRIDGE NO.

KILOMETER POST

PRESTRESSED BOX GIRDER 610 mm HINGE-ELASTOMERIC

DS OSD 2147A (METRIC) (REV. 2/25/97)

ORIGINAL SCALE IN MILLIMETERS FOR REDUCED PLANS 0 10 20 30 40 50 60 70 80 90 100

CU EA

DISREGARD PRINTS BEARING EARLIER REVISION DATES

REVISION DATES (PRELIMINARY STAGE ONLY) SHEET OF

USERNAME => jsanchez

xs1-160.dgn

DATE PLOTTED => 16-JAN-2004 TIME PLOTTED => 14:33