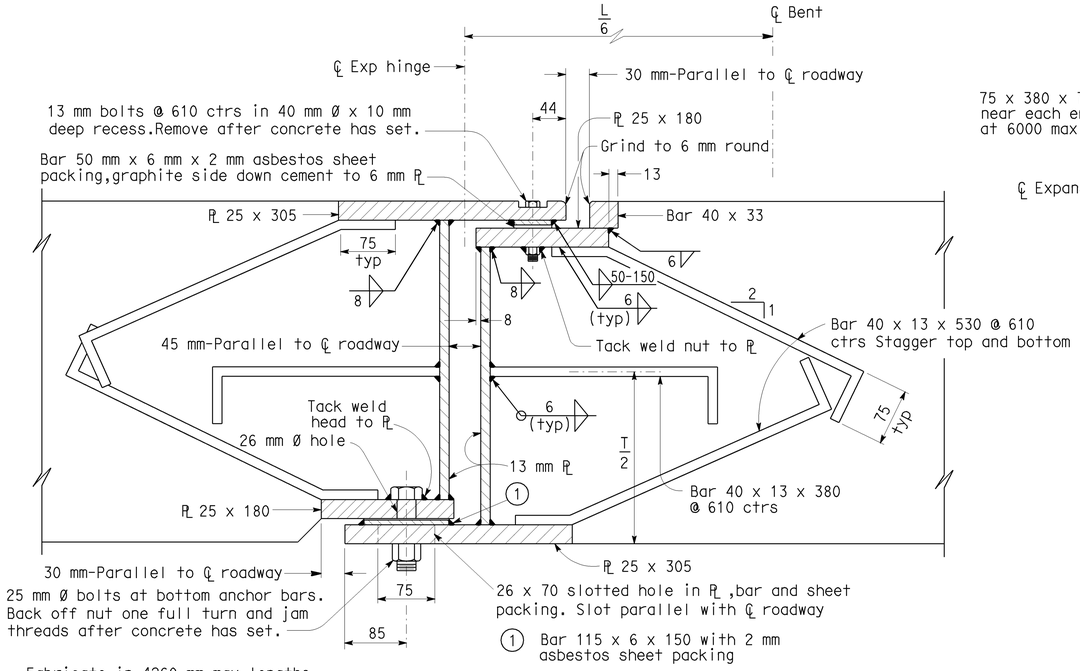

Fabricate in 4260 mm max lengths. Place joints where transverse deck slope changes and at edge of lane. Galvanize after fabrication.

SECTION A-A

L = Length of span

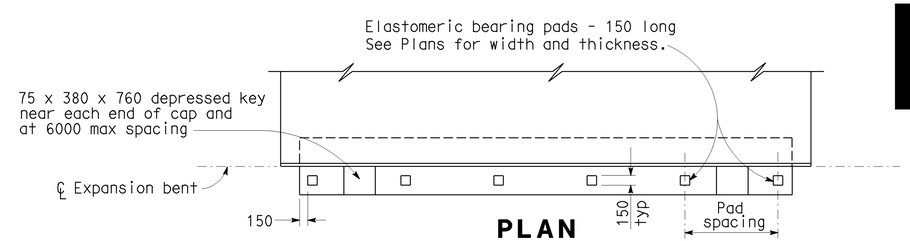

PLAN

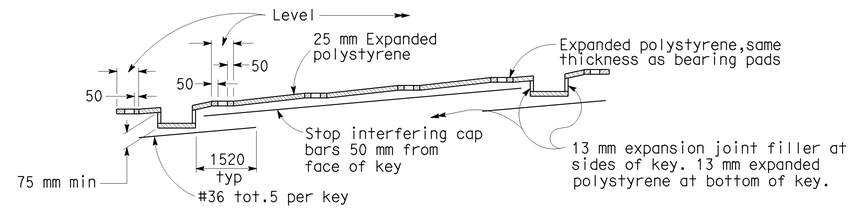

ELEVATION
TYPICAL BEARING DETAILS

SPANS	PAD SPACING
4870 thru 6700	2430
7310 thru 9140	2130
9750 thru 11580	1820
12190 thru 13410	1670

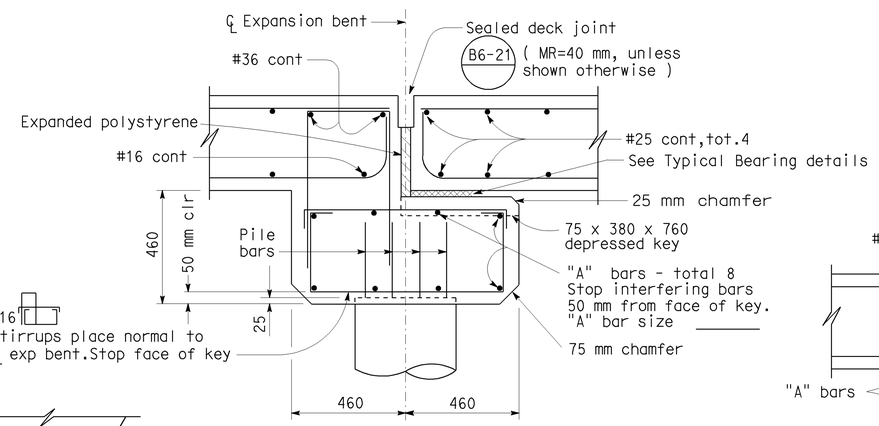

SECTION B-B

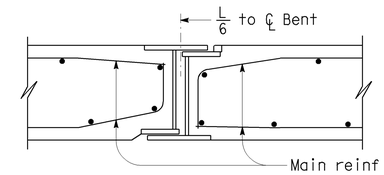

MAIN REINF AT HINGE

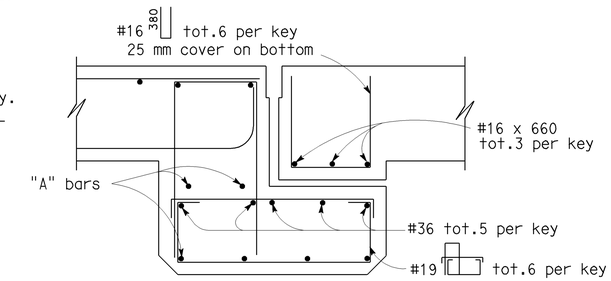

DEPRESSED KEY

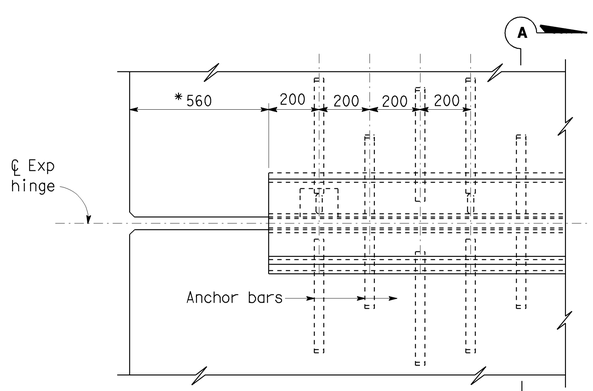

PART PLAN
No Skew

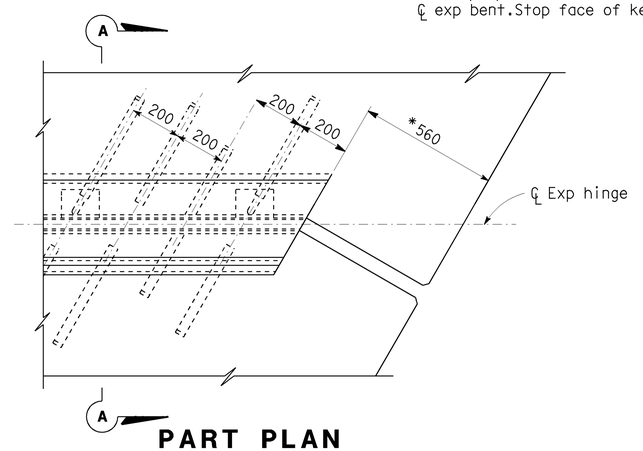

PART PLAN
With Skew

HINGE AT L/6

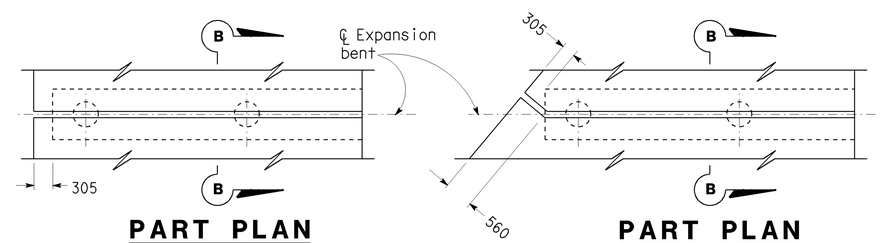

PART PLAN
No Skew

PART PLAN
With Skew

HINGE AT BENT

Note :

All anchor bars shall be placed parallel to ℄ roadway.

* Base width of concrete barrier + 25 mm.

NO SCALE
ALL DIMENSIONS ARE IN MILLIMETERS UNLESS OTHERWISE SHOWN

DIST.	COUNTY	ROUTE	KILOMETER POST TOTAL PROJECT	SHEET NO.	TOTAL SHEETS

REGISTERED ENGINEER - CIVIL

PLANS APPROVAL DATE

REGISTERED PROFESSIONAL ENGINEER No. Exp. CIVIL STATE OF CALIFORNIA

The State of California or its officers or agents shall not be responsible for the accuracy or completeness of electronic copies of this plan sheet.

Caltrans Metric

STANDARD DRAWING

RELEASE DATE	4/4/97	DESIGN	BY L.Y. LEE	CHECKED T. FARNAN	RELEASED BY
FILE NO.	xs1-210	DETAILS	BY R. YEE	CHECKED T. FARNAN	OFFICE CHIEF
		SUBMITTED	BY R.S. WATANABE	DRAWING DATE 11/87	

STATE OF CALIFORNIA
DEPARTMENT OF TRANSPORTATION

DIVISION OF ENGINEERING SERVICES

BRIDGE NO.

KILOMETER POST

SLAB HINGE DETAILS

DS OSD 2147A (METRIC) (REV. 2/25/97)

ORIGINAL SCALE IN MILLIMETERS FOR REDUCED PLANS 0 10 20 30 40 50 60 70 80 90 100

CU
EA

DISREGARD PRINTS BEARING EARLIER REVISION DATES

REVISION DATES (PRELIMINARY STAGE ONLY) SHEET OF

USERNAME => jsanchez

xs1-210.dgn

DATE PLOTTED => 16-JAN-2004 TIME PLOTTED => 14:36