DIST.	COUNTY	ROUTE	KILOMETER POST TOTAL PROJECT	SHEET NO.	TOTAL SHEETS

Caltrans Metric

REGISTERED ENGINEER - CIVIL

PLANS APPROVAL DATE

REGISTERED PROFESSIONAL ENGINEER No. Exp. CIVIL STATE OF CALIFORNIA

The State of California or its officers or agents shall not be responsible for the accuracy or completeness of electronic copies of this plan sheet.

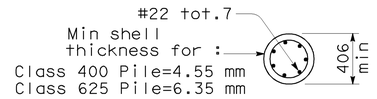

SECTION A-A

SECTION B-B

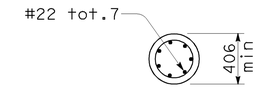

SECTION C-C

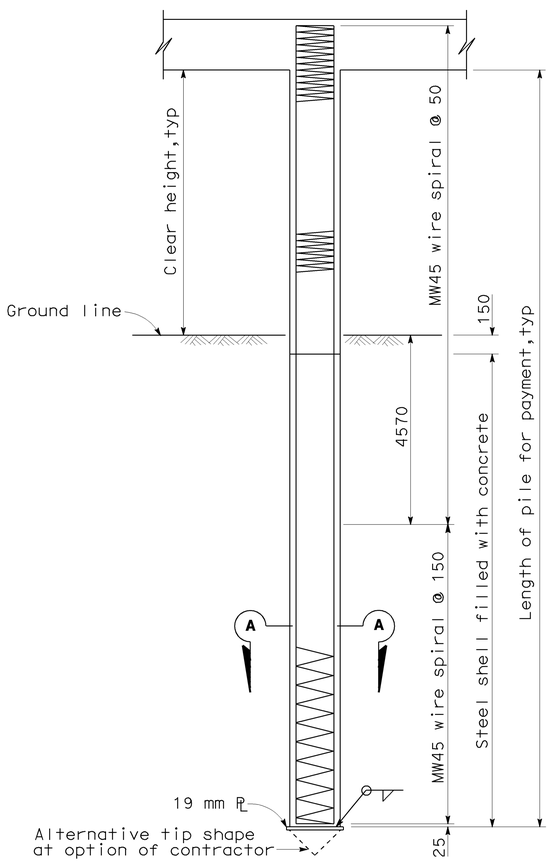

CAST-IN-STEEL SHELL CONCRETE PILE

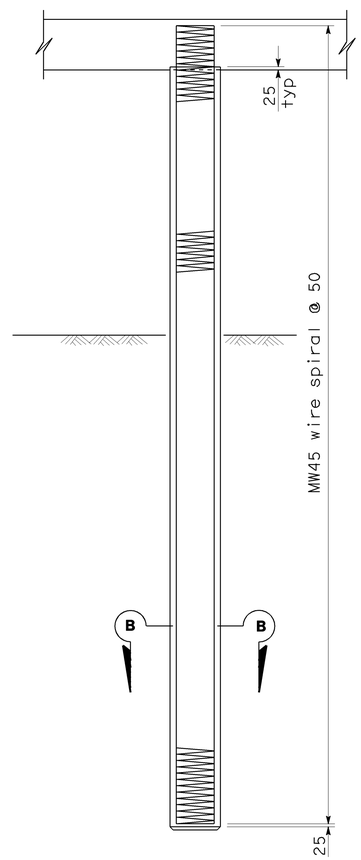

PRECAST PRESTRESSED CONCRETE PILE

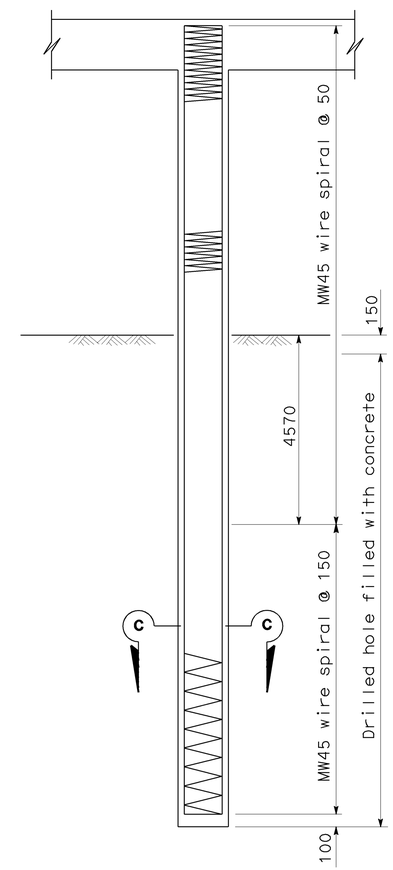

CAST-IN-DRILLED HOLE CONCRETE PILE

NOTES:

1. Design service level loading is 625 kN or less as noted.
2. Maximum size of aggregate is 25 mm.
3. For the prestressed concrete pile:
   A. The prestress force after all losses shall provide 5 MPa minimum stress and shall not be less than 580 kN.
   B. The concrete strength shall not be less than 42 MPa at 28 days.
4. No splices allowed in the longitudinal reinforcement within the "clear height" or within 3 m below the ground line.

NO SCALE

ALL DIMENSIONS ARE IN MILLIMETERS UNLESS OTHERWISE SHOWN

STANDARD DRAWING

RELEASE DATE	4/4/97	DESIGN	BY JIM H. GATES	CHECKED STEVE B. McBRIDE	RELEASED BY
FILE NO.	xs1-230	DETAILS	BY R. YEE	CHECKED R.A. ROGERSON	OFFICE CHIEF
		SUBMITTED	BY R.A. ROGERSON	DRAWING DATE 2/89	

STATE OF CALIFORNIA DEPARTMENT OF TRANSPORTATION

DIVISION OF ENGINEERING SERVICES

BRIDGE NO.

KILOMETER POST

SLAB BRIDGE PILE DETAILS

DS OSD 2147A (METRIC) (REV. 2/25/97)

ORIGINAL SCALE IN MILLIMETERS FOR REDUCED PLANS 0 10 20 30 40 50 60 70 80 90 100

CU
EA

DISREGARD PRINTS BEARING EARLIER REVISION DATES

REVISION DATES (PRELIMINARY STAGE ONLY)

SHEET OF

USERNAME => jsanchez

xs1-230.dgn

DATE PLOTTED => 16-JAN-2004 TIME PLOTTED => 14:37