DIST.	COUNTY	ROUTE	KILOMETER POST TOTAL PROJECT	SHEET NO.	TOTAL SHEETS

Caltrans Metric

REGISTERED ENGINEER - CIVIL

PLANS APPROVAL DATE

REGISTERED PROFESSIONAL ENGINEER No. Exp. CIVIL STATE OF CALIFORNIA

The State of California or its officers or agents shall not be responsible for the accuracy or completeness of electronic copies of this plan sheet.

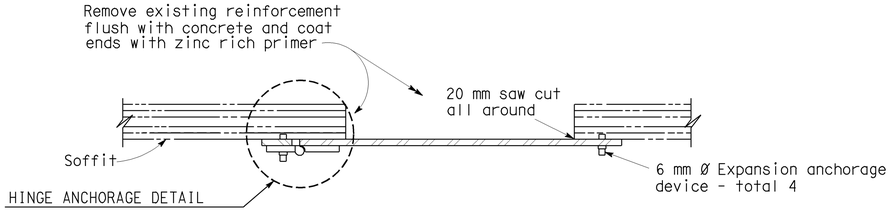

SECTION A-A

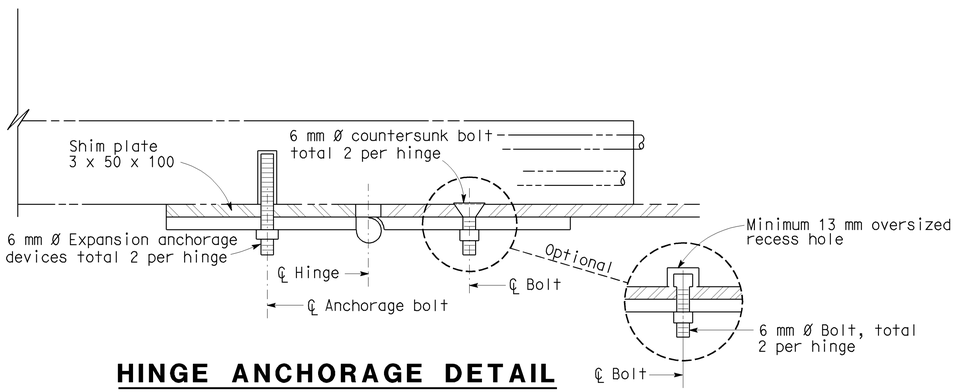

HINGE ANCHORAGE DETAIL

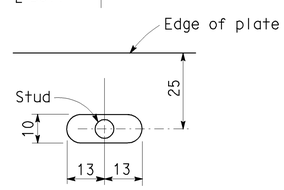

DETAIL A

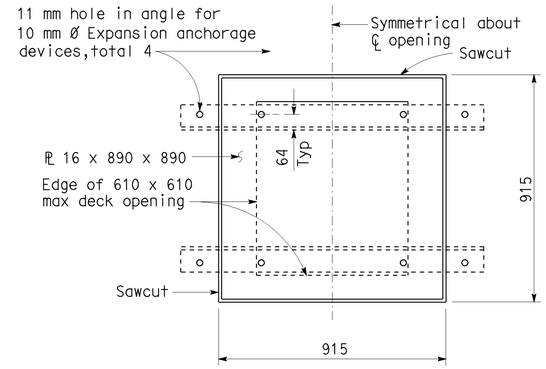

PLAN

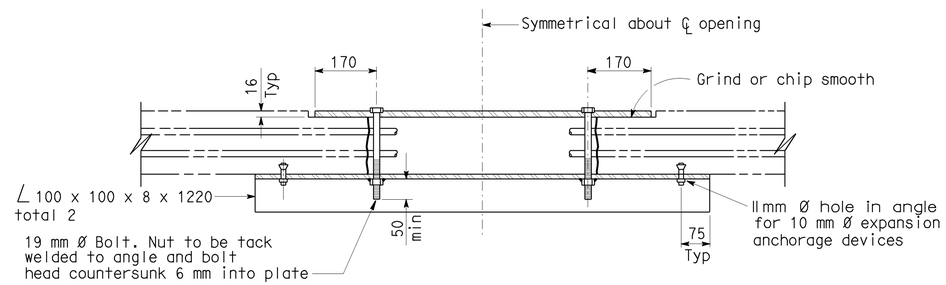

TEMPORARY DECK COVER PLATE

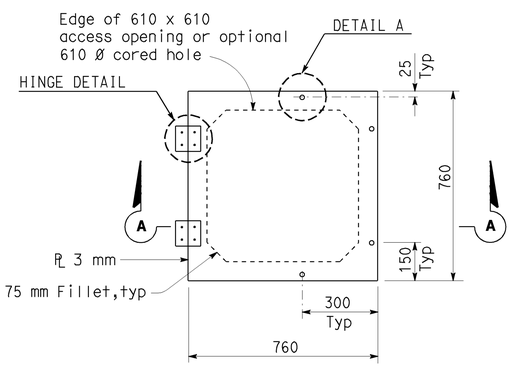

PLAN

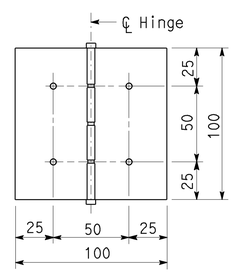

HINGE DETAIL

NOTES:

1. Non-removable pin in hinge.
2. Hinge assembly to be galvanized, brass or stainless steel.
3. Use thread locking system for all hinge nuts.
4. Hinge assembly to be minimum 3 mm thick.

SOFFIT ACCESS DOOR ASSEMBLY

Note: Soffit access door opening direction to be determined by the Engineer

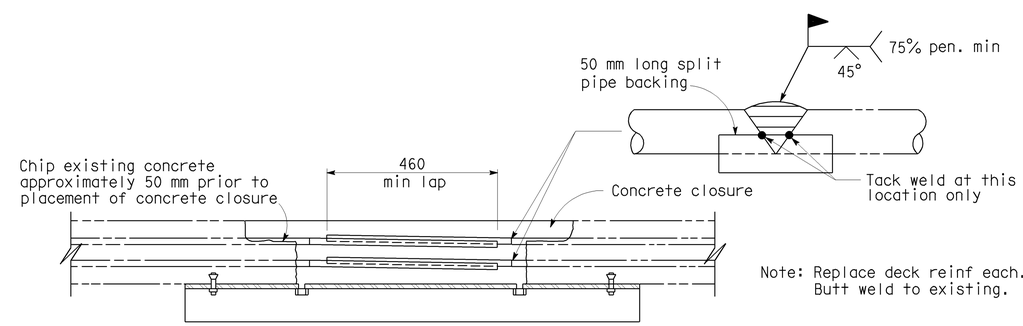

Note: Replace deck reinf each. Butt weld to existing.

DECK CLOSURE

NO SCALE

ALL DIMENSIONS ARE IN MILLIMETERS UNLESS OTHERWISE SHOWN

STANDARD DRAWING					
RELEASE DATE 4/4/97	DESIGN	BY PAT HIPLEY	CHECKED ROBIN ROGERSON	RELEASED BY	
FILE NO. xs1-310	DETAILS	BY R. YEE	CHECKED PAT HIPLEY		
	SUBMITTED	BY RAY ZELINSKI	DRAWING DATE 10/92	OFFICE CHIEF	

STATE OF CALIFORNIA DEPARTMENT OF TRANSPORTATION

DIVISION OF ENGINEERING SERVICES

BRIDGE NO.

KILOMETER POST

DECK AND SOFFIT OPENINGS

DS OSD 2147A (METRIC) (REV. 2/25/97)

ORIGINAL SCALE IN MILLIMETERS FOR REDUCED PLANS 0 10 20 30 40 50 60 70 80 90 100

CU EA

DISREGARD PRINTS BEARING EARLIER REVISION DATES

REVISION DATES (PRELIMINARY STAGE ONLY) SHEET OF

USERNAME => jsanchez

xs1-310.dgn

DATE PLOTTED => 16-JAN-2004 TIME PLOTTED => 14:41