DIST.	COUNTY	ROUTE	KILOMETER POST TOTAL PROJECT	SHEET NO.	TOTAL SHEETS

Caltrans Metric

REGISTERED ENGINEER - CIVIL

PLANS APPROVAL DATE

REGISTERED PROFESSIONAL ENGINEER No. Exp. CIVIL STATE OF CALIFORNIA

The State of California or its officers or agents shall not be responsible for the accuracy or completeness of electronic copies of this plan sheet.

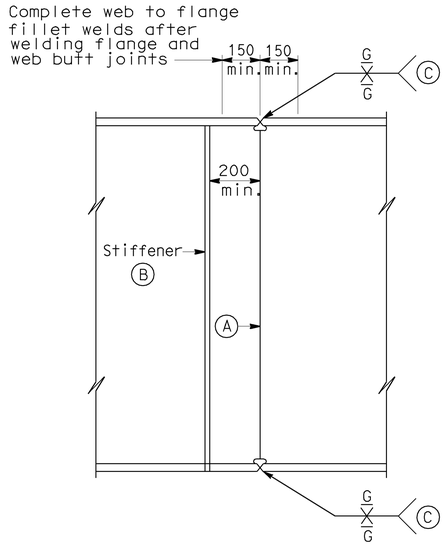

GIRDER SPLICE

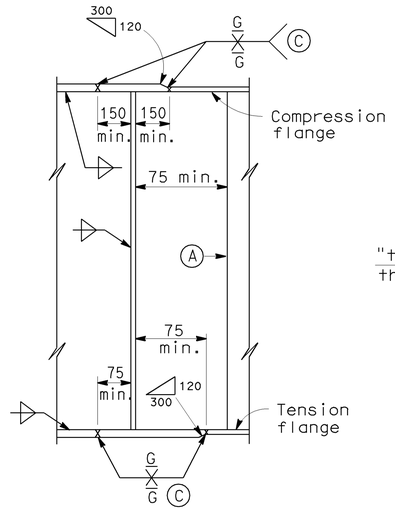

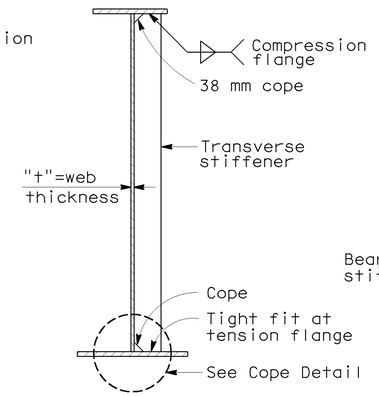

ASSEMBLY AND FABRICATION DETAILS

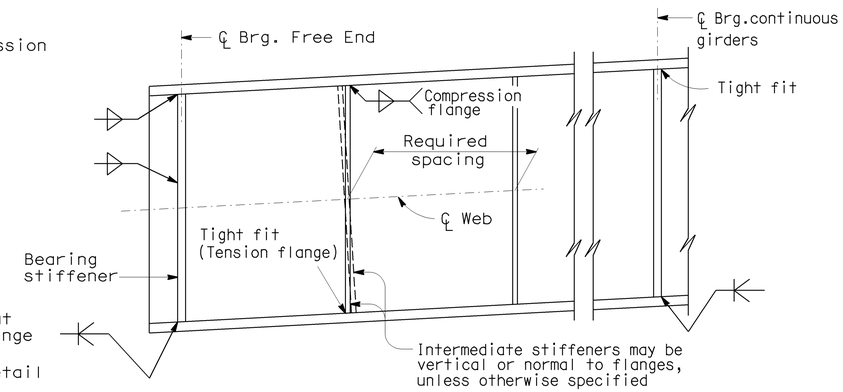

TRANSVERSE STIFFENERS

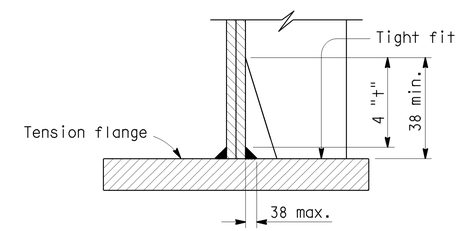

COPE DETAIL

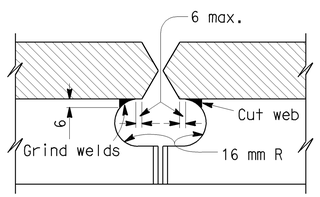

WEB COPE AT GIRDER SPLICE

NOTES:

Alternative girder splices will be permitted subject to approval by the Engineer.

(A) Web butt joints shall be full penetration groove welds. All weld areas on the exterior face of exterior girders shall be ground flush.

Under full dead load and deck shrinkage, as shown on the camber diagram, girder ends and bearing stiffeners shall be vertical except they may be normal to grade for grades less than 2 percent.

(B) Stiffeners adjacent to a girder splice may be field welded.

(C) Grind all surfaces flush on tension flanges.

Grind all surfaces on compression flanges when required for NDI.

Grind all exterior surfaces flush on all bottom compression flanges.

(D) Stop fillet welds 6 mm from end of plate.

(E) Size fillet weld to match the strength of connection required for the joint.

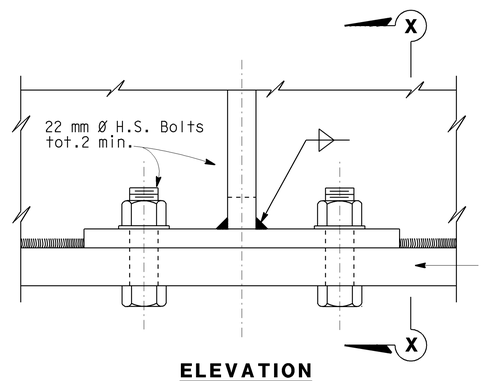

ELEVATION

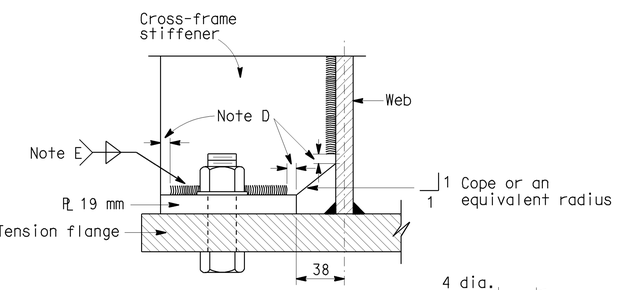

VIEW X-X

CROSS FRAME STIFFENER DETAIL

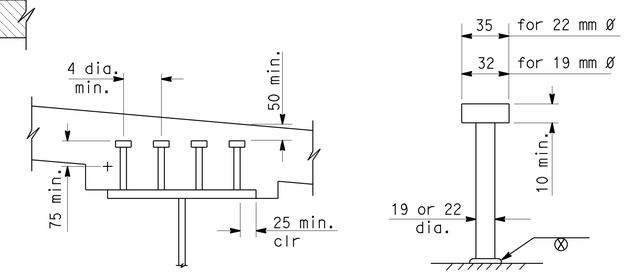

Lengths to be determined by the Contractor,unless otherwise shown.

Minimum length is 127 mm.

The top of deck is designed to be approximately parallel to the top of web for determining girder stud connector height.

Alternative types of shear connectors will be permitted subject to approval by the Engineer.

STUD CONNECTOR

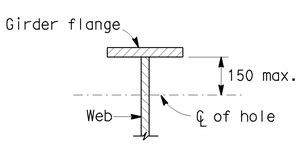

25 mm max.diameter hole at 1.2 m± min. spacing to be used for falsework support when specified by the Contractor. Contractor to determine location, size and spacing.

50 mm max.diameter hole to be drilled where lighting conduit passes through girder web. For location and size of hole see "Lighting Plan".

HOLES FOR CONDUIT AND FALSEWORK

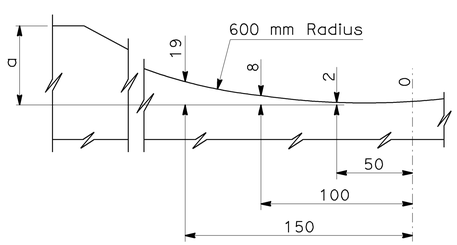

ELEVATION

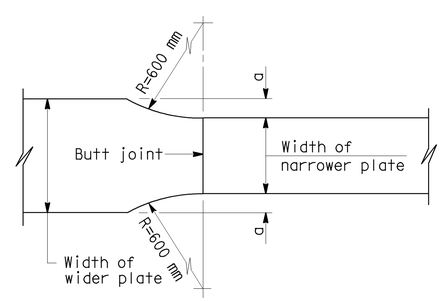

TRANSITION OF WIDTH

FLANGE TRANSITION DETAIL

NO SCALE

ALL DIMENSIONS ARE IN MILLIMETERS UNLESS OTHERWISE SHOWN

STANDARD DRAWING					
RELEASE DATE 3/26/97	DESIGN	BY G. INENEGA	CHECKED D. FUKUSHIMA	RELEASED BY	
FILE NO. xs1-410	DETAILS	BY R. YEE	CHECKED D. FUKUSHIMA		
	SUBMITTED	BY R.C. ANDERSON	DRAWING DATE 1/89	OFFICE CHIEF	

STATE OF CALIFORNIA DEPARTMENT OF TRANSPORTATION

DIVISION OF ENGINEERING SERVICES

BRIDGE NO.

KILOMETER POST

STEEL GIRDER DETAILS

DS OSD 2147A (METRIC) (REV. 2/25/97)

ORIGINAL SCALE IN MILLIMETERS FOR REDUCED PLANS 0 10 20 30 40 50 60 70 80 90 100

CU EA

DISREGARD PRINTS BEARING EARLIER REVISION DATES

REVISION DATES (PRELIMINARY STAGE ONLY) SHEET OF

USERNAME => jsanchez

xs1-410.dgn

DATE PLOTTED => 16-JAN-2004 TIME PLOTTED => 14:41