DIST.	COUNTY	ROUTE	POST MILES TOTAL PROJECT	SHEET NO.	TOTAL SHEETS

REGISTERED ENGINEER - CIVIL

PLANS APPROVAL DATE

REGISTERED PROFESSIONAL ENGINEER No. Exp. CIVIL STATE OF CALIFORNIA

The State of California or its officers or agents shall not be responsible for the accuracy or completeness of electronic copies of this plan sheet.

METRIC NOT APPLICABLE TO THIS SHEET

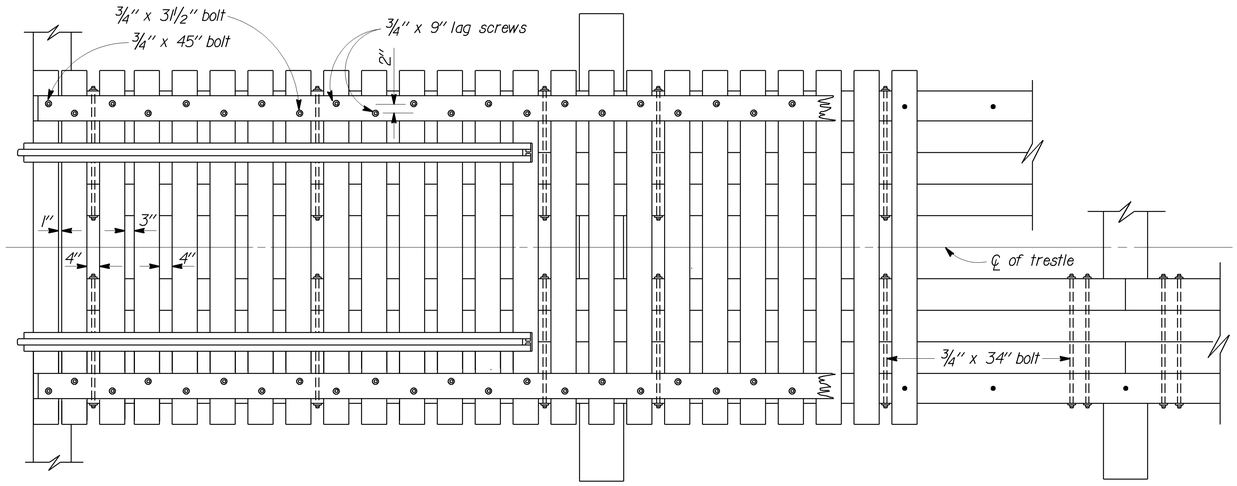

PLAN

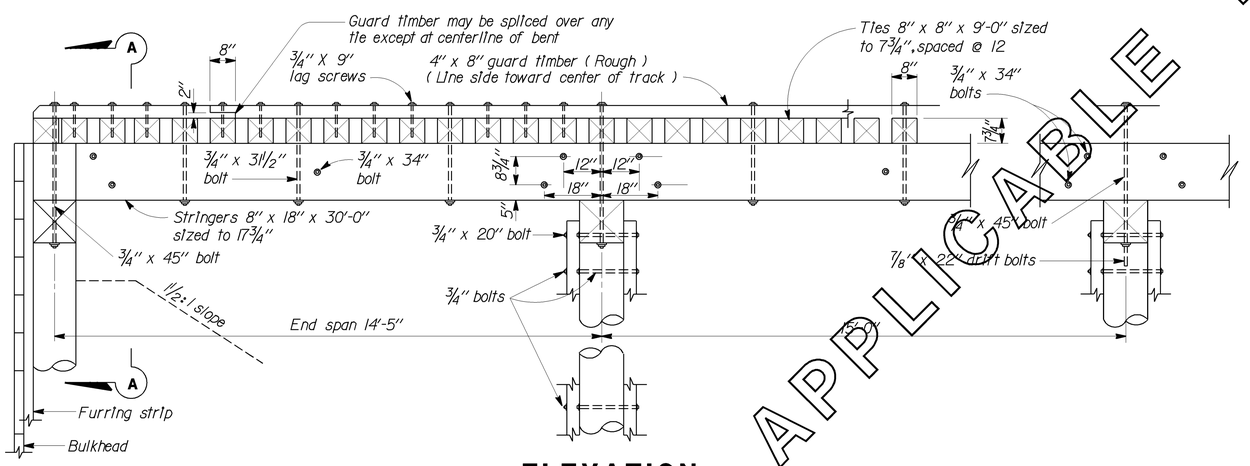

ELEVATION

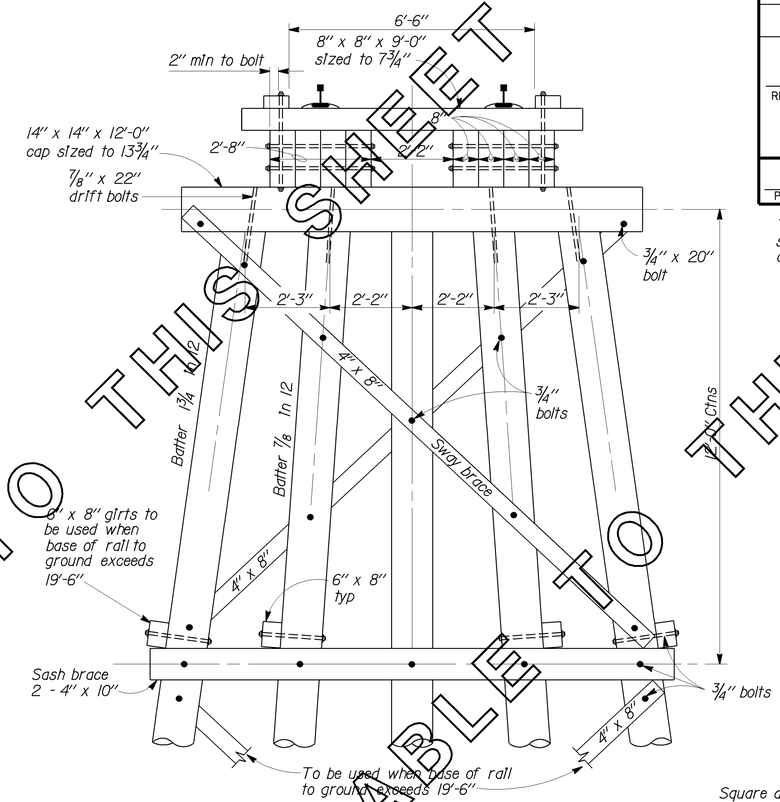

BENT ELEVATION

NOTE: Bulkhead plank & furring shall be spiked at each bearing with not less than 2-7 inch round spikes

BATTER TABLE		
H	A	B
8'-0"	2'- 6 1/4"	5'-1 1/4"
10'-0"	2'-8"	5'- 4 3/4"
12'-0"	2'- 9 3/4"	5'-8 1/4"
14'-0"	2'- 11 1/2"	5'-11 3/4"
16'-0"	3'- 1 1/4"	6'-3 1/4"
18'-0"	3'-3"	6'-6 3/4"
20'-0"	3'-4 3/4"	6'- 10 1/4"
22'-0"	3'- 6 1/2"	7'- 1 3/4"
24'-0"	3'- 8 1/4"	7'- 5 1/4"
26'-0"	3'-10"	7'- 8 3/4"
28'-0"	3'- 11 3/4"	8'- 0 1/4"
30'-0"	4'- 1 1/2"	8'- 3 3/4"
32'-0"	4' -3 1/4"	8'- 7 1/4"
34'-0"	4'- 5"	8'-10 3/4"
36'-0"	4' - 6 3/4"	9'- 2 1/4"

GENERAL NOTES

1. Holes for bolts shall be bored the same diameter as the nominal size of the bolt.
2. Holes for drift bolts shall be bored the same diameter as the nominal size of drift bolt and to a depth 2 inches less than the length of the drift bolt.
3. Holes for lag screws shall be bored 3/4" diameter through the guard timber. Pilot holes, 1/2" diameter and 3 1/2" deep shall be bored in the ties below and shall be accurately centered with the holes above.
4. Machine bolts to have two, and lag screws to have one malleable iron washer each, except as noted.
5. Lag screws must be screwed into place, not driven. When power wrenches are used, the last few turns are to be made by hand.
6. Fillers to be used between transverse bracing and piles where necessary.
7. All timber to be creosoted, douglas fir 1450 stress grade.
8. All hardware to be non-galvanized.
9. Live load = E-60.
10. Drive piles to 20 - tons minimum. Pile tip elevation required = _____ , or low to obtain 20-T. min.
11. For details of sidewalk and handrail, see " Shoofly Sidewalk ".

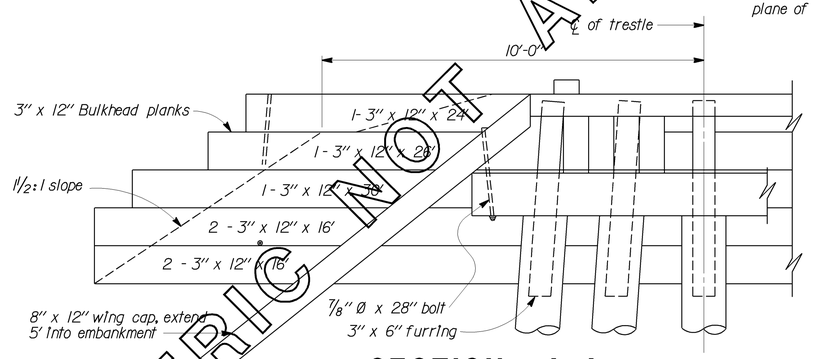

SECTION A-A

NOTES:

1. For superelevation of 4 3/8" or more drive pile No. 2 vertical
2. Piles to be cut off parallel with plane of rails

$$T \text{ (Inches)} = \frac{S \times H \text{ (Feet)}}{5}$$

S = Superelevation in Inches

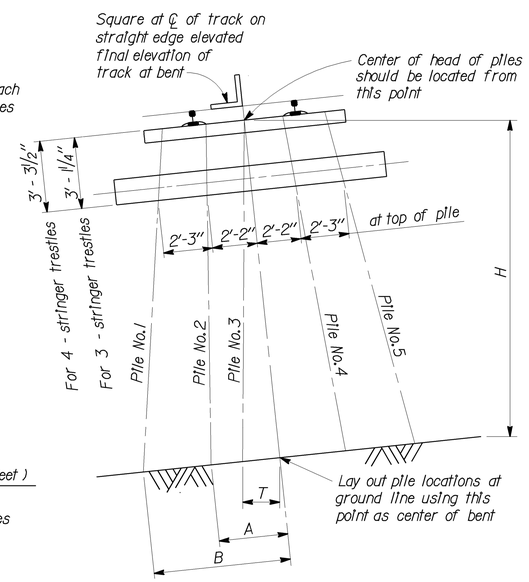

METHOD OF LAYING OUT PILE BENTS FOR TRESTLES ON CURVES

STANDARD DRAWING					
RELEASE DATE 6/17/92	DESIGN	BY S.P.T. Co.	CHECKED	RELEASED BY Shannon Hoot	
FILE NO. xs11-010	DETAILS	BY R. YEE	CHECKED		
	SUBMITTED	BY	DRAWING DATE 12/76	OFFICE CHIEF	

STATE OF CALIFORNIA DEPARTMENT OF TRANSPORTATION

DIVISION OF ENGINEERING SERVICES

BRIDGE NO.

POST MILE

SHOOFLY TRESTLE

DS OSD 2147A (CADD 4/89)

ORIGINAL SCALE IN INCHES FOR REDUCED PLANS 0 1 2 3

CU EA

DISREGARD PRINTS BEARING EARLIER REVISION DATES

REVISION DATES (PRELIMINARY STAGE ONLY) SHEET OF

USERNAME => jsanchez

xs11-010.dgn

DATE PLOTTED => 16-JAN-2004 TIME PLOTTED => 14:30