DIST.	COUNTY	ROUTE	POST MILES TOTAL PROJECT	SHEET NO.	TOTAL SHEETS

REGISTERED ENGINEER - CIVIL

REGISTERED PROFESSIONAL ENGINEER No. Exp. CIVIL STATE OF CALIFORNIA

PLANS APPROVAL DATE

The State of California or its officers or agents shall not be responsible for the accuracy or completeness of electronic copies of this plan sheet.

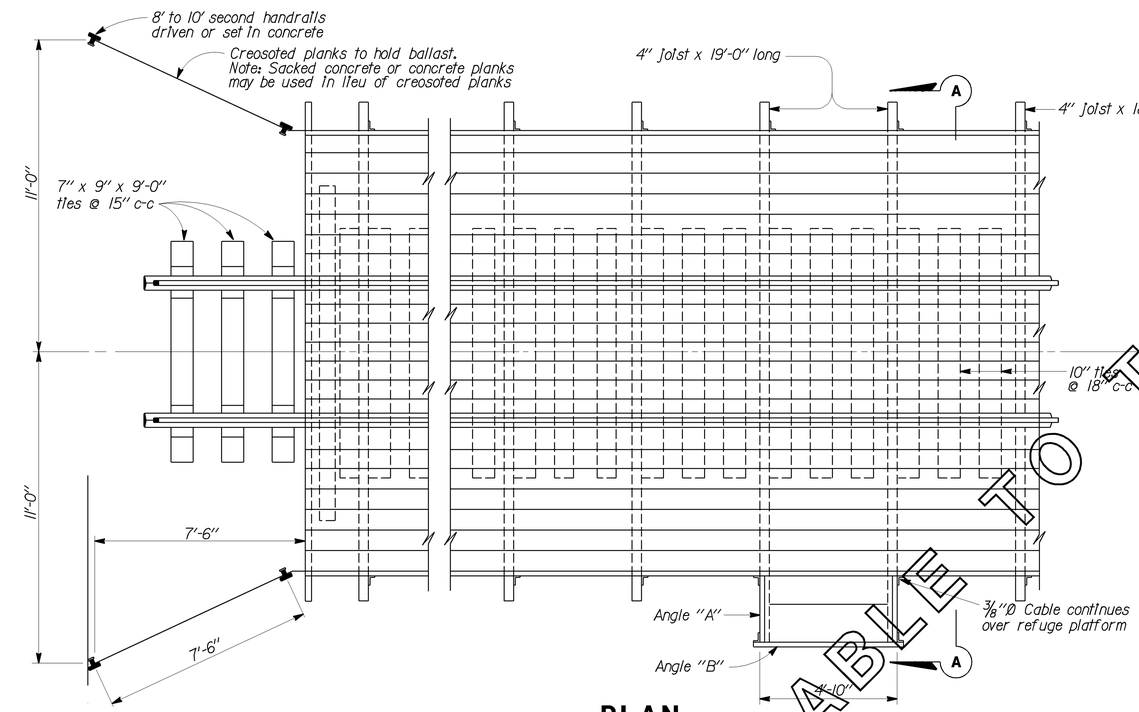

PLAN

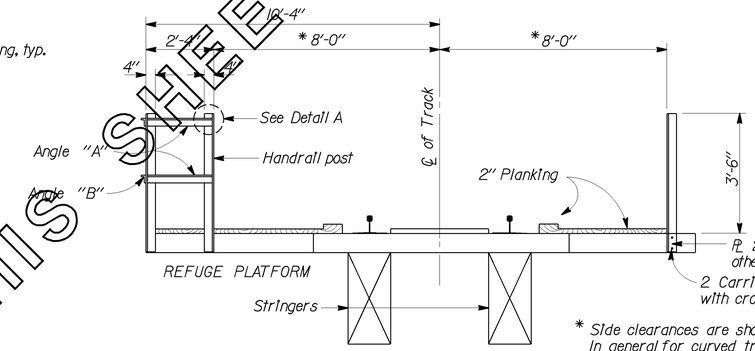

* Side clearances are shown for tangent track. In general for curved track increase by 1'-0" each side. Increasing length of joists and width of grating accordingly.

SECTION A-A

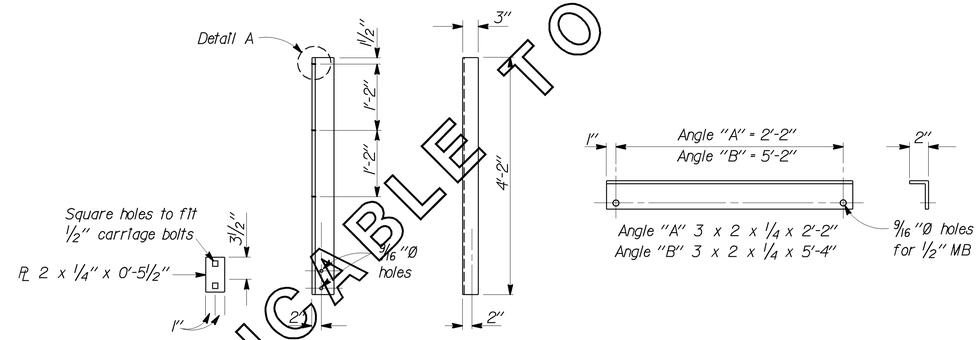

HANDRAIL POST DETAIL

L 4 x 3 x 1/4 x 4'-2"

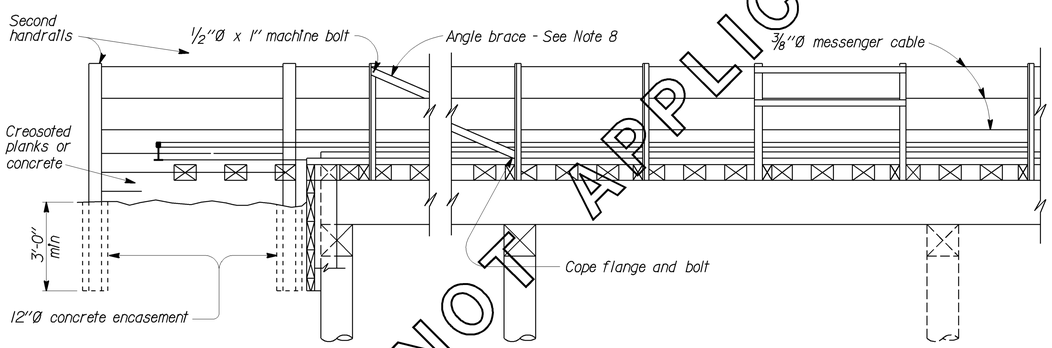

ELEVATION

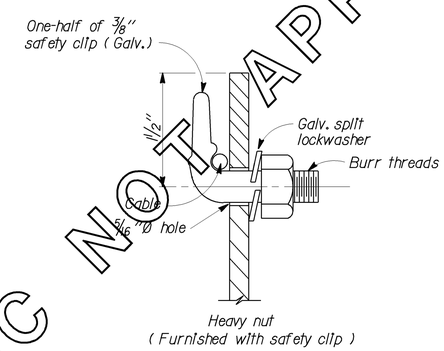

DETAIL A

LIVE END ANCHORAGE

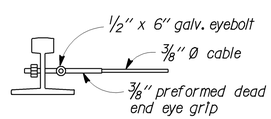

DETAIL OF DEAD END ANCHORAGE

NOTES:

1. Distance from abutment to refuge platform and between platforms shall not exceed 300 feet. Platforms shall not be located on alternate sides of track.
2. 18' sidewalk joists to be placed every 3rd tie space. Handrail posts placed on alternate joints.
3. Sidewalk and refuge platform joists to be sized 7 3/4".
4. Handrail posts and plates to be ASTM-A242 ('Weathering' Steel) or ASTM-A36 galvanized.
5. Carriage bolts to be galvanized or stainless steel. Safety clips and lock nuts to be galvanized or cadmium plated.
6. Threads of all bolts should be burred to prevent removal of nuts.
7. Cable may be spliced using mechanical splicers.
8. On bridges over 200 feet, provide diagonal angle bracing at approximate 200 foot intervals.
9. All timber to be creosoted.
10. Wherever highway traffic is carried under a shoofly, the opening between rails shall be planked over highway and pedestrian portions.

METRIC NOT APPLICABLE TO THIS SHEET

STANDARD DRAWING				
RELEASE DATE 6/17/92	DESIGN	BY S.P.T. Co.	CHECKED	RELEASED BY Shannon Hoot
FILE NO. xs11-020	DETAILS	BY R. YEE	CHECKED	OFFICE CHIEF
	SUBMITTED	BY	DRAWING DATE 12/76	

STATE OF CALIFORNIA DEPARTMENT OF TRANSPORTATION

DIVISION OF ENGINEERING SERVICES

BRIDGE NO.

POST MILE

SHOOFLY SIDEWALK

DS OSD 2147A (CADD 4/89)

ORIGINAL SCALE IN INCHES FOR REDUCED PLANS 0 1 2 3

CU EA

DISREGARD PRINTS BEARING EARLIER REVISION DATES

REVISION DATES (PRELIMINARY STAGE ONLY) SHEET OF

DATE PLOTTED => 16-JAN-2004 TIME PLOTTED => 14:31

USERNAME => jsanchez

xs11-020.dgn