DIST.	COUNTY	ROUTE	KILOMETER POST TOTAL PROJECT	SHEET NO.	TOTAL SHEETS

REGISTERED ENGINEER - CIVIL

PLANS APPROVAL DATE

REGISTERED PROFESSIONAL ENGINEER No. Exp. CIVIL STATE OF CALIFORNIA

The State of California or its officers or agents shall not be responsible for the accuracy or completeness of electronic copies of this plan sheet.

Caltrans Metric

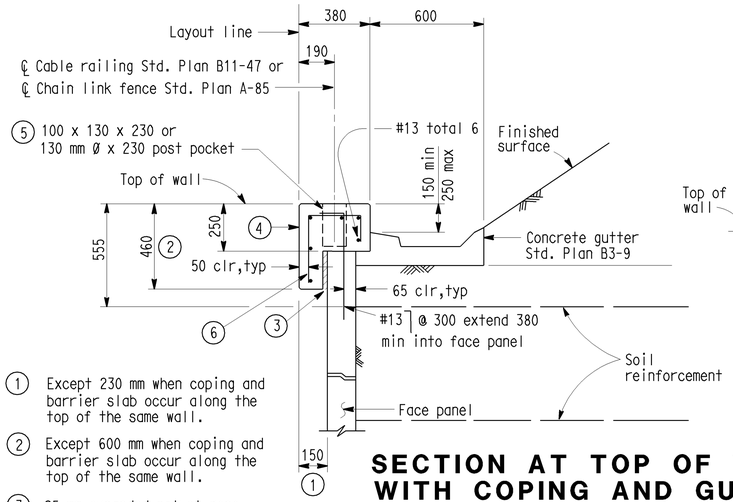

1. Except 230 mm when coping and barrier slab occur along the top of the same wall.
2. Except 600 mm when coping and barrier slab occur along the top of the same wall.
3. 25 mm expanded polystyrene.
4. 13 mm expansion joints in coping at every fourth panel joint.
5. Locate post pockets a minimum of 600 mm from expansion joints and ends of coping.
6. #13 @ 300, except 2 spaces at 150 each side of post pockets

SECTION AT TOP OF WALL WITH COPING AND GUTTER

Note A: Install cable railing or chain link fence when indicated in project plans.

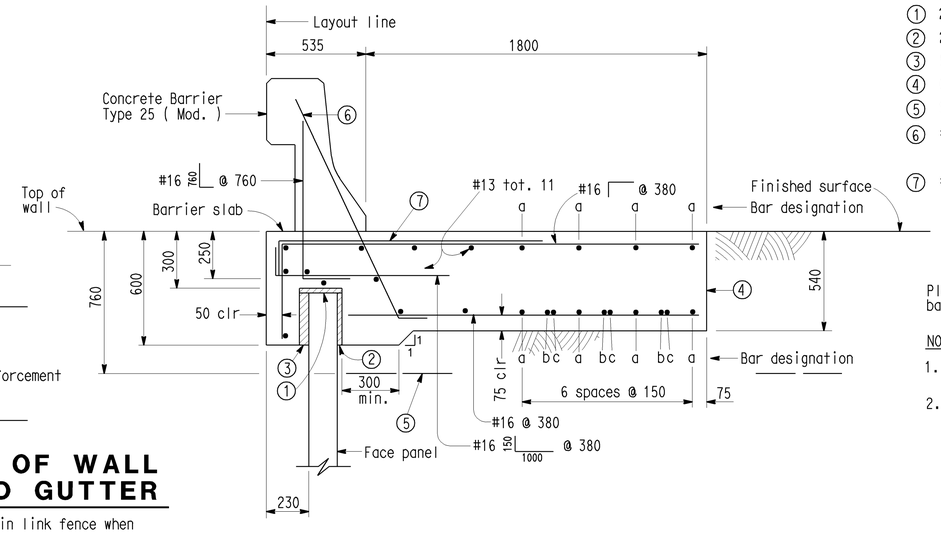

1. 25 mm Expanded polystyrene
2. 25 mm Expanded polystyrene
3. 50 mm Expanded polystyrene
4. Contact joint
5. Soil reinforcement
6. #16 @ 380, except 4 spaces @ 190 at ends of wall
7. #16 @ 380, bundled with #16 @ 380

"a" bar = #19 continuous
"b" bar = #19 x 18 m
"c" bar = #19 x 15 m

Place "b" and "c" bars at beginning and ending ends of barrier slab.

NOTES:

1. Clearance to reinforcing steel in concrete barrier to be 25 mm.
2. No expansion joints in barrier or barrier slab within limits of wall.

SECTION AT TOP OF WALL WITH CONCRETE BARRIER TYPE 25 (MOD)

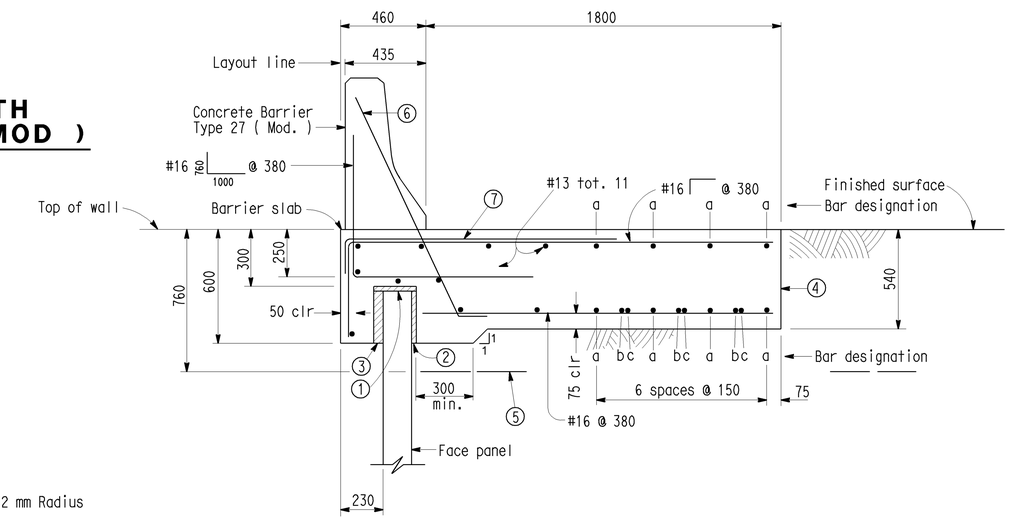

SECTION AT TOP OF WALL WITH CONCRETE BARRIER TYPE 27 (MOD)

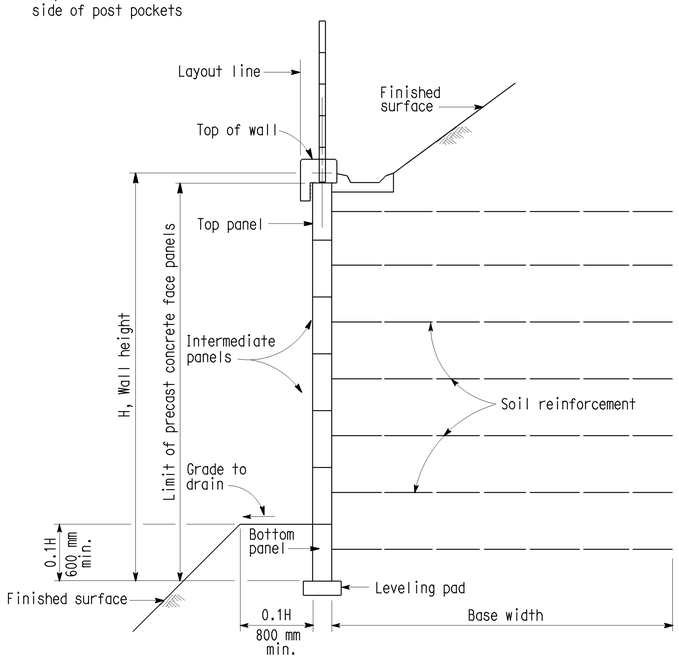

WALL SECTION WITH COPING AND GUTTER

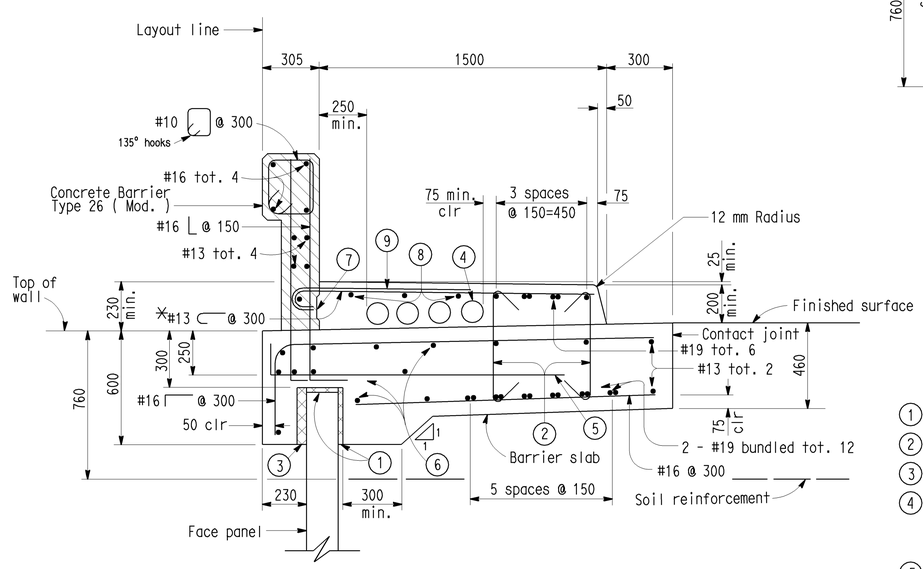

SECTION AT TOP OF WALL WITH CONCRETE BARRIER TYPE 26 (MOD)

NOTES FOR CONCRETE BARRIER TYPE 26 (MOD)

1. 25 mm Expanded polystyrene
2. #13 135° hooks @ 300
3. 50 mm Expanded polystyrene
4. Utility openings, 125 mm inside diameter, minimum 2 openings, maximum 4 openings. Openings are to be sealed at ends if not used. Secure forms for openings to barrier slab.
5. #16 @ 300
6. #13 tot. 13
7. Optional construction joint
8. #13 tot. 4
9. #13 @ 150 bundle alternate bars with #13 @ 300
   Bundle with each #13 @ 150 at ends of wall.

✳ Except 6 spaces at 150 mm at ends of wall.

A. Clearance to reinforcing steel in concrete barrier to be 25 mm.

B. No expansion joint in barrier or barrier slab within limits of wall.

Parapet concrete = Structural concrete f'c = 28 MPa

NO SCALE

ALL DIMENSIONS ARE IN MILLIMETERS UNLESS OTHERWISE SHOWN

STANDARD DRAWING				
RELEASE DATE 10/6/98	DESIGN	BY J.C. MOESE	CHECKED S.D. WIMAN	RELEASED BY
FILE NO. xs13-010-1	DETAILS	BY R.YEE	CHECKED S.D. WIMAN	OFFICE CHIEF
	SUBMITTED	BY J.C. MOESE	DRAWING DATE 3/98	

STATE OF CALIFORNIA DEPARTMENT OF TRANSPORTATION

DIVISION OF ENGINEERING SERVICES

BRIDGE NO.

KILOMETER POST

MECHANICALLY STABILIZED EMBANKMENT DETAILS NO. 1

DS OSD 2147A (METRIC) (REV. 2/25/97)

ORIGINAL SCALE IN MILLIMETERS FOR REDUCED PLANS 0 10 20 30 40 50 60 70 80 90 100

CU EA

DISREGARD PRINTS BEARING EARLIER REVISION DATES

REVISION DATES (PRELIMINARY STAGE ONLY) SHEET OF

USERNAME => jsanchez

xs13-010-1.dgn

DATE PLOTTED => 16-JAN-2004 TIME PLOTTED => 14:37