DIST.	COUNTY	ROUTE	KILOMETER POST TOTAL PROJECT	SHEET NO.	TOTAL SHEETS

REGISTERED ENGINEER - CIVIL

PLANS APPROVAL DATE

REGISTERED PROFESSIONAL ENGINEER No. Exp. CIVIL STATE OF CALIFORNIA

The State of California or its officers or agents shall not be responsible for the accuracy or completeness of electronic copies of this plan sheet.

Caltrans Metric

TABLE	
WELDED WIRE MAT DENSITY	PANEL REINFORCEMENT
6 - MW70 MATS OR LESS	MD35 @ 150
4 - MW130 MATS	MD45 @ 150
6 - MW130 MATS	MD60 @ 150

Densities shown are for full panels

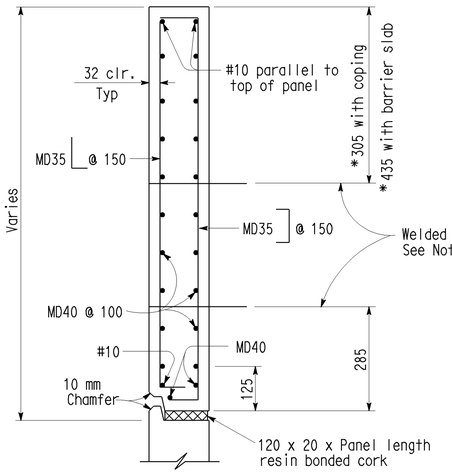

*Measured normal to top of panel

TOP PANEL

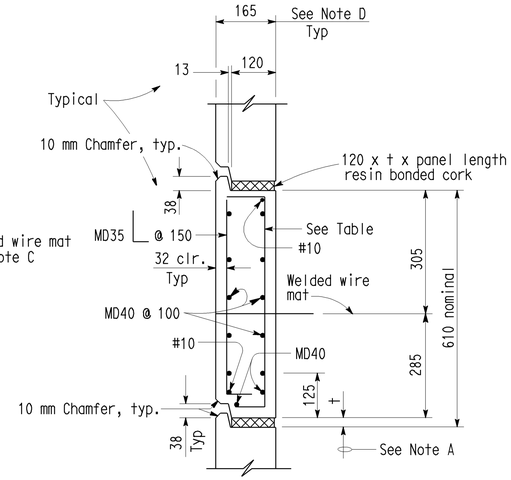

INTERMEDIATE PANEL

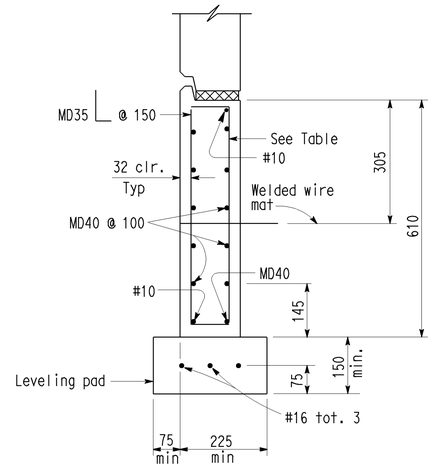

BOTTOM PANEL

Note A: For joints ≤ 6.09 m below top of wall, t=20. For joints > 6.09 m below top of wall, t=25.

Note B: Except for #10 bars reinforcement may be fabricated as welded wire fabric.

Note C: Number of levels of welded mats in top panel varies, See M.S.E. Details No. 2 sheet.

Note D: Dimension to be increased to compensate for architectural treatment. For architectural treatment, refer to Project Plans. The position of panel reinforcement and the width of the seat at the top and bottom of the panel shall remain unchanged.

Note E: Panels to be cast straight along their length.

SECTIONS - FACE PANELS

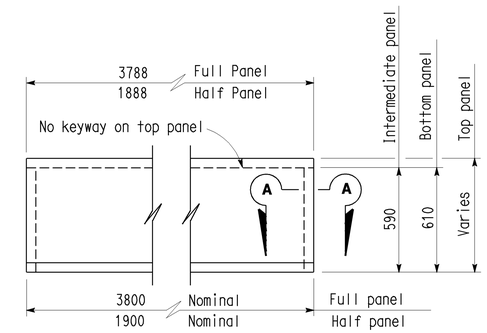

FRONT ELEVATION - FACE PANEL

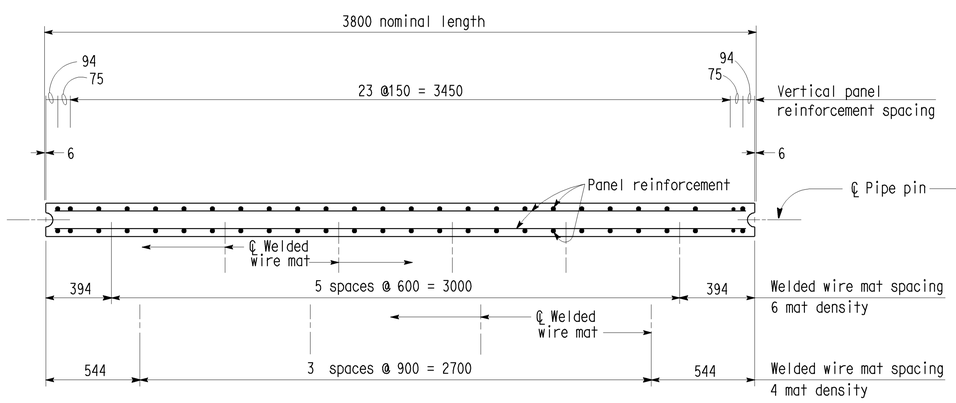

PLAN - FULL FACE PANEL

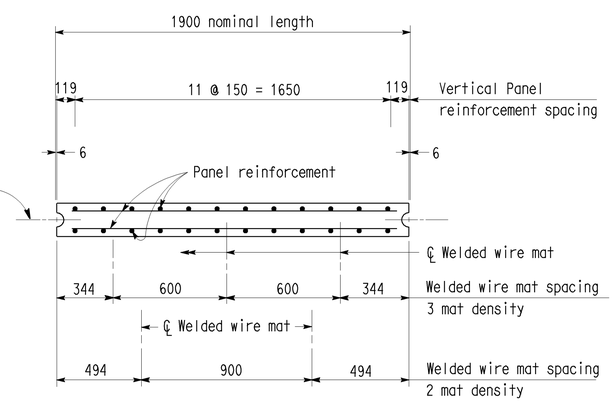

PLAN - HALF FACE PANEL

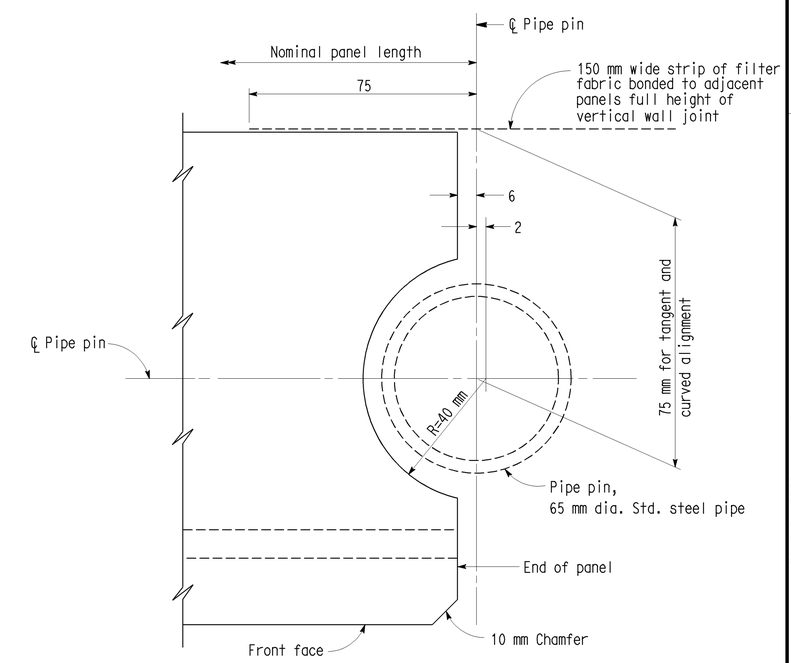

SECTION A-A

NO SCALE

ALL DIMENSIONS ARE IN MILLIMETERS UNLESS OTHERWISE SHOWN

STANDARD DRAWING				
RELEASE DATE 10/6/98	DESIGN BY J.C. MOESE	CHECKED S.D. WIMAN	RELEASED BY	
FILE NO. xs13-010-3	DETAILS BY R. YEE	CHECKED S.D. WIMAN		
	SUBMITTED BY J.C. MOESE	DRAWING DATE 3/98	OFFICE CHIEF	

STATE OF CALIFORNIA DEPARTMENT OF TRANSPORTATION

DIVISION OF ENGINEERING SERVICES

BRIDGE NO.

KILOMETER POST

MECHANICALLY STABILIZED EMBANKMENT DETAILS NO. 3

DS OSD 2147A (METRIC) (REV. 2/25/97)

ORIGINAL SCALE IN MILLIMETERS FOR REDUCED PLANS 0 10 20 30 40 50 60 70 80 90 100

CU EA

DISREGARD PRINTS BEARING EARLIER REVISION DATES

REVISION DATES (PRELIMINARY STAGE ONLY) SHEET OF

USERNAME => jsanchez

xs13-010-3.dgn

DATE PLOTTED => 16-JAN-2004 TIME PLOTTED => 14:38