DIST.	COUNTY	ROUTE	KILOMETER POST TOTAL PROJECT	SHEET NO.	TOTAL SHEETS

Caltrans Metric

REGISTERED ENGINEER - CIVIL

PLANS APPROVAL DATE

REGISTERED PROFESSIONAL ENGINEER No. Exp. CIVIL STATE OF CALIFORNIA

The State of California or its officers or agents shall not be responsible for the accuracy or completeness of electronic copies of this plan sheet.

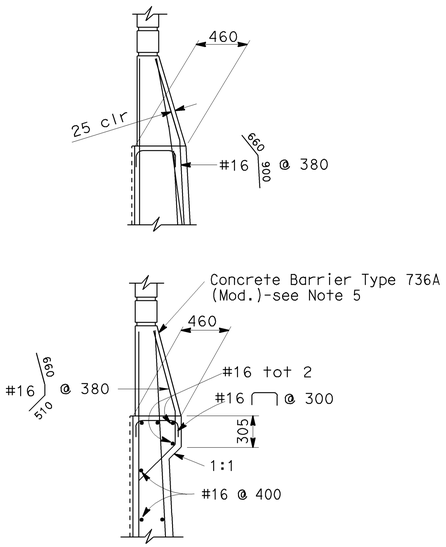

CONCRETE BARRIER TYPE 736A

(Alternative)

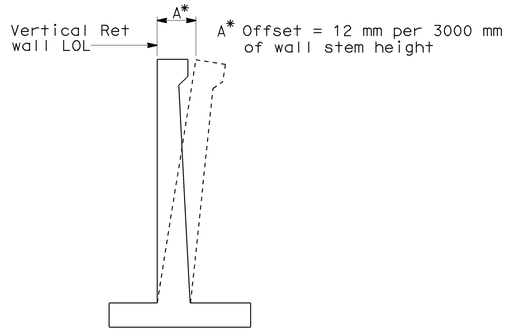

WALL OFFSET

Values for offsetting forms to be determined by the Engineer

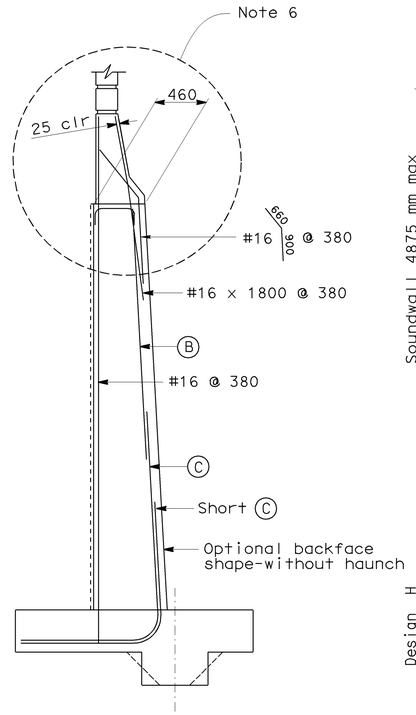

OPTIONAL SPREAD FOOTING SECTION

For details not shown, see ''SPREAD FOOTING SECTION'' detail

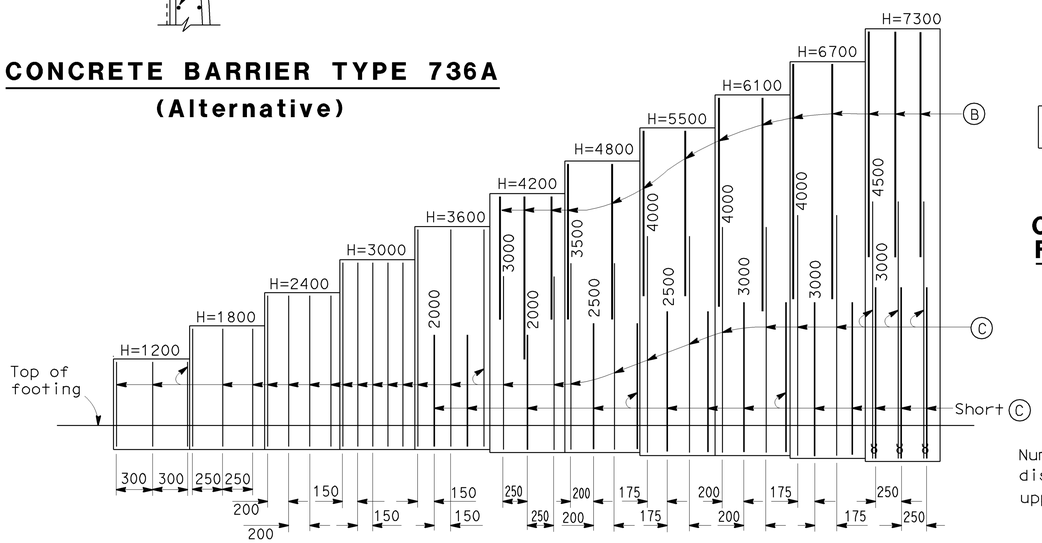

ELEVATION

NOTE:

8 - Bundle bars

Numbers above C bars indicate distance from top of footing to upper end of C bars

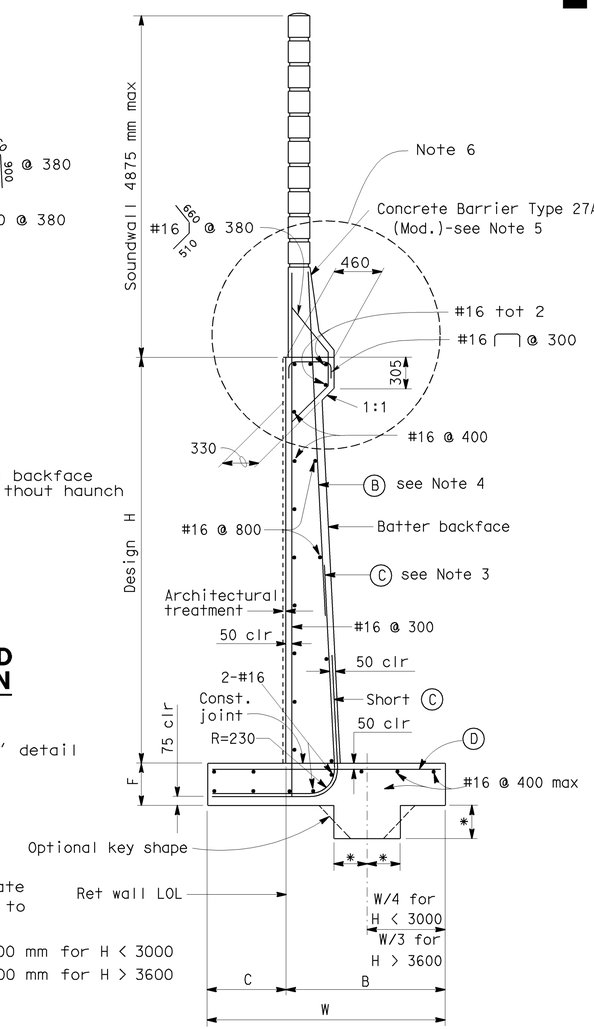

* 200 mm for H < 3000
300 mm for H > 3600

SPREAD FOOTING SECTION

DESIGN DATA

REINFORCED CONCRETE

fs = 168 MPa f'c = 25 MPa
fc = 10 MPa n = 10
γ Soil = 19 kN/m^3
Live load = 11.5 kPa surcharge
Equivalent fluid pressure
=5.6 kPa/m max for determination of toe pressure
=4.2 kPa/m max for determination of heel pressure

LEVEL SLOPE

Seismic load = 0.3 Dead load
Wind load = 1435 Pa
Dead load of soundwall = 20.6 kN/m
Dead load of barrier = 5.4 kN/m

DESIGN CONDITIONS

Design H may be exceeded by 150 mm before going to the next Design H

Special footing design is required where foundation material is incapable of supporting the toe pressure listed in table

LOADING COMBINATION	PERCENTAGE OF BASIC UNIT STRESS
Group 1 :D+E+SC	100
Group 2 :D+E+SC+W	133
Group 3 :D+E+EQD	133

D = Dead load
E = Lateral earth pressure
SC = Live load surcharge
W = Wind load
EQD = Seismic dead load

NOTES:

1. For soundwall and retaining wall Architectural treatment, see details elsewhere in project plans.
2. For details not shown and drainage notes, see B3-8
3. For H=1200 thru H=3600, extend bars to top of concrete barrier.
4. For H=4200 thru H=7300, extend bars to top of concrete barrier.
5. For longitudinal reinforcement, see details elsewhere in project plans.
6. For Concrete Barrier Type 736A See Alternative for details.

NO SCALE

ALL DIMENSIONS ARE IN MILLIMETERS UNLESS OTHERWISE SHOWN

TABLE OF REINFORCING STEEL DIMENSIONS AND DATA (mm)

DESIGN H	1200	1800	2400	3000	3600	4200	4800	5500	6100	6700	7300
W	1700	1850	2050	2300	2650	3000	3500	4100	4700	5400	6200
C	550	600	700	750	900	1000	1150	1350	1550	1800	2050
B	1150	1250	1350	1550	1750	2000	2350	2750	3150	3600	4150
F SPREAD FTG	400	400	400	400	400	400	450	500	600	700	800
STEM WITH HAUNCH, BATTER	100:4	100:4	100:4	100:4	100:4	100:4	100:4	100:5	100:6	100:7	100:8
STEM WITHOUT HAUNCH, BATTER						100:2	100:2	100:2	100:4	100:5	100:6
B BARS						#16 @ 250	#22 @ 400	#22 @ 350	#25 @ 400	#25 @ 350	#22 @ 250
C BARS	#16 @ 300	#16 @ 250	#16 @ 200	#16 @ 150	#19 @ 150	#29 @ 250	#29 @ 200	#32 @ 175	#36 @ 200	#36 @ 175	#32 @ 2508
D BARS	#13 @ 300	#13 @ 250	#13 @ 200	#16 @ 150	#16 @ 150	#25 @ 250	#22 @ 200	#29 @ 175	#29 @ 200	#32 @ 175	#36 @ 250
11.5 kPa surcharge Toe Pr.kPa	140	140	140	150	150	150	150	150	150	150	150

STANDARD DRAWING

RELEASE DATE 7/29/03	DESIGN BY C.E. ROWORTH	CHECKED A. SALERNO	RELEASED BY Shannon L. Root
FILE NO. xs14-110	DETAILS BY R. YEE	CHECKED	OFFICE CHIEF
	SUBMITTED BY J.C. MOESE	DRAWING DATE 8/96	

STATE OF CALIFORNIA
DEPARTMENT OF TRANSPORTATION

DIVISION OF ENGINEERING SERVICES

BRIDGE NO.

KILOMETER POST

RETAINING WALL WITH SOUNDWALL ON BARRIER

DS OSD 2147A (METRIC) (REV. 2/25/97)

ORIGINAL SCALE IN MILLIMETERS FOR REDUCED PLANS 0 10 20 30 40 50 60 70 80 90 100

CU
EA

DISREGARD PRINTS BEARING EARLIER REVISION DATES

REVISION DATES (PRELIMINARY STAGE ONLY) SHEET OF

USERNAME => jsanchez

xs14-110.dgn

DATE PLOTTED => 16-JAN-2004 TIME PLOTTED => 14:42