DIST.	COUNTY	ROUTE	KILOMETER POST TOTAL PROJECT	SHEET NO.	TOTAL SHEETS

REGISTERED ENGINEER - CIVIL

PLANS APPROVAL DATE

REGISTERED PROFESSIONAL ENGINEER No. Exp. CIVIL STATE OF CALIFORNIA

The State of California or its officers or agents shall not be responsible for the accuracy or completeness of electronic copies of this plan sheet.

Caltrans Metric

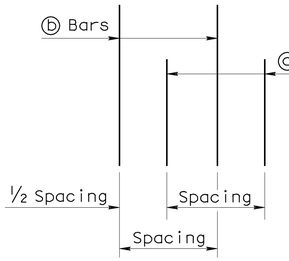

DETAIL B

No Scale

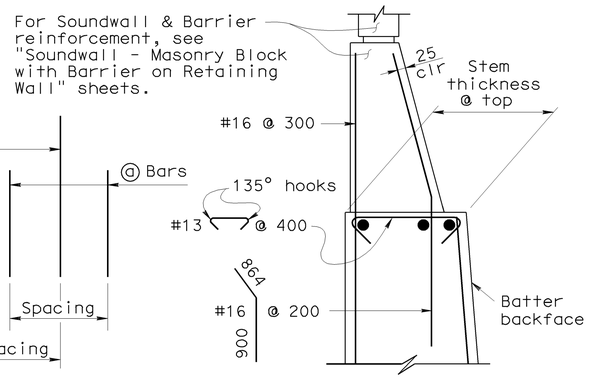

DETAIL A WITHOUT HAUNCH

No Scale

GENERAL NOTES

1. For soundwall and retaining wall architectural finish or texture, see details elsewhere in project plans.
2. For details not shown and drainage notes, see B3-8
3. Footing cover, 450 mm minimum.
4. Limit of no splicing rebars = H/3
5. Increasing stem thickness not permitted:

* ⓐ & ⓑ bars are bundled together.

** Alternate ⓐ & ⓑ bars are shown in "Detail B".

Cont = Continuous.

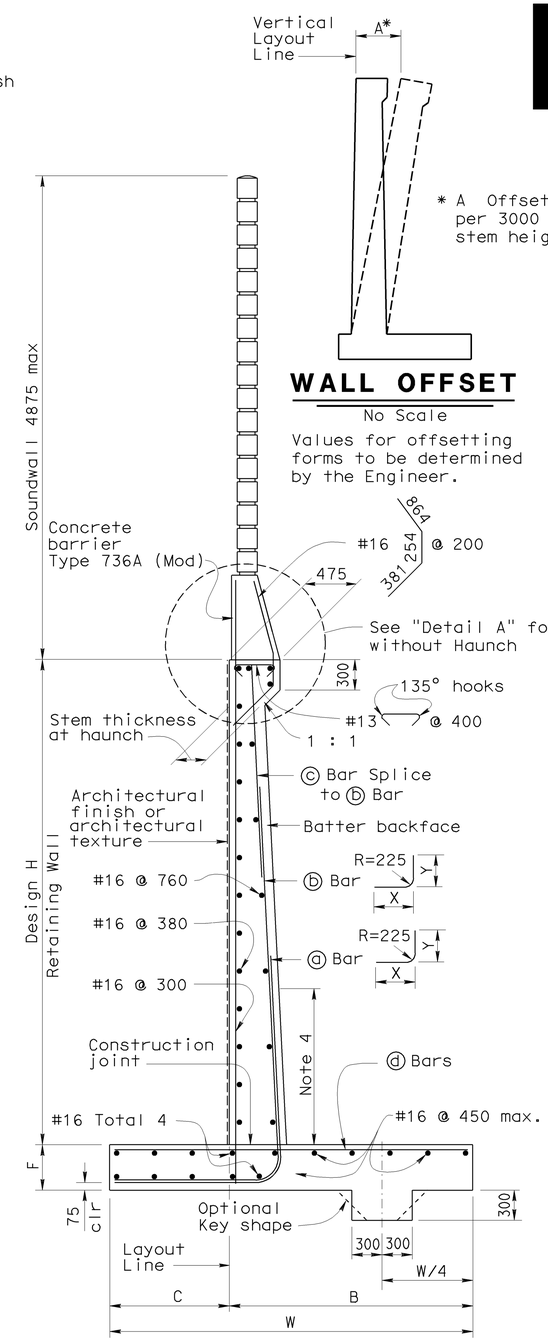

WALL OFFSET

No Scale

Values for offsetting forms to be determined by the Engineer.

* A Offset = 12 mm per 3000 mm of wall stem height

SPREAD FOOTING SECTION

No Scale

DESIGN DATA

DESIGN: Load Factor Design (LFD)

CONCRETE: Reinforced Concrete, f'c = 25 MPa
fy = 420 MPa

LOADING CASE:
Level ground with 11.5 KPa Live Load Surcharge and 4875 mm Soundwall

Seismic Load = 0.3 Dead Load
Wind Load = 1435 Pa
Dead Load of Soundwall = 20.6 kN/m
Dead Load of Barrier = 5.4 kN/m

SEISMIC LOAD: SOIL
Kh = 0.3g
Kv = 0.0
Kae : Mononobe-Okabe Method

SOIL: $\emptyset = 34°$ $\gamma = 19\ kN/m^3$
Equivalent fluid pressure:
= 5.6 KPa/m for determination of toe pressure
= 4.2 KPa/m for determination of heel pressure

LOAD COMBINATIONS:

EXTERNAL STABILITY: (For Overturning, Sliding)

Group 1: D + E + SC
Group 2 : D + E + SC + W
Group 3 : D + PYM

INTERNAL STABILITY (LFD): (For Member Design)

Group A : βD + 1.7E + 1.7SC
Group B : βD + 1.7E + 1.3W
Group C (stem) : 1.0D + 1.0E + 1.0EQD + 1.0EQE
Group C (footing) : D + PYM

Where : β = 1.0 or 1.3 whichever controls design
D = Dead Load
E = Lateral Earth Pressure
SC = Live Load Surcharge
W = Wind Load
EQD = Seismic Dead Load
EQE = Seismic Lateral Earth Pressure
PYM = Probable Yield Moment (1.3 x Nominal Yield Moment of Stem)

ALTERNATIVE A: (CONSTANT TOP OF WALL THICKNESS) TABLE OF REINFORCING STEEL DIMENSIONS AND DATA

	Stem With Haunch													
Design H	1800	2400	3000	3600	4200	4800	5500	6100	6700	7300	7900	8500	9100	9800
W	2300	2450	2650	3000	3300	3650	3950	4350	4650	5000	5650	6000	6450	6850
C	850	850	900	1000	1100	1200	1300	1450	1500	1650	1900	2050	2200	2350
B	1500	1600	1750	2000	2200	2450	2650	2900	3150	3350	3750	3950	4250	4500
F Spread Footing	380	380	380	380	380	450	450	550	600	700	850	900	1000	1150
Batter	0	100:4	100:4	100:4	100:4	100:4	100:4	100:4	100:4	100:5	100:6	100:7	100:8	100:8
Stem Thickness @ Haunch	305	305	305	305	305	305	305	305	305	305	305	305	305	305
ⓐ Bars				#19@450**	#22@450**	#25@450**	#29@450**	#32@450**	#25@225*	#25@225*	#22@150*	#32@300**	#29@225*	#36@300**
X				Cont	Cont	Cont	Cont	Cont	Cont	Cont	Cont	Cont	Cont	Cont
Y				2400	2000	2300	2600	2900	2900	3350	3500	3950	4250	4700
ⓑ Bars	#16@300	#16@300	#16@225	#19@450**	#22@450**	#25@450**	#29@450**	#32@450**	#25@225*	#25@225*	#22@150*	#32@300**	#29@225*	#36@300**
X	Cont	Cont	Cont	Cont	Cont	Cont	Cont	Cont	Cont	1700	2000	2150	2450	2600
Y	Cont	Cont	Cont	Cont	3200	3950	4550	5350	5950	6400	5650	5800	7750	7150
ⓒ Bars					#19@450	#19@450	#19@450	#19@450	#19@450	#19@450	#19@300	#22@300	#22@450	#22@300
ⓓ Bars	#16@300	#16@300	#16@300	#16@225	#19@225	#19@225	#19@150	#25@225	#25@225	#25@225	#22@150	#22@150	#29@225	#29@225
Ultimate Bearing Capacity Req'd Kpa	220	265	290	315	350	390	430	475	540	585	600	640	675	740

ALTERNATIVE B: (VARIABLE TOP OF WALL THICKNESS) TABLE OF REINFORCING STEEL DIMENSIONS AND DATA

	Stem With Haunch						Stem Without Haunch						
Design H	2400	3000	3600	4200	4800	5500	6100	6700	7300	7900	8500	9100	9800
W	2450	2600	2800	3100	3450	3950	4200	4900	5000	5650	6100	6250	6650
C	850	850	900	1050	1150	1300	1400	1600	1650	1900	2050	2050	2300
B	1600	1750	1900	2050	2300	2650	2800	3300	3350	3750	4050	4200	4350
F Spread Footing	380	380	380	380	450	450	550	600	700	850	900	1000	1050
Batter	0	0	0	0	0	0	0	0	0	100:2	100:4	100:4	100:4
Stem Thickness @ Top							475	610	610	610	610	610	610
Stem Thickness @ Haunch	305	305	305	305	380	380							
ⓐ Bars			#19@300**	#16@150*	#29@450**	#29@300**	#29@300**	#29@300**	#22@150*	#22@150*	#22@150*	#29@225*	#36@300**
X			Cont	Cont	Cont	Cont	Cont	Cont	Cont	Cont	Cont	Cont	Cont
Y			1700	1700	2600	2600	2600	2600	2900	3350	3800	4100	4400
ⓑ Bars	#16@225	#19@225	#19@300**	#16@150*	#29@450**	#29@300**	#29@300**	#29@300**	#22@150*	#22@150*	#22@150*	#29@225*	#36@300**
X	Cont	Cont	Cont	Cont	Cont	Cont	Cont	Cont	1700	1850	2300	2300	2450
Y	Cont	Cont	Cont	Cont	3500	3500	3650	3650	5350	6100	6550	7300	7300
ⓒ Bars					#22@450	#22@300	#22@300	#22@300	#19@300	#19@300	#19@300	#22@450	#22@300
ⓓ Bars	#16@300	#16@225	#16@225	#19@225	#19@225	#29@300	#29@300	#22@150	#19@150	#22@150	#22@150	#29@225	#29@225
Ultimate Bearing Capacity Req'd Kpa	265	310	350	365	430	430	510	505	585	605	640	740	770

ALL DIMENSIONS ARE IN MILLIMETERS UNLESS OTHERWISE SHOWN

STANDARD DRAWING

RELEASE DATE 2/25/03	DESIGN BY Madon Sah	CHECKED Overcomer Hor	RELEASED BY
	DETAILS BY A R Dudsak	CHECKED J C Moese	
FILE NO. xs14-220	SUBMITTED BY Overcomer Hor	DRAWING DATE 2/94	OFFICE CHIEF

STATE OF CALIFORNIA DEPARTMENT OF TRANSPORTATION

DIVISION OF ENGINEERING SERVICES

BRIDGE NO.

KILOMETER POST

RETAINING WALL TYPE 1SWB

DS OSD 2147A (METRIC) (REV. X/XX/XX)

ORIGINAL SCALE IN MILLIMETERS FOR REDUCED PLANS 0 10 20 30 40 50 60 70 80 90 100

CU
EA

DISREGARD PRINTS BEARING EARLIER REVISION DATES

REVISION DATES (PRELIMINARY STAGE ONLY) SHEET OF

USERNAME => jsanchez

xs14-220.dgn

DATE PLOTTED => 16-JAN-2004 TIME PLOTTED => 14:43