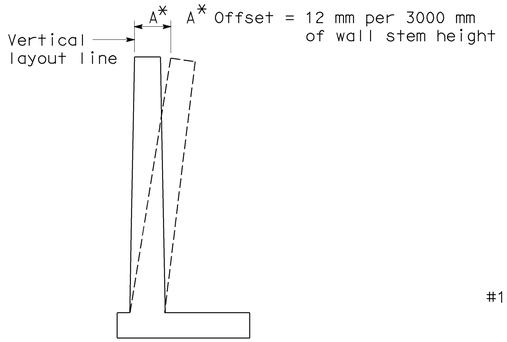

WALL OFFSET

NO SCALE

Values for offsetting forms to be determined by the engineer

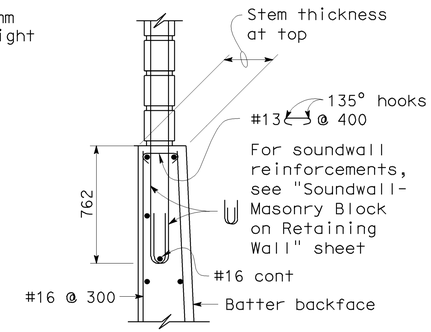

DETAIL A

NO SCALE

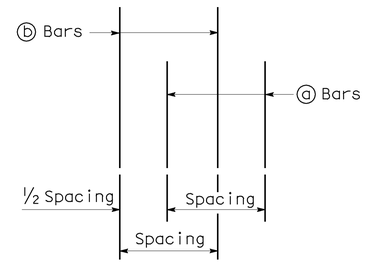

DETAIL B

NO SCALE

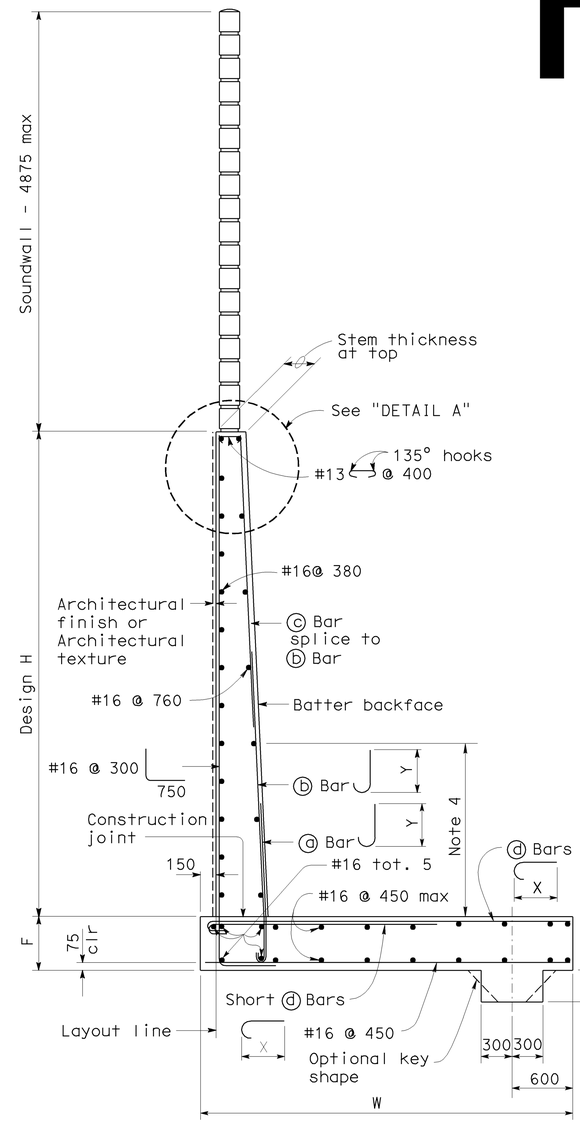

SPREAD FOOTING SECTION

NO SCALE

Cont = Continuous

* = ⓐ&ⓑ bars; short ⓓ&ⓓ bars are bundled together.

** = Alternate ⓐ&ⓑ bars as shown in "Detail B". Alternate short ⓓ&ⓓ bars.

ALTERNATIVE A: (CONSTANT TOP OF WALL THICKNESS) TABLE OF REINFORCING STEEL DIMENSIONS AN DATA

Design H	1800	2400	3000	3600	4200	4800	5500	6100	6700	7300	7900	8500	9100	9800
W	2600	2600	2800	3050	3450	3750	4050	4400	4800	5200	5650	6100	6500	6950
F Spread Ftg.	400	400	400	450	450	550	600	600	700	750	900	1000	1150	1200
Batter	100:0	100:4	100:4	100:4	100:4	100:4	100:4	100:4	100:4	100:5	100:6	100:7	100:8	100:8
Stem Thickness @ Top	305	305	305	305	305	305	305	305	305	305	305	305	305	305
ⓐ Bars				#19 @ 450**	#22 @ 450**	#25 @ 450**	#29 @ 450**	#32 @ 450**	#25 @ 225*	#25 @ 225*	#22 @ 150*	#32 @ 300**	#29 @ 225*	#36 @ 300**
Y				2450	2000	2300	2450	2750	2900	3350	3500	4000	4300	4750
ⓑ Bars	#16 @ 300	#16 @ 300	#16 @ 225	#19 @ 450**	#22 @ 450**	#25 @ 450**	#29 @ 450**	#32 @ 450**	#25 @ 225*	#25 @ 225*	#22 @ 150*	#32 @ 300**	#29 @ 225*	#36 @ 300**
Y	Cont	Cont	Cont	Cont	3200	4000	4600	5350	5950	6400	5650	5800	7800	7200
ⓒ Bars					#19 @ 450	#19 @ 450	#19 @ 450	#19 @ 450	#19 @ 450	#19 @ 450	#19 @ 300	#22 @ 300	#22 @ 450	#22 @ 300
Short ⓓ Bars	#16 @ 300	#16 @ 225	#19 @ 225	#22 @ 450**	#25 @ 450**	#25 @ 450**	#29 @ 450**	#32 @ 450**	#25 @ 225*	#25 @ 225*	#22 @ 150*	#32 @ 300*	#29 @ 225*	#36 @ 300**
X	Cont	Cont	Cont	1700	2000	2300	2450	2600	2900	3200	3500	3800	4100	4600
ⓓ Bars				#22 @ 450**	#25 @ 450**	#25 @ 450**	#29 @ 450**	#32 @ 450**	#25 @ 225*	#25 @ 225*	#22 @ 150*	#32 @ 300*	#29 @ 225*	#36 @ 300**
X				Cont	Cont	Cont	Cont	Cont	Cont	Cont	Cont	Cont	Cont	Cont
Ultimate bearing capacity required KPa	300	375	420	495	545	630	720	775	850	930	1010	1075	1170	1235

ALTERNATIVE B: (VARIABLE TOP OF WALL THICKNESS) TABLE OF REINFORCING STEEL DIMENSIONS AN DATA

Design H	2400	3000	3600	4200	4800	5500	6100	6700	7300	7900	8500	9100	9800
W	2600	2750	2950	3200	3800	4050	4350	4950	5200	5700	6150	6500	6850
F Spread Ftg.	400	400	400	400	450	450	550	700	700	850	1000	1150	1150
Batter	0	0	0	0	0	0	0	0	0	100:2	100:4	100:4	100:4
Stem Thickness @ Top	305	305	305	305	380	380	460	610	610	610	610	610	610
ⓐ Bars			#19 @ 300**	#16 @ 150*	#25 @ 300**	#25 @ 225*	#29 @ 300**	#29 @ 300**	#22 @ 150*	#22 @ 150*	#22 @ 150*	#29 @ 225*	#36 @ 300**
Y			1700	1700	1850	2000	2450	2600	2900	3350	3800	4100	4400
ⓑ Bars	#16 @ 225	#19 @ 225	#19 @ 300**	#16 @ 150*	#25 @ 300**	#25 @ 225*	#29 @ 300**	#29 @ 300**	#22 @ 150*	#22 @ 150*	#22 @ 150*	#29 @ 225*	#36 @ 300**
Y	Cont	Cont	Cont	Cont	2600	3350	3350	3500	5200	5950	6550	7300	7300
ⓒ Bars					#19 @ 300	#22 @ 450	#22 @ 300	#22 @ 300	#19 @ 300	#19 @ 300	#19 @ 300	#22 @ 450	#22 @ 300
Short ⓓ Bars	#16 @ 225	#19 @ 225	#22 @ 450**	#16 @ 150*	#25 @ 300**	#25 @ 225*	#29 @ 300**	#29 @ 300**	#22 @ 150*	#29 @ 150*	#29 @ 150*	#29 @ 225*	#25 @ 150*
X	Cont	Cont	1850	1700	2150	2600	2750	3050	3350	3650	3950	4250	4600
ⓓ Bars			#22 @ 450**	#16 @ 150*	#25 @ 300**	#25 @ 225*	#29 @ 300**	#29 @ 300**	#22 @ 150*	#29 @ 150*	#29 @ 150*	#29 @ 225*	#25 @ 150*
X			Cont	Cont	Cont	Cont	Cont	Cont	Cont	Cont	Cont	Cont	Cont
Ultimate bearing capacity required KPa	375	430	495	565	605	685	775	830	915	985	1070	1175	1235

Caltrans Metric

DIST.	COUNTY	ROUTE	KILOMETER POST TOTAL PROJECT	SHEET NO.	TOTAL SHEETS

REGISTERED ENGINEER - CIVIL

PLANS APPROVAL DATE

REGISTERED PROFESSIONAL ENGINEER No. Exp. CIVIL STATE OF CALIFORNIA

The State of California or its officers or agents shall not be responsible for the accuracy or completeness of electronic copies of this plan sheet.

DESIGN DATA

DESIGN: Load Factor Design (LFD)

CONCRETE: Reinforced Concrete, f'c = 25 MPa
fy = 420 MPa

LOADING CASE:
Level ground with 11.5 KPa Live Load
Surcharge and 4875 mm Soundwall

Seismic Load = 0.3 Dead Load
Wind Load = 1435 Pa
Dead Load of Soundwall = 20.6 kN/m

SEISMIC LOAD: SOIL
Kh = 0.3g
Kv = 0.0
Kae : Mononobe-Okabe Method

SOIL: ϕ = 34° γ = 19 kN/m^3
Equivalent fluid pressure:
= 5.6 KPa/m for determination of toe pressure
= 4.2 KPa/m for determination of heel pressure

LOAD COMBINATIONS:

EXTERNAL STABILITY:

Group 1 : D + E + SC
Group 2 : D + E + SC + W
Group 3 : D + PYM

INTERNAL STABILITY:(LFD)

Group A : βD + 1.7E + 1.7SC
Group B : βD + 1.7E + 1.3W
Group C (stem) : 1.0D + 1.0E + 1.0EQD + 1.0EQE
Group C (footing) : D + PYM

Where : β = 1.0 or 1.3 whichever controls design
D = Dead Load
E = Lateral Earth Pressure
SC = Live Load Surcharge
W = Wind Load
EQD = Seismic Dead Load
EQE = Seismic Lateral Earth Pressure
PYM = Probable Yield Moment (1.3 x Nominal Yield Moment of Stem)

GENERAL NOTES

1. For soundwall and retaining wall architectural finish or texture, see details elsewhere in project plans.
2. For details not shown and drainage notes, see B3-8
3. Footing cover, 450 mm minimum.
4. Limit of no splicing rebars = H/3
5. Increasing stem thickness not permitted.

ALL DIMENSIONS ARE IN MILLIMETERS UNLESS OTHERWISE SHOWN

STANDARD DRAWING

RELEASE DATE 2/25/03	DESIGN	BY Madon Sah	CHECKED Overcomer Hor	RELEASED BY
	DETAILS	BY A R Dudsak	CHECKED J C Moese	
FILE NO. xs14-340	SUBMITTED	BY Overcomer Hor	DRAWING DATE 4/01	OFFICE CHIEF

STATE OF CALIFORNIA DEPARTMENT OF TRANSPORTATION

DIVISION OF ENGINEERING SERVICES

BRIDGE NO.

KILOMETER POST

RETAINING WALL TYPE 5SW

DS OSD 2147A (METRIC) (REV. X/XX/XX)

ORIGINAL SCALE IN MILLIMETERS FOR REDUCED PLANS 0 10 20 30 40 50 60 70 80 90 100

CU
EA

DISREGARD PRINTS BEARING EARLIER REVISION DATES

REVISION DATES (PRELIMINARY STAGE ONLY) SHEET OF

USERNAME => jsanchez

xs14-340.dgn

DATE PLOTTED => 16-JAN-2004 TIME PLOTTED => 14:45