DIST.	COUNTY	ROUTE	KILOMETER POST TOTAL PROJECT	SHEET NO.	TOTAL SHEETS

Caltrans Metric

REGISTERED ENGINEER - CIVIL

PLANS APPROVAL DATE

REGISTERED PROFESSIONAL ENGINEER No. Exp. CIVIL STATE OF CALIFORNIA

The State of California or its officers or agents shall not be responsible for the accuracy or completeness of electronic copies of this plan sheet.

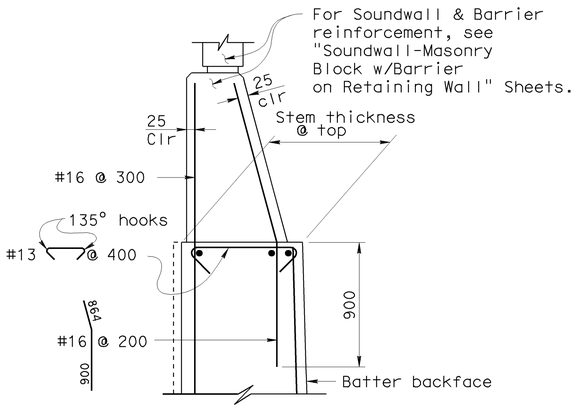

DETAIL A
WITHOUT HAUNCH
No Scale

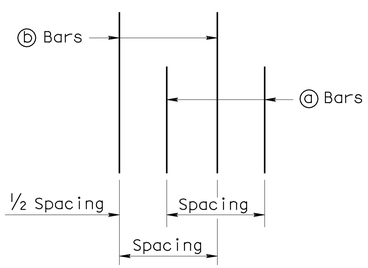

REBAR SPACING
No Scale

A* Offset = 12 mm per 3000 mm of wall stem height

WALL OFFSET
No Scale

Values for offsetting forms to be determined by engineer

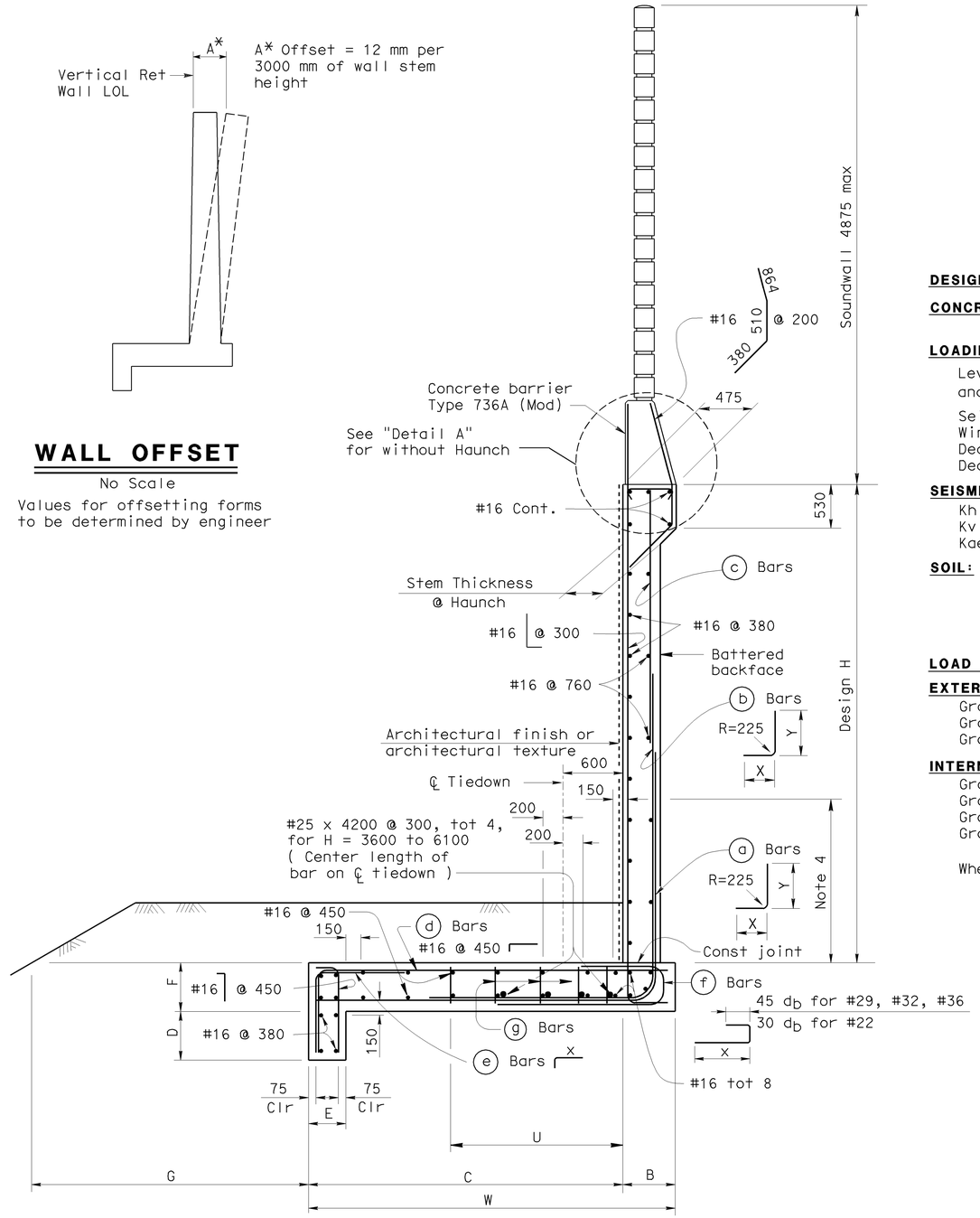

SPREAD FOOTING SECTION
No Scale

GENERAL NOTES

1. For soundwall and retaining wall architectural finish or texture, see details elsewhere in project plans.
2. For Details not shown and drainage notes, see B3-8
3. Footing coverage, 600 mm minimum.
4. Limit of no splicing rebars = H/3 .
5. Increasing stem thickness not permitted.
6. Place footing key concrete against undisturbed material.
7. Shift ⓐ bars, ⓑ bars, and ⓒ bars as required to clear formed hole for tiedown.
8. No reinforcements in footing key for H=2400 to H=3600.
9. Maximum distance from ℄ tiedown to edge of footing = 0.4(S).

DESIGN DATA

DESIGN: Load Factor Design (LFD)

CONCRETE: Reinforced Concrete, f'c = 25 MPa
fy = 420 MPa

LOADING CASE:

Level ground with 11.5 KPa live load surcharge and 4875 mm Soundwall

Seismic Load	= 0.3 Dead Load
Wind Load	= 1435 Pa
Dead Load of Soundwall	= 20.6 kN/m
Dead Load of Barrier	= 6.8 kN/m

SEISMIC LOAD: SOIL

Kh = 0.3g
Kv = 0.0
Kae : Mononobe-Okabe Method

SOIL: $\phi = 34°$ $\gamma = 19\ kN/m^3$
Equivalent fluid pressure:
STATIC = 5.6 KPa/m for determination of toe pressure
SEISMIC = Coulomb's Theory

LOAD COMBINATIONS:

EXTERNAL STABILITY:

Group 1 :	D + E + SC + 0.75 T (F.S. Sliding > 1.5)
Group 2 :	D + E + SC + W + 0.75 T (F.S. Sliding > 1.2)
Group 3 :	D + PYM + P_{av} + V + 1.0 T (F.S. Sliding > 1.0)

INTERNAL STABILITY: (LFD)

Group A :	βD + 1.7 E + 1.7 SC + 0.75 T
Group B :	βD + 1.7 E + 1.3 W + 0.75 T
Group C :(Stem)	1.0 D + 1.0 E + 1.0 EQD + 1.0 EQE
Group C :(Footing)	D + PYM + P_{av} + V + 1.0 T

Where :
- β = 1.0 or 1.3 whichever controls design
- D = Dead Load
- E = Lateral Earth Pressure
- P_{av} = Vertical Earth Pressure
- SC = Live Load Surcharge
- W = Wind Load
- EQD = Seismic Dead Load
- EQE = Seismic Lateral Earth Pressure
- PYM = Probable Yield Moment (1.3 x Nominal Yield Moment of Stem)
- V = Possible Shear at Base of Stem associated with Probable Yield Moment
- T = Design Force for Vertical Tiedown

ALL DIMENSIONS ARE IN MILLIMETERS UNLESS OTHERWISE SHOWN

DATE PLOTTED => 16-JAN-2004 TIME PLOTTED => 14:48

STANDARD DRAWING				
RELEASE DATE 7/17/03	DESIGN BY Madon Sah	CHECKED Lisa Tanaka	RELEASED BY	
FILE NO. xs14-390-1	DETAILS BY M Slayton	CHECKED Overcomer Hor		
	SUBMITTED BY Overcomer Hor	DRAWING DATE 2/94	OFFICE CHIEF	

STATE OF CALIFORNIA DEPARTMENT OF TRANSPORTATION

DIVISION OF ENGINEERING SERVICES

BRIDGE NO.

KILOMETER POST

RETAINING WALL TYPE 7SWB - DETAILS NO. 1

DS OSD 2147A (METRIC) (REV. X/XX/XX)

ORIGINAL SCALE IN MILLIMETERS FOR REDUCED PLANS 0 10 20 30 40 50 60 70 80 90 100

CU
EA

DISREGARD PRINTS BEARING EARLIER REVISION DATES

REVISION DATES (PRELIMINARY STAGE ONLY) SHEET OF

USERNAME => jsanchez

xs14-390-1.dgn