DIST.	COUNTY	ROUTE	KILOMETER POST TOTAL PROJECT	SHEET NO.	TOTAL SHEETS

Caltrans Metric

REGISTERED ENGINEER - CIVIL

PLANS APPROVAL DATE

REGISTERED PROFESSIONAL ENGINEER No. Exp. CIVIL STATE OF CALIFORNIA

The State of California or its officers or agents shall not be responsible for the accuracy or completeness of electronic copies of this plan sheet.

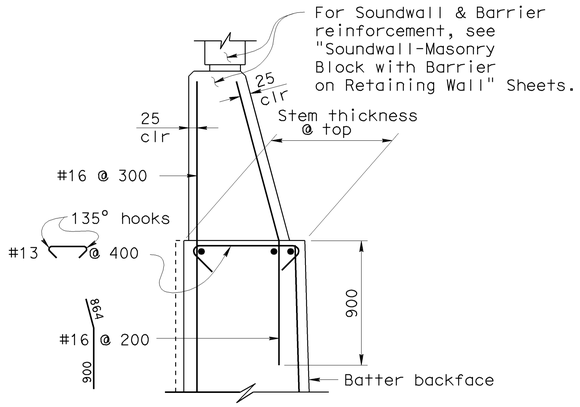

DETAIL A
WITHOUT HAUNCH
No Scale

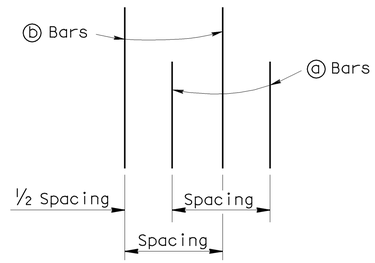

DETAIL B
No Scale

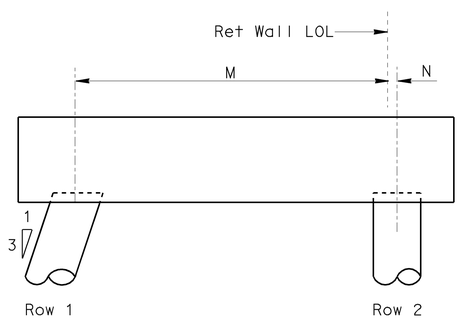

CONFIGURATION I
No Scale

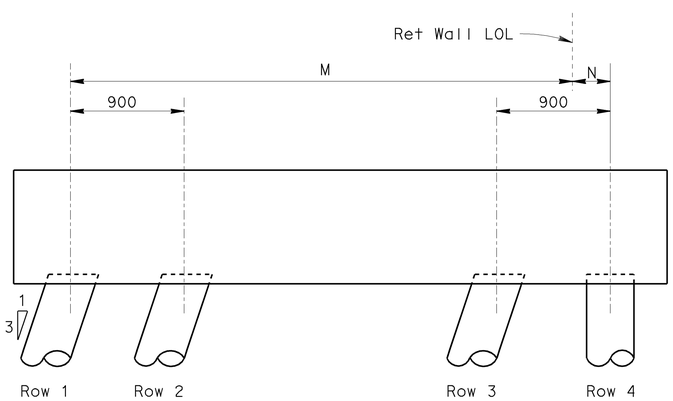

CONFIGURATION II
No Scale

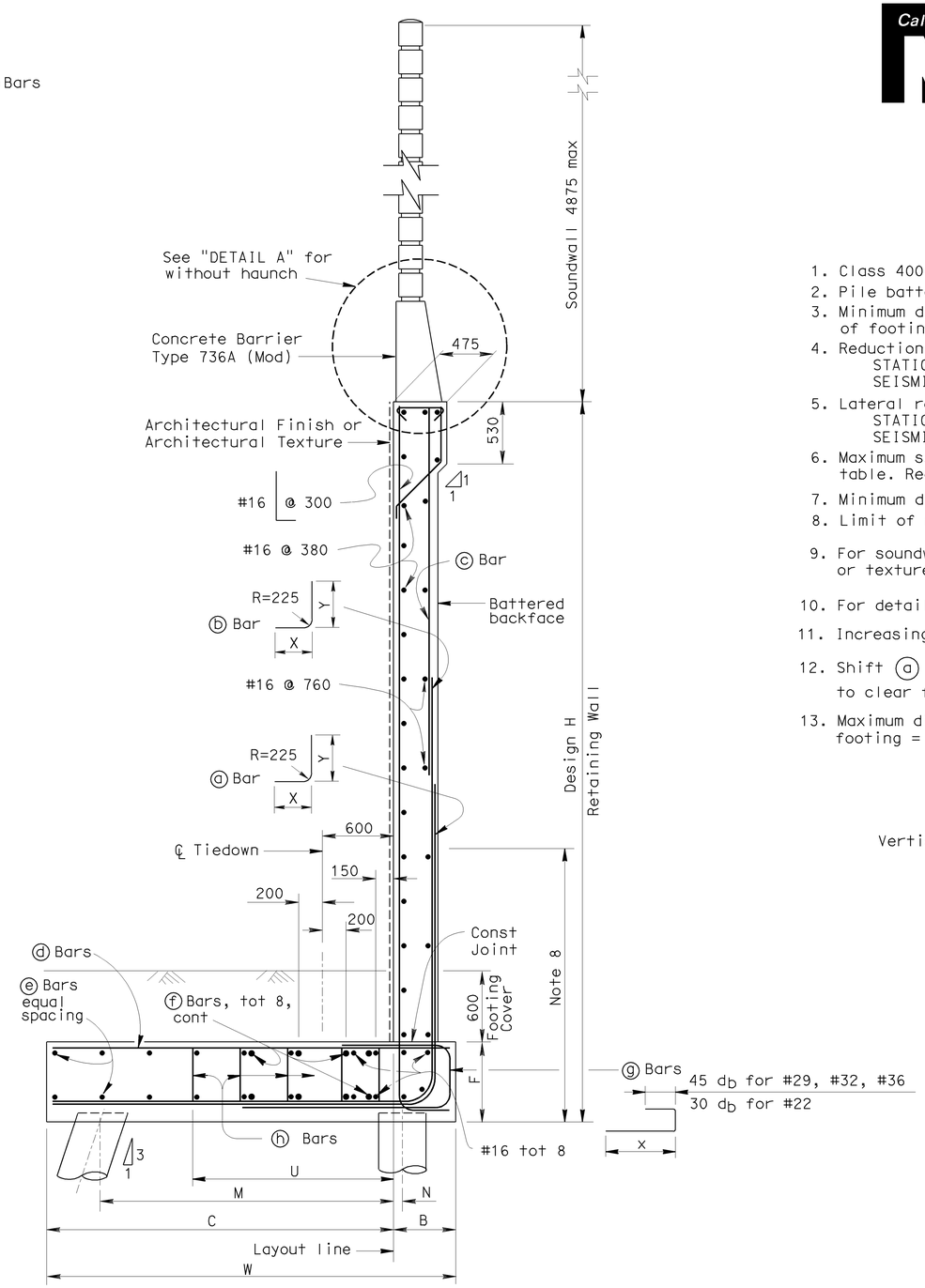

PILE FOOTING SECTION
No Scale

GENERAL NOTES

1. Class 400 kN Concrete Piles were used for the design.
2. Pile batter shown are 1:3.
3. Minimum distance between center of pile and edge of footing is 450.
4. Reduction factors:
   STATIC: Ø = 0.75
   SEISMIC: Ø = 1.0
5. Lateral resistance of each pile:
   STATIC: = 130 kN
   SEISMIC: = 175 kN
6. Maximum spacing between piles is shown in the table. Reduce to suit the length of footing.
7. Minimum distance between any two piles is 900 mm.
8. Limit of no splicing for rebars = H/3.
9. For soundwall and retaining wall architectural finish or texture, see details elsewhere in project plans.
10. For details not shown and drainage notes, see B3-8 sheet.
11. Increasing stem thickness not permitted.
12. Shift ⓐ bars, ⓑ bars, and ⓒ bars as required to clear formed hole for tiedown.
13. Maximum distance from tiedown to edge of footing = 0.4 (S).

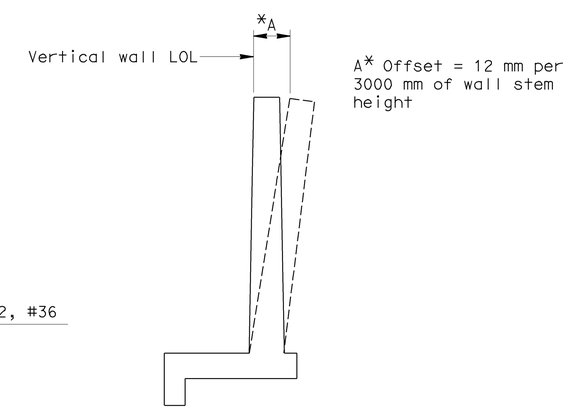

WALL OFFSET
No Scale

Values for offsetting forms to be determined by engineer

ALL DIMENSIONS ARE IN MILLIMETERS UNLESS OTHERWISE SHOWN

STANDARD DRAWING				
RELEASE DATE 8/8/03	DESIGN	BY Madon Sah	CHECKED Lisa Tandka	RELEASED BY
FILE NO. xs14-410-2	DETAILS	BY R. Lasat	CHECKED Overcomer Hor	OFFICE CHIEF
	SUBMITTED	BY Overcomer Hor	DRAWING DATE 12/94	

STATE OF CALIFORNIA DEPARTMENT OF TRANSPORTATION

DIVISION OF ENGINEERING SERVICES

BRIDGE NO.

KILOMETER POST

RETAINING WALL TYPE 7SWBP - DETAILS NO. 2

DS OSD 2147A (METRIC) (REV. X/XX/XX)

ORIGINAL SCALE IN MILLIMETERS FOR REDUCED PLANS 0 10 20 30 40 50 60 70 80 90 100

CU
EA

DISREGARD PRINTS BEARING EARLIER REVISION DATES

REVISION DATES (PRELIMINARY STAGE ONLY) SHEET OF

USERNAME => jsanchez

spec des br prj/misc/tony/xs sheet hold/xs31113.dgn

xs14-410-2.dgn

DATE PLOTTED => 16-JAN-2004 TIME PLOTTED => 14:50