DIST.	COUNTY	ROUTE	KILOMETER POST TOTAL PROJECT	SHEET NO.	TOTAL SHEETS

REGISTERED ENGINEER - CIVIL

PLANS APPROVAL DATE

REGISTERED PROFESSIONAL ENGINEER No. Exp. CIVIL STATE OF CALIFORNIA

The State of California or its officers or agents shall not be responsible for the accuracy or completeness of electronic copies of this plan sheet.

Caltrans Metric

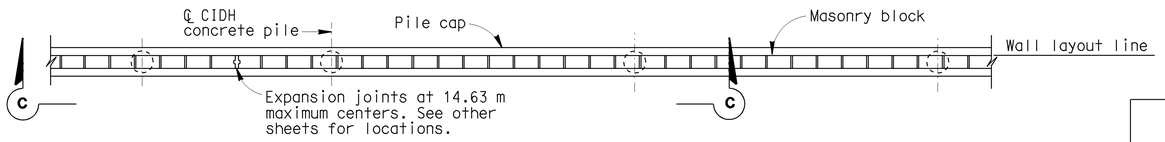

PLAN

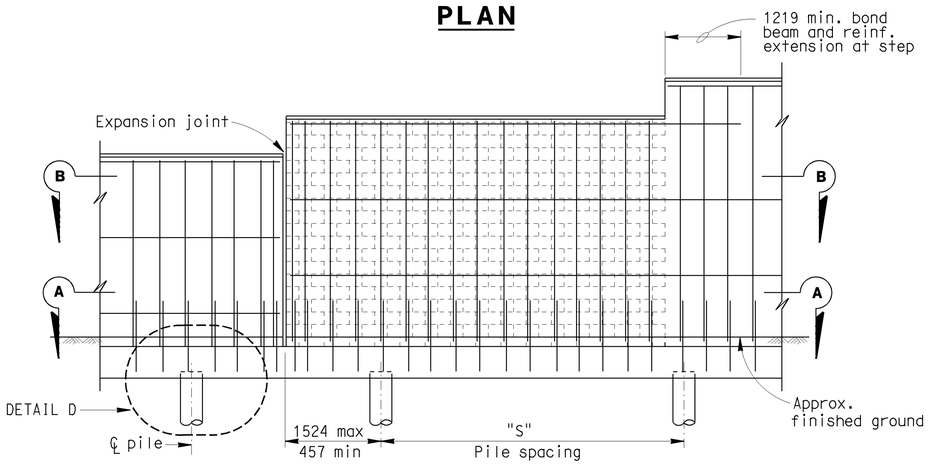

ELEVATION C-C

Note I : For details not shown,see "SOUNDWALL - MASONRY BLOCKS ON PILE CAP - DETAILS NO.2" and "DETAILS NO.3" sheets.

Note II : See "SOUNDWALL MASONRY BLOCK - MISCELLANEOUS DETAILS" sheet for other details.

SOUNDWALL REINFORCEMENT TABLE

Maximum "H"	ⓐ bars @ 406 max	ⓑ bars @ 406 max	"Y"	f'm (MPa)	Compressive Strength of CMU (MPa)	Maximum "H"
1829	#13	——	——	10.34	13.1	1829
2438	#13	——	——	10.34	13.1	2438
3048	#16	——	——	10.34	13.1	3048
3658	#19	#13	1829	13.79	19.31	3658
4267	#19	#13	2438	17.24	25.86	4267
4877	#19	#13	3048	17.24	25.86	4877

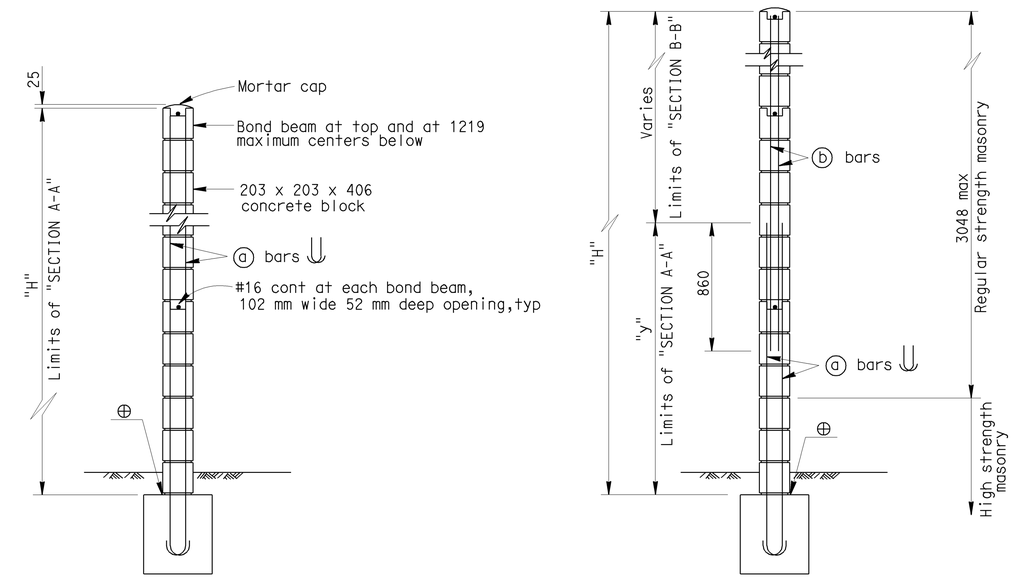

H=1829 THRU H=3048

For details not shown, see H=3658 thru H=4877

H=3658 THRU H=4877

For details not shown, see H=1829 thru H=3048

TYPICAL SECTION

⊕ Full mortar bed at bottom of wall

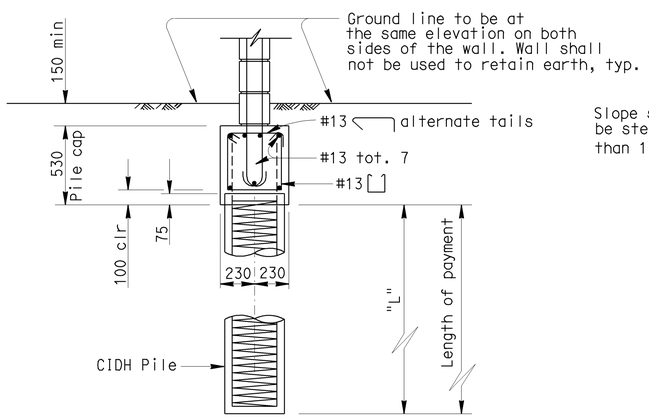

CASE 1

For details not shown, see Case 2
Level ground (±10%) on both sides of the soundwall

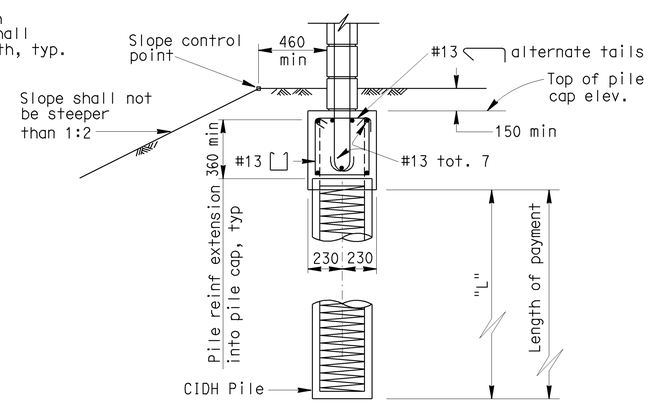

CASE 2

For details not shown, see Case 1
Level ground (±10%) on one side of the soundwall and sloping ground on the opposite side

PILE CAP SECTION

NO SCALE

ALL DIMENSIONS ARE IN MILLIMETERS UNLESS OTHERWISE SHOWN

STANDARD DRAWING				
RELEASE DATE 9/8/03	DESIGN BY D. DUNRUD	CHECKED W.C. WALKER	RELEASED BY	
FILE NO. xs15-020-1	DETAILS BY R. YEE	CHECKED W.C. WALKER	OFFICE CHIEF	
	SUBMITTED BY D. DUNRUD	DRAWING DATE 11/94		

STATE OF CALIFORNIA DEPARTMENT OF TRANSPORTATION

DIVISION OF ENGINEERING SERVICES

BRIDGE NO.

KILOMETER POST

SOUNDWALL - MASONRY BLOCK ON PILE CAP

DETAILS NO. 1

DS OSD 2147A (METRIC) (REV. 2/25/97)

ORIGINAL SCALE IN MILLIMETERS FOR REDUCED PLANS 0 10 20 30 40 50 60 70 80 90 100

CU
EA

DISREGARD PRINTS BEARING EARLIER REVISION DATES

REVISION DATES (PRELIMINARY STAGE ONLY) SHEET OF

USERNAME => jsanchez

xs15-020-1.dgn

DATE PLOTTED => 16-JAN-2004 TIME PLOTTED => 14:51