DIST.	COUNTY	ROUTE	KILOMETER POST TOTAL PROJECT	SHEET NO.	TOTAL SHEETS

REGISTERED ENGINEER - CIVIL

PLANS APPROVAL DATE

REGISTERED PROFESSIONAL ENGINEER No. Exp. CIVIL STATE OF CALIFORNIA

The State of California or its officers or agents shall not be responsible for the accuracy or completeness of electronic copies of this plan sheet.

Caltrans Metric

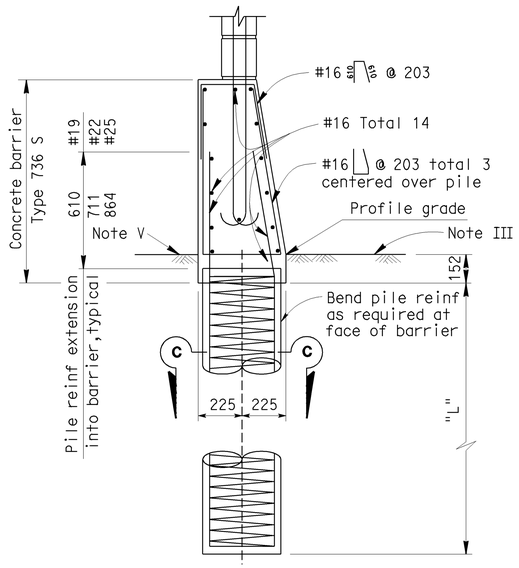

CASE 1

For details not shown,See Case 2
Level ground ±10% on both sides of barrier

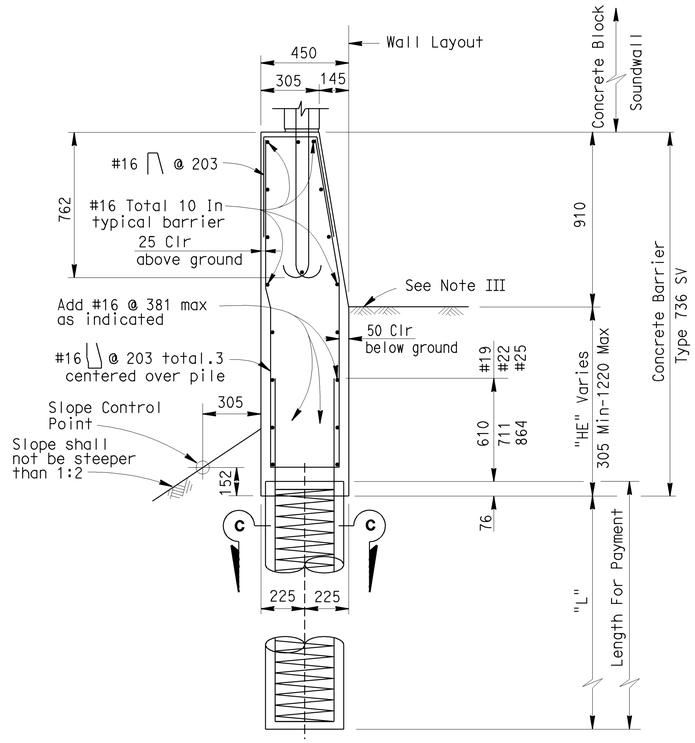

CASE 2

For details not shown,See Case 1
Level ground ±10% at the traffic side of barrier and sloping ground on the opposite side

BARRIER SECTIONS

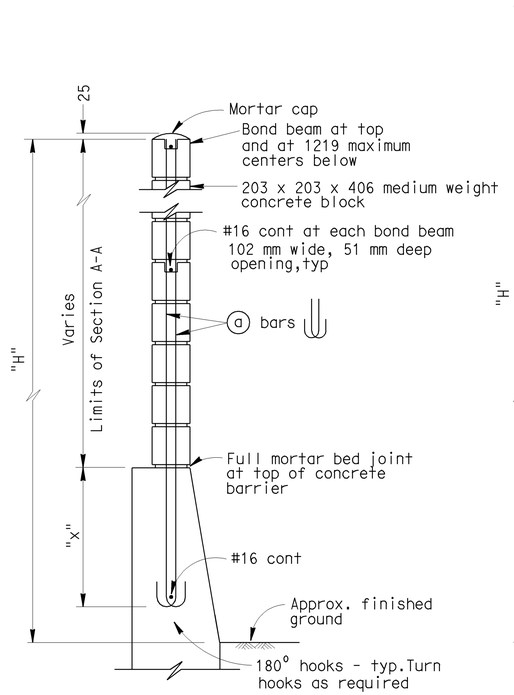

H=1930 THRU H=3150

For details not shown,see H=3760 thru 4980

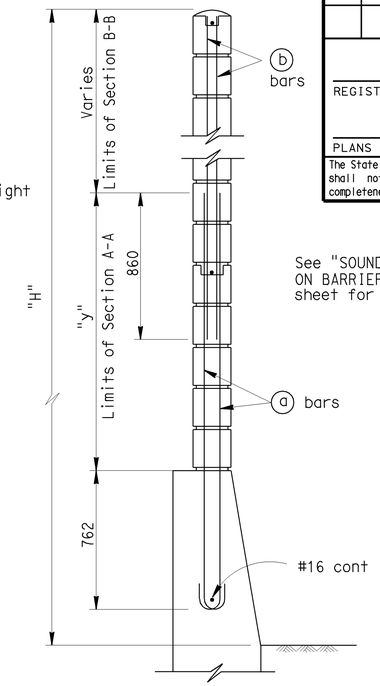

H=3760 THRU H=4980

For details not shown,see H=1930 thru H=3150

TYPICAL SECTIONS

See "SOUNDWALL - MASONRY BLOCK ON BARRIER -- DETAILS NO. 3" sheet for pile details.

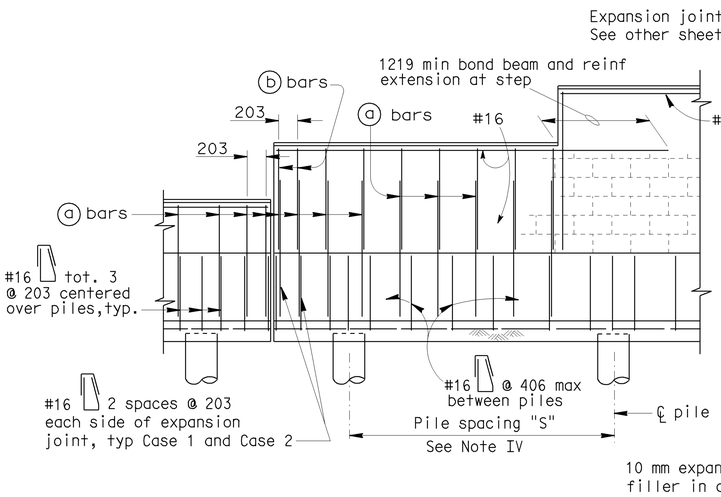

CASE 1

For details not shown,See Case 2

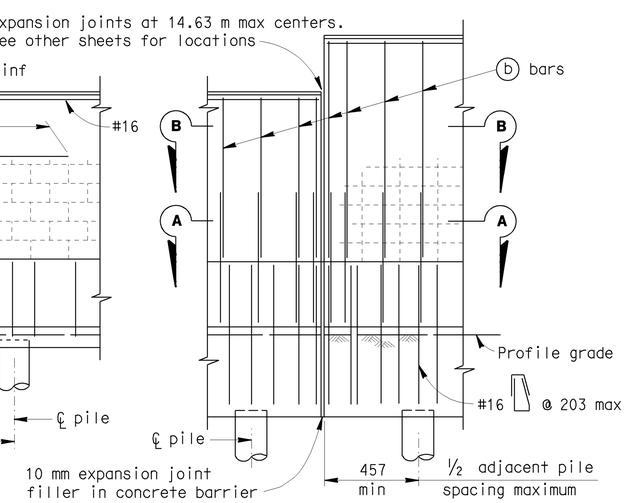

CASE 2

For details not shown,See Case 1

PART ELEVATIONS

Note I : Details shown are primarily to conform design of soundwalls to Type 736S and Type 736 SV Concrete Barriers. For soundwall details conforming with barriers see "SOUNDWALL - MASONRY BLOCK ON BARRIER - DETAILS NO. 2 and NO. 3" sheets.

Note II: For details not shown, see "SOUNDWALL-MASONRY BLOCK ON BARRIER--DETAILS NO. 2 and DETAILS NO. 3" sheets.

Note III: Slope ground at traffic side of barrier to drain. Maximum slope ±10%. See Std. Plan B11-56, Note D.

Note IV: Pile spacing may be varied but shall not exceed the tabular values. See "DETAILS NO. 3".

Note V: For Case 1-ground line to be at the same elevation on both sides of the barrier.Barrier shall not be used to retain earth.

Note VI: See "SOUNDWALL MASONRY BLOCK-MISCELLANEOUS DETAILS" sheet for other details.

SOUNDWALL REINFORCEMENT TABLE

Maximum H	a bars @ 406 max	b bars @ 406 max	"y"	f'm (MPa)	Compressive Strength of CMU (MPa)	Maximum H
1930	#13	———	———	10.34	13.1	1930
2540	#13	———	———	10.34	13.1	2540
3150	#13	———	———	10.34	13.1	3150
3759	#16	#13	1524	10.34	13.1	3759
4369	#19	#13	2134	10.34	13.1	4369
4978	#19	#13	2743	17.24	25.6	4978

GENERAL NOTES

Note A: For type of block, type of block bond and joint finish, see other sheets.

Note B: When blocks are laid in stacked bond, ladder type, galvanized joint reinforcement shall be provided. A minimum of 2 - 3.76 mm wires continuous at 1219 mm maximum to be used. Locate reinforcement in joints that are at the approximate midpoint between bond beams.

Note C: Horizontal joints shall be tooled concave or may be weathered.
Vertical joints shall be tooled concave or may be raked.

Note D: For intermediate wall heights (H), or barrier depths (HE), that are between the values given, use the tabular information for the next higher (H) or (HE).

Note E: Class 2 concrete to be used for the barrier.

Note F: Masonry strengths are listed in the "SOUNDWALL REINFORCEMENT TABLE".

Note G: Geotechnical Services should confirm the stability of slopes.

NO SCALE
ALL DIMENSIONS ARE IN MILLIMETERS UNLESS OTHERWISE SHOWN

STANDARD DRAWING

RELEASE DATE 9/8/03	DESIGN BY D. DUNRUD	CHECKED W.C. WALKER	RELEASED BY
FILE NO. xs15-110-1	DETAILS BY R. YEE	CHECKED W.C. WALKER	
	SUBMITTED BY D. DUNRUD	DRAWING DATE 9/00	OFFICE CHIEF

STATE OF CALIFORNIA
DEPARTMENT OF TRANSPORTATION

DIVISION OF ENGINEERING SERVICES

BRIDGE NO.
KILOMETER POST

SOUNDWALL - MASONRY BLOCK ON TYPE 736S/SV BARRIER

DETAILS NO. 1

DS OSD 2147A (METRIC) (REV. X/XX/XX)

ORIGINAL SCALE IN MILLIMETERS FOR REDUCED PLANS 0 10 20 30 40 50 60 70 80 90 100

CU
EA

DISREGARD PRINTS BEARING EARLIER REVISION DATES

REVISION DATES (PRELIMINARY STAGE ONLY) SHEET OF

USERNAME => jsanchez

xs15-110-1.dgn

DATE PLOTTED => 16-JAN-2004 TIME PLOTTED => 14:52