DIST.	COUNTY	ROUTE	KILOMETER POST TOTAL PROJECT	SHEET NO.	TOTAL SHEETS

Caltrans Metric

REGISTERED ENGINEER - CIVIL

PLANS APPROVAL DATE

REGISTERED PROFESSIONAL ENGINEER No. Exp. CIVIL STATE OF CALIFORNIA

The State of California or its officers or agents shall not be responsible for the accuracy or completeness of electronic copies of this plan sheet.

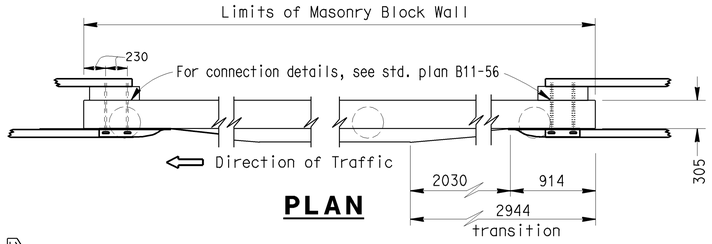

PLAN

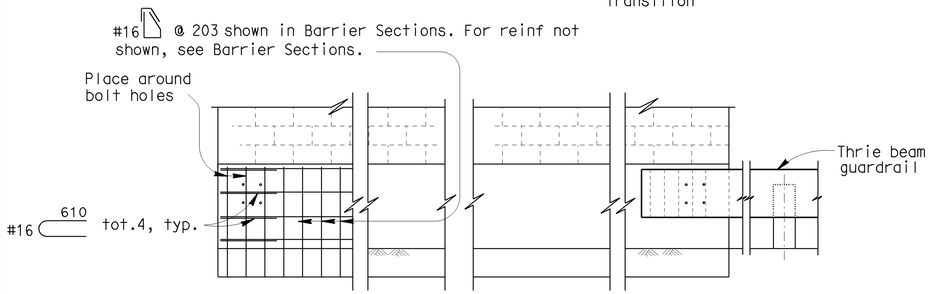

ELEVATION

METAL BEAM GUARDRAIL ANCHORAGE

For details not shown, see std. plan B11-56.

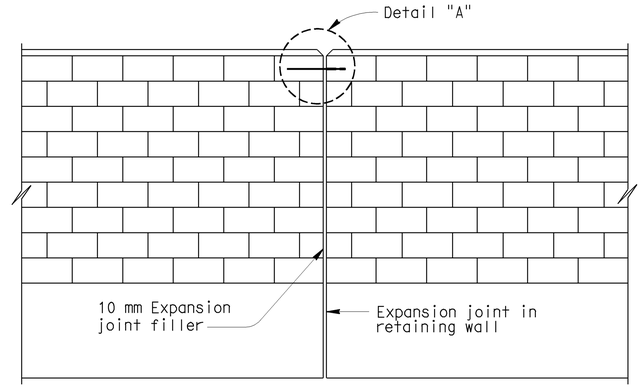

ALIGNMENT KEY DETAIL

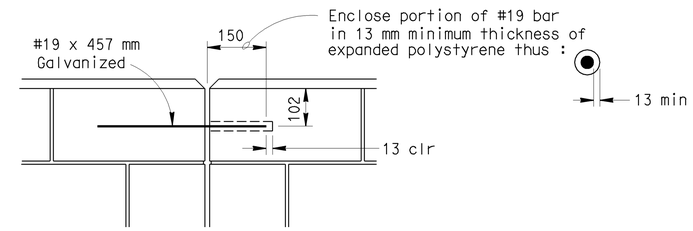

DETAIL A

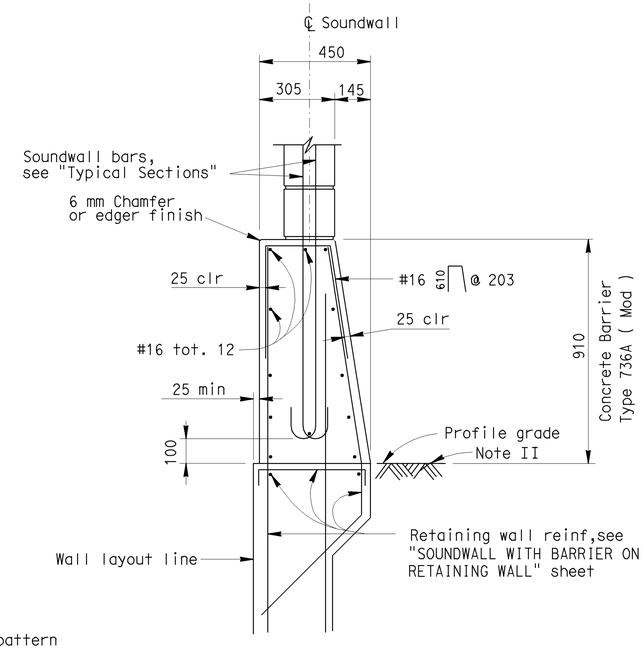

BARRIER SECTION

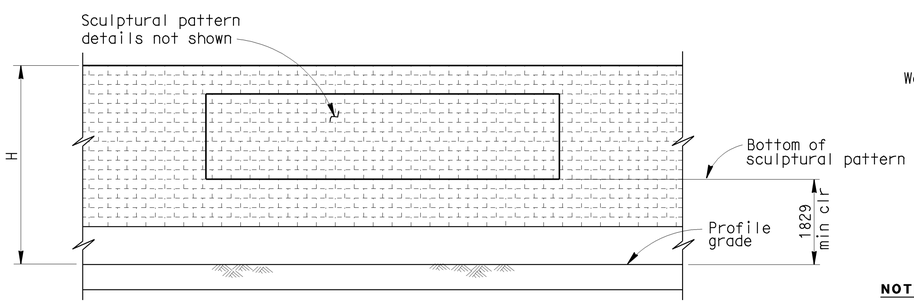

CLEARANCE DETAIL

DESIGN NOTES

DESIGN

Uniform Building Code,1997 Edition and the Bridge Design Specifications.

DESIGN WIND LOAD

1293 Pa

DESIGN SEISMIC LOAD

0.57 Dead load

REINFORCED CONCRETE

f'c = 22.408 Mpa
fy = 413.688 MPa

CONCRETE MASONRY

REGULAR STRENGTH	HIGH STRENGTH	
f'm = 10.34 MPa	f'm = 13.79 MPa	f'm = 17.24 MPa
f_b = 3.41 MPa	f_b = 4.55 MPa	f_b = 5.72 MPa
fs = 165.5 MPa	fs = 165.5 MPa	fs = 165.5 MPa
n = 25.8	n = 19.3	n = 15.5

LOAD FACTORS AND LOAD COMBINATIONS

Working Stress Design (WSD) Percentage of unit stress

Group 1: D + E + SC 100%
Group 2: D + W + SC + E 100%
Group 3: D + 0.71 EQD + E 100%

Where:

D = Dead load
E = Lateral earth pressure
SC = Live load surcharge
W = Wind load
EQD = Seismic dead load

Load Factor Design (LFD)

Group A: βD +1.7 E + 1.7 SC
Group B: βD +1.7 E + 1.3 W
Group C: βD +1.3 E + 1.0 EQE
Group D: βD +1.3 E + 1.0 EQD
Group E: βD +1.1 E + 0.85 (EQE + EQD)

Where : β = 0.9 or 1.2, whichever controls in design
D = Dead load
E = Lateral earth pressure
SC = Live load surcharge
W = Wind load
EQD = Seismic dead load
EQE = Seismic earth load

STRENGTH REDUCTION FACTORS, Ø

Reinforced concrete:
For flexure _____ Ø=0.90
For shear _____ Ø=0.85

Concrete masonry:
For flexure _____ Ø=0.80
For shear _____ Ø=0.60

Foundations :
See "RETAINING WALL WITH SOUNDWALL" sheets.

NOTES:

I : For details not shown,see "RETAINING WALL WITH SOUNDWALL" sheets.

II : Slope ground at traffic side of barrier to drain. Maximum slope ±10%. See Standard Plan B11-56, Note D.

NO SCALE

ALL DIMENSIONS ARE IN MILLIMETERS UNLESS OTHERWISE SHOWN

STANDARD DRAWING

RELEASE DATE 9/8/03	DESIGN BY D. DUNRUD	CHECKED W.C. WALKER	RELEASED BY	
FILE NO. xs15-130-2	DETAILS BY R. YEE	CHECKED W.C. WALKER	OFFICE CHIEF	
	SUBMITTED BY D. DUNRUD	DRAWING DATE 11/94		

DS OSD 2147A (METRIC) (REV. 2/25/97)

ORIGINAL SCALE IN MILLIMETERS FOR REDUCED PLANS 0 10 20 30 40 50 60 70 80 90 100

STATE OF CALIFORNIA DEPARTMENT OF TRANSPORTATION

DIVISION OF ENGINEERING SERVICES

CU EA

BRIDGE NO.

KILOMETER POST

SOUNDWALL WITH BARRIER ON RETAINING WALL - MASONRY BLOCK

DETAILS NO. 2

DISREGARD PRINTS BEARING EARLIER REVISION DATES

REVISION DATES (PRELIMINARY STAGE ONLY) SHEET OF

USERNAME => jsanchez

xs15-130-2.dgn

DATE PLOTTED => 16-JAN-2004 TIME PLOTTED => 14:55