DIST.	COUNTY	ROUTE	KILOMETER POST TOTAL PROJECT	SHEET NO.	TOTAL SHEETS

Caltrans Metric

REGISTERED ENGINEER - CIVIL

PLANS APPROVAL DATE

REGISTERED PROFESSIONAL ENGINEER No. Exp. CIVIL STATE OF CALIFORNIA

The State of California or its officers or agents shall not be responsible for the accuracy or completeness of electronic copies of this plan sheet.

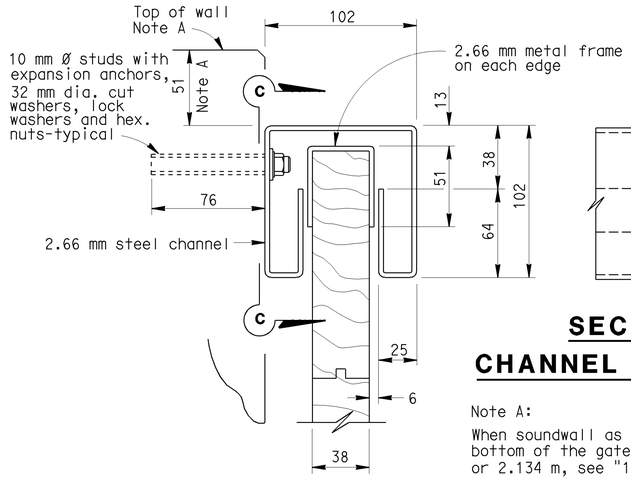

DETAIL "A"

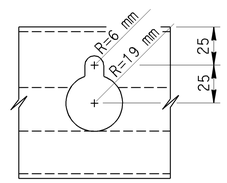

SECTION C-C
CHANNEL MOUNTING HOLE

Note A:

When soundwall as measured from the bottom of the gate opening exceeds 2.032 m or 2.134 m, see "1.524 m GATE DETAILS NO. 2" sheet.

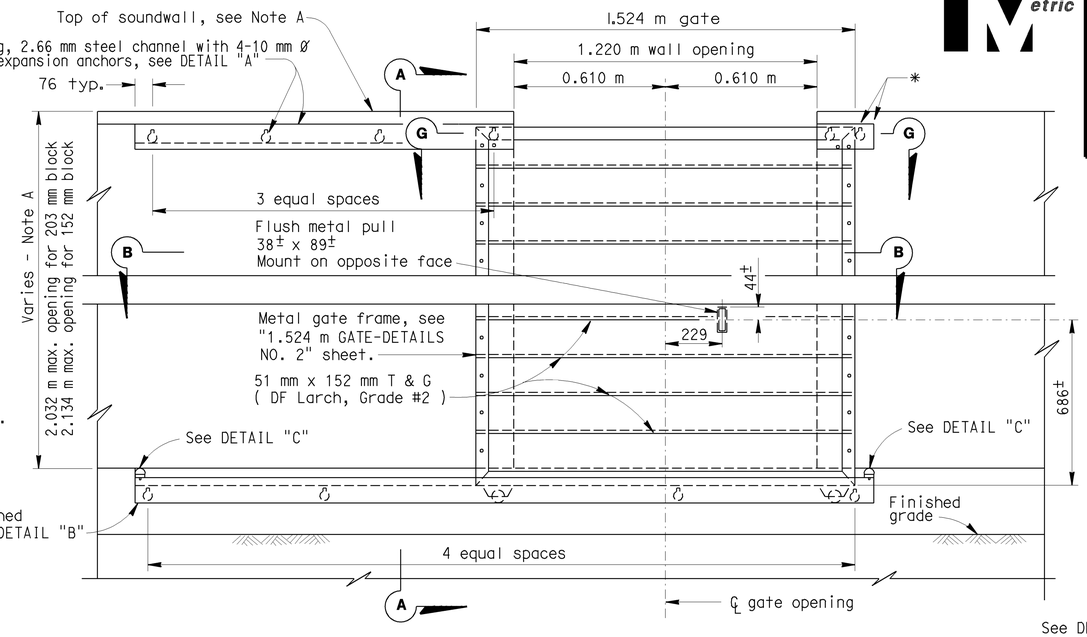

GATE ELEVATION - BACK

* 229 mm long channel attached with 2-10 mm Ø studs, see DETAIL "A"

Note:

Those blocks upon which the supporting steel channels are mounted shall be smooth faced on the mounting side

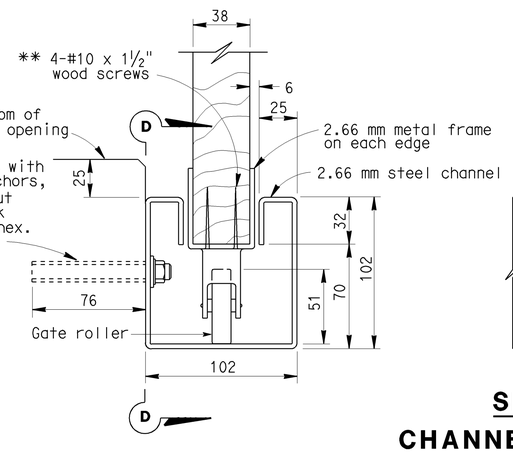

DETAIL "B"

** Wood screws are in U.S. Customary Units.

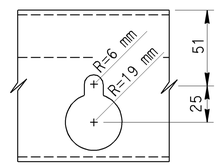

SECTION D-D
CHANNEL MOUNTING HOLE

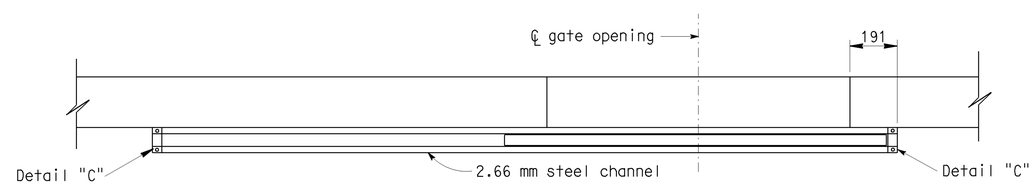

SECTION B-B

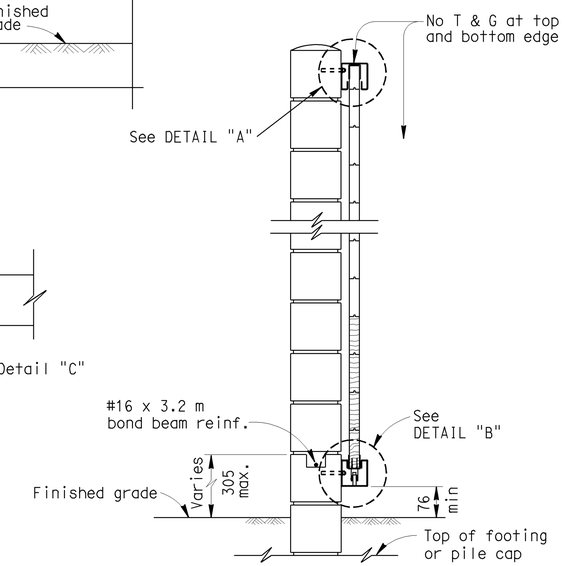

SECTION A-A

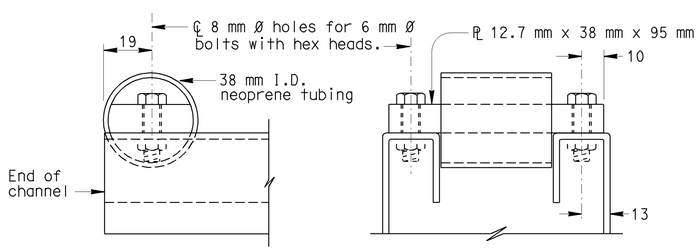

SIDE VIEW
END VIEW
DETAIL "C" STOP DETAIL

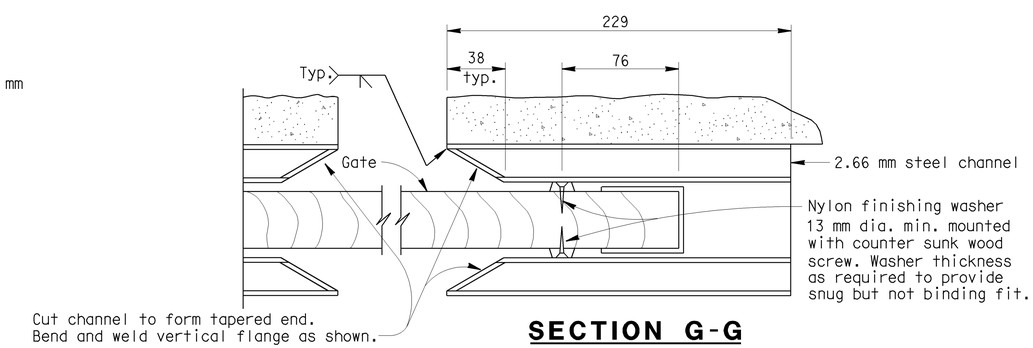

SECTION G-G

Note: For location of nylon finishing washers see "1.524 m GATE-DETAILS NO. 2" sheet.

NOTES:

All wood to be stained. All hardware to be galvanized. All structural metal to be galvanized after fabrication.

Gate mounted on sloping grade shall be oriented to be in closed position when at lower grade point.

Two masonry cells adjacent to each side of gate to be reinforced and grouted.

NO SCALE

ALL DIMENSIONS ARE IN MILLIMETERS UNLESS OTHERWISE SHOWN

STANDARD DRAWING					
RELEASE DATE 7/3/03	DESIGN	BY J. HAMAGUCHI	CHECKED D. DUNRUD	RELEASED BY	
FILE NO. xs15-220-1	DETAILS	BY R. YEE	CHECKED D. DUNRUD		
	SUBMITTED	BY D. DUNRUD	DRAWING DATE 11/82	OFFICE CHIEF	

STATE OF CALIFORNIA DEPARTMENT OF TRANSPORTATION

DIVISION OF ENGINEERING SERVICES

BRIDGE NO.

KILOMETER POST

SOUNDWALL - MASONRY BLOCK ON FOOTING OR PILE CAP - 1.524 m ACCESS GATE

DETAILS NO. 1

DS OSD 2147A (METRIC) (REV. 2/25/97)

ORIGINAL SCALE IN MILLIMETERS FOR REDUCED PLANS 0 10 20 30 40 50 60 70 80 90 100

CU EA

DISREGARD PRINTS BEARING EARLIER REVISION DATES

REVISION DATES (PRELIMINARY STAGE ONLY) SHEET OF

USERNAME => jsanchez

xs15-220-1.dgn

DATE PLOTTED => 16-JAN-2004 TIME PLOTTED => 14:56