DIST.	COUNTY	ROUTE	KILOMETER POST TOTAL PROJECT	SHEET NO.	TOTAL SHEETS

REGISTERED ENGINEER - CIVIL

PLANS APPROVAL DATE

REGISTERED PROFESSIONAL ENGINEER No. Exp. CIVIL STATE OF CALIFORNIA

The State of California or its officers or agents shall not be responsible for the accuracy or completeness of electronic copies of this plan sheet.

Caltrans Metric

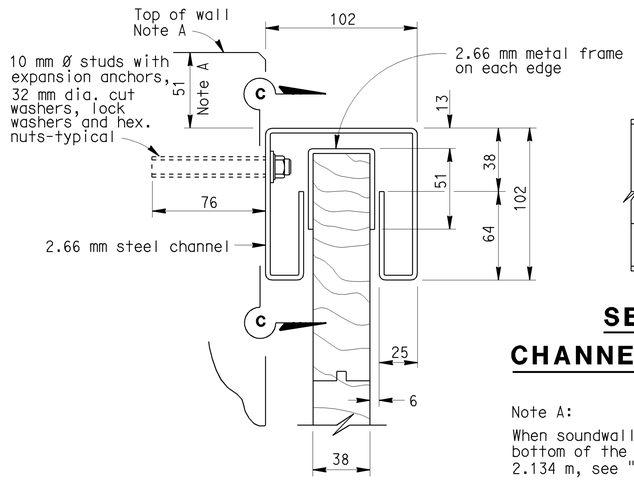

DETAIL "A"

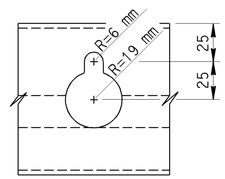

SECTION C-C
CHANNEL MOUNTING HOLE

Note A:

When soundwall as measured from the bottom of the gate opening exceeds 2.032 m or 2.134 m, see "1.524 m GATE-DETAILS NO. 2" sheet.

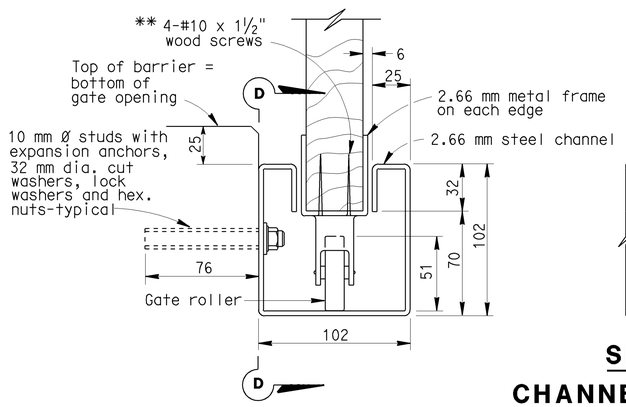

DETAIL "B"

** Wood screws are in U.S. Customary Units.

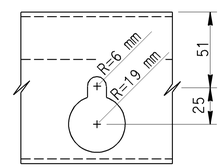

SECTION D-D
CHANNEL MOUNTING HOLE

Note :

Those blocks upon which the supporting steel channels are mounted shall be smooth faced on the mounting side

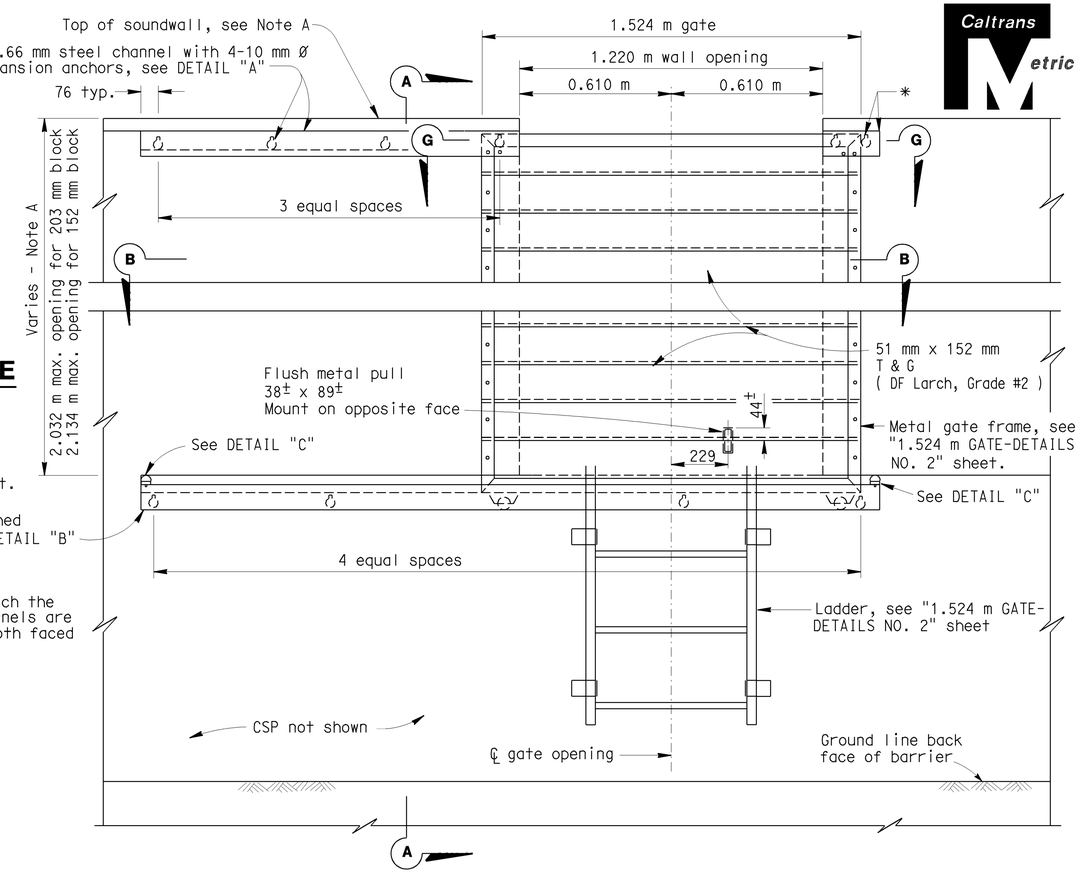

GATE ELEVATION - BACK

* 229 mm long channel attached with 2-10 mm Ø studs, see DETAIL "A"

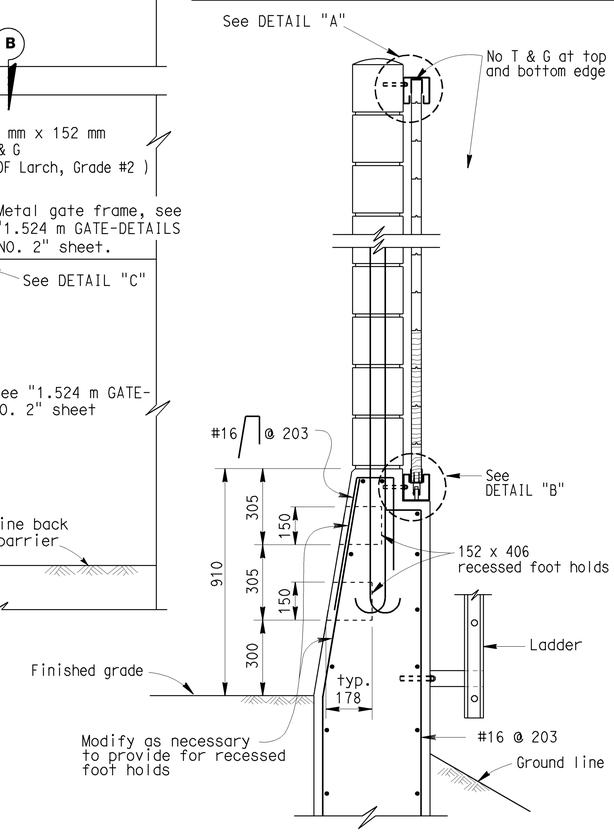

SECTION A-A

Notes:

All wood to be stained. All hardware to be galvanized.

All structural metal to be galvanized after fabrication.

Gate mounted on sloping grade shall be oriented to be in closed position when at lower grade point.

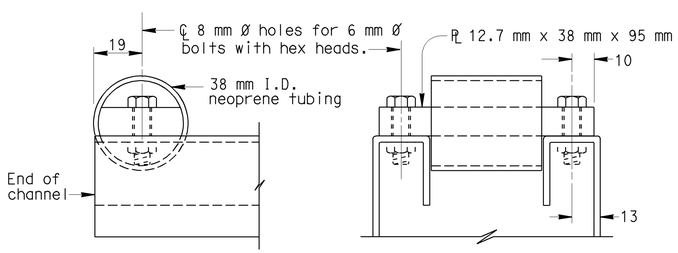

SIDE VIEW
END VIEW
DETAIL "C" STOP DETAIL

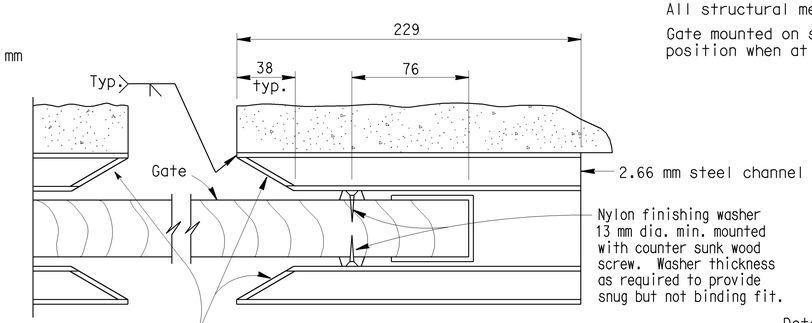

SECTION G-G

Note: For location of nylon finishing washers, see "1.524 m GATE-DETAILS NO. 2" sheet.

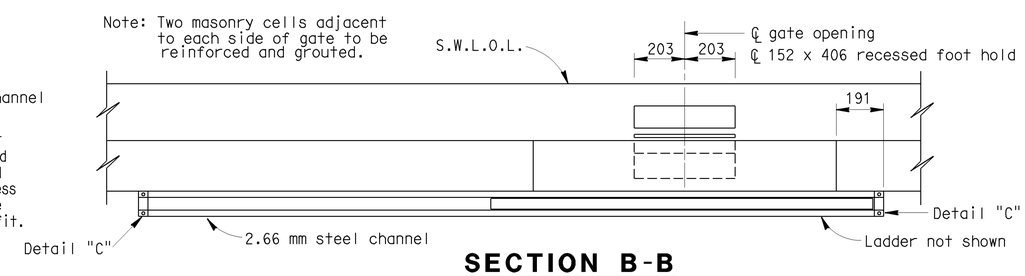

SECTION B-B

NO SCALE

ALL DIMENSIONS ARE IN MILLIMETERS UNLESS OTHERWISE SHOWN

STANDARD DRAWING				
RELEASE DATE 7/3/03	DESIGN BY J. HAMAGUCHI	CHECKED D. DUNRUD	RELEASED BY Roberto Trevelle OFFICE CHIEF	
FILE NO. xs15-230-1	DETAILS BY R. YEE	CHECKED D. DUNRUD		
	SUBMITTED BY D. DUNRUD	DRAWING DATE 11/82		

STATE OF CALIFORNIA DEPARTMENT OF TRANSPORTATION

DIVISION OF ENGINEERING SERVICES

BRIDGE NO.

KILOMETER POST

SOUNDWALL - MASONRY BLOCK ON BARRIER - 1.524 m ACCESS GATE

DETAILS NO. 1

DS OSD 2147A (METRIC) (REV. 2/25/97)

ORIGINAL SCALE IN MILLIMETERS FOR REDUCED PLANS 0 10 20 30 40 50 60 70 80 90 100

CU EA

DISREGARD PRINTS BEARING EARLIER REVISION DATES

REVISION DATES (PRELIMINARY STAGE ONLY) SHEET OF

USERNAME => jsanchez

xs15-230-1.dgn

DATE PLOTTED => 16-JAN-2004 TIME PLOTTED => 14:56