DIST.	COUNTY	ROUTE	KILOMETER POST TOTAL PROJECT	SHEET NO.	TOTAL SHEETS

REGISTERED ENGINEER - CIVIL

PLANS APPROVAL DATE

REGISTERED PROFESSIONAL ENGINEER No. Exp. CIVIL STATE OF CALIFORNIA

The State of California or its officers or agents shall not be responsible for the accuracy or completeness of electronic copies of this plan sheet.

Caltrans Metric

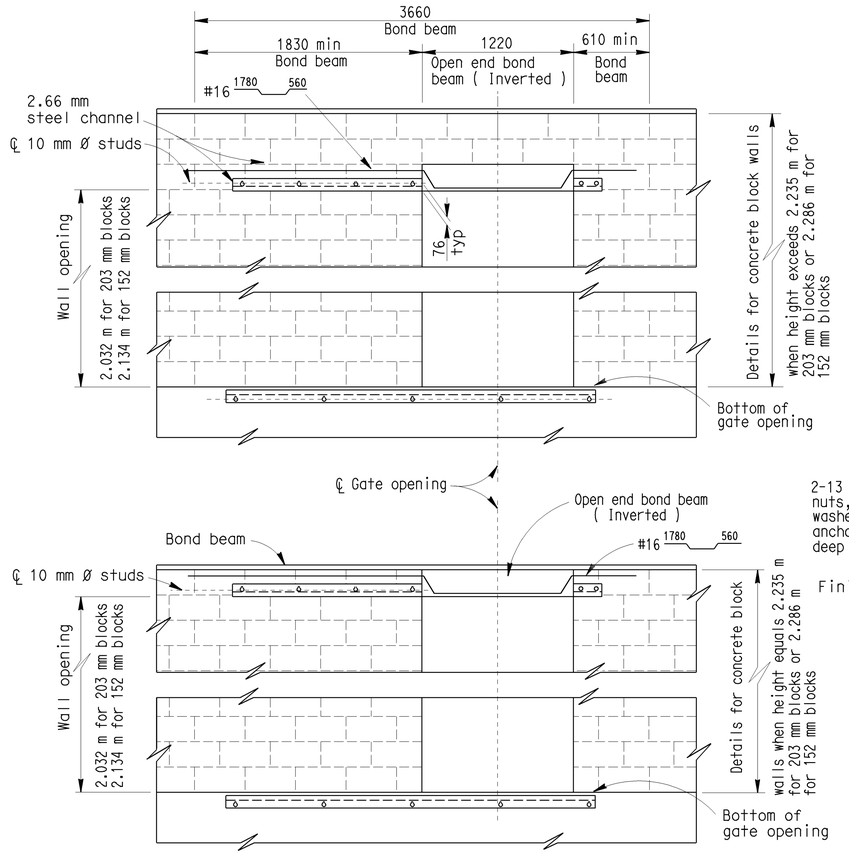

PART ELEVATION (BACK)

For details not shown, see above

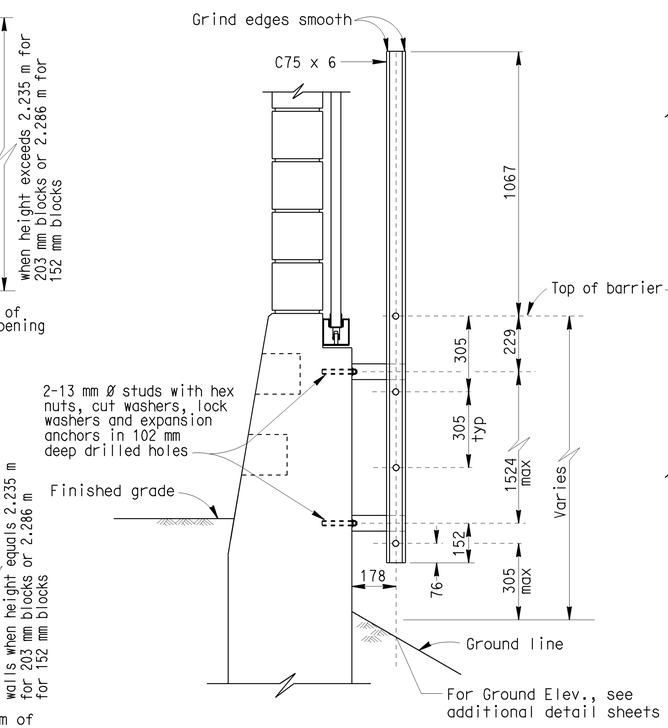

SECTION E-E

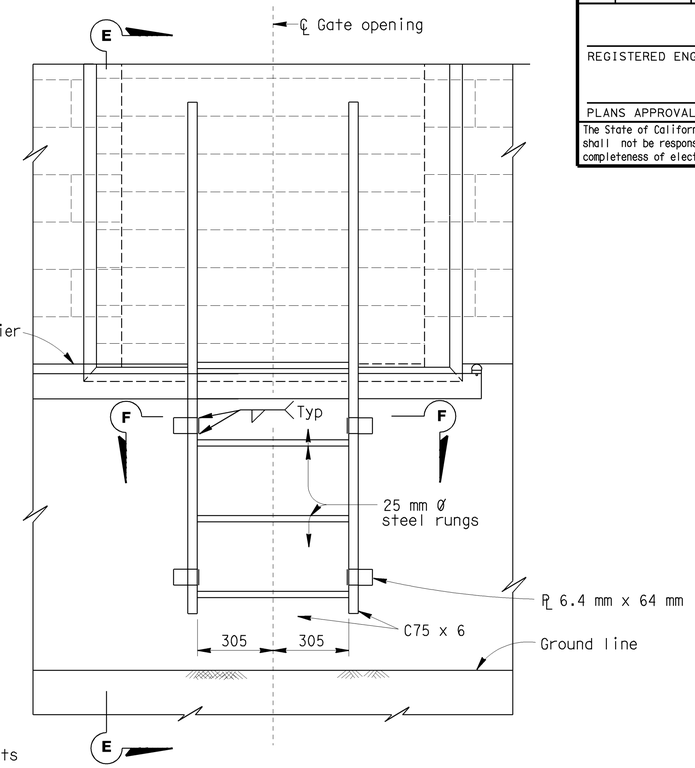

ELEVATION (BACK)

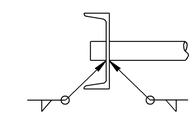

DETAIL A

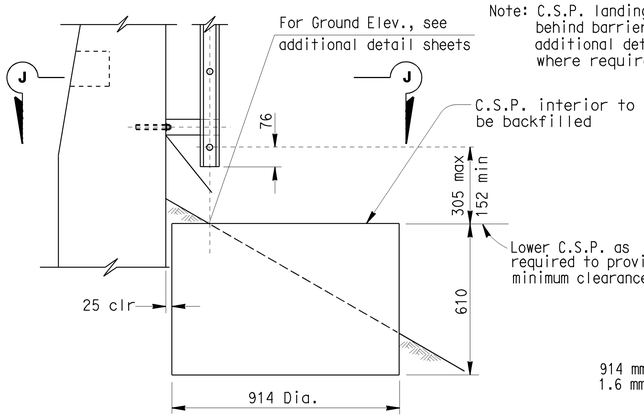

Note: C.S.P. landing required when slope of ground behind barrier is steeper than 1:8. See additional detail sheets for location where required

C. S. P. LANDING DETAILS

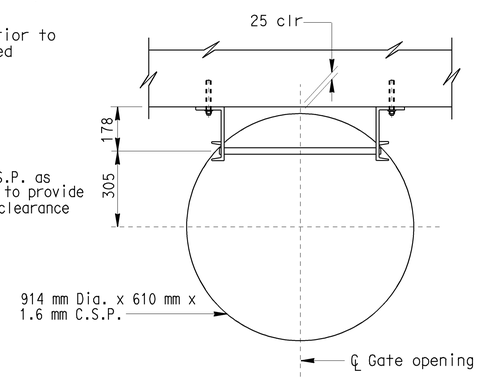

SECTION J-J

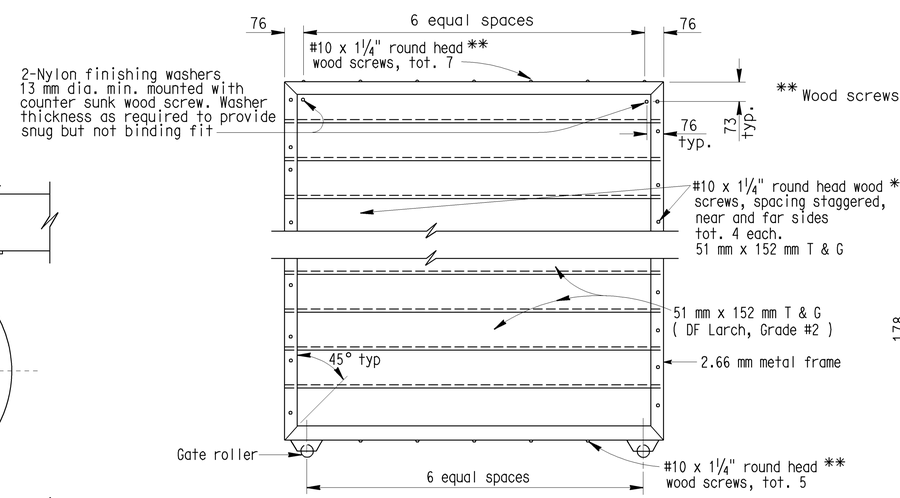

** Wood screws are in U.S. Customary Units.

ELEVATION - METAL FRAME

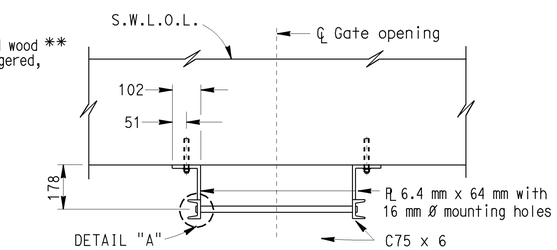

SECTION F-F

NO SCALE

ALL DIMENSIONS ARE IN MILLIMETERS UNLESS OTHERWISE SHOWN

STANDARD DRAWING					
RELEASE DATE 7/3/03	DESIGN	BY J. HAMAGUCHI	CHECKED D. DUNRUD	RELEASED BY	
	DETAILS	BY R. YEE	CHECKED D. DUNRUD		
FILE NO. xs15-230-2	SUBMITTED	BY D. DUNRUD	DRAWING DATE 11/82	OFFICE CHIEF	

STATE OF CALIFORNIA DEPARTMENT OF TRANSPORTATION

DIVISION OF ENGINEERING SERVICES

BRIDGE NO.

KILOMETER POST

SOUNDWALL - MASONRY BLOCK ON BARRIER - 1.524 m ACCESS GATE

DETAILS NO. 2

DS OSD 2147A (METRIC) (REV. 2/25/97)

ORIGINAL SCALE IN MILLIMETERS FOR REDUCED PLANS 0 10 20 30 40 50 60 70 80 90 100

CU EA

DISREGARD PRINTS BEARING EARLIER REVISION DATES

REVISION DATES (PRELIMINARY STAGE ONLY) SHEET OF

USERNAME => jsanchez

xs15-230-2.dgn

DATE PLOTTED => 16-JAN-2004 TIME PLOTTED => 14:57