DIST.	COUNTY	ROUTE	KILOMETER POST TOTAL PROJECT	SHEET NO.	TOTAL SHEETS

Caltrans Metric

REGISTERED ENGINEER - CIVIL

PLANS APPROVAL DATE

REGISTERED PROFESSIONAL ENGINEER No. Exp. CIVIL STATE OF CALIFORNIA

The State of California or its officers or agents shall not be responsible for the accuracy or completeness of electronic copies of this plan sheet.

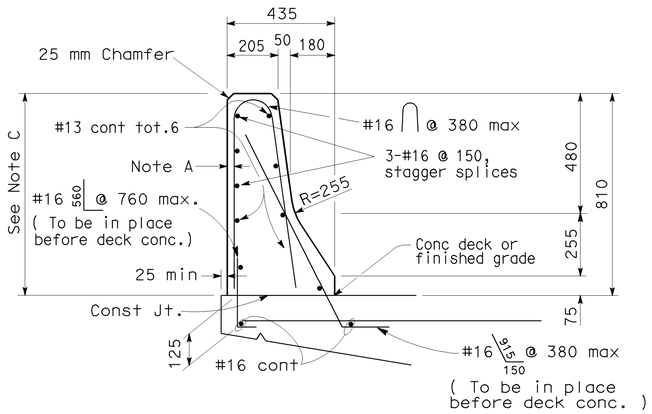

TYPE 27

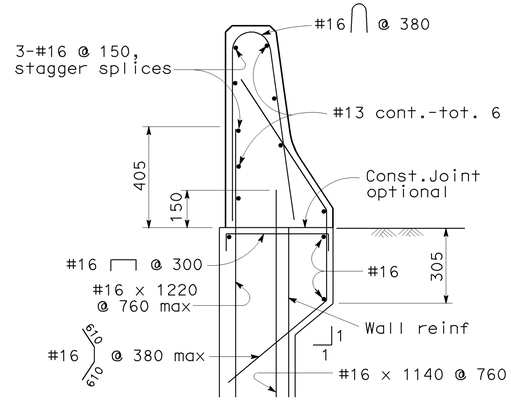

TYPE 27A

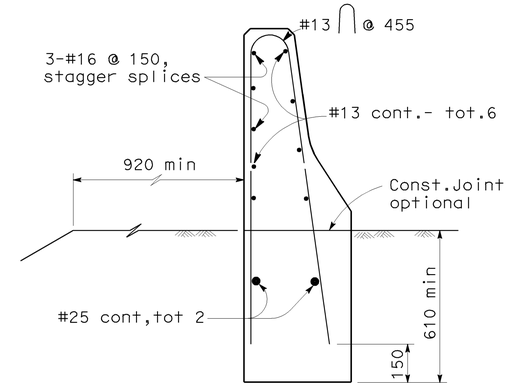

TYPE 27B

NOTES:

A. Clearance to reinforcing steel in rail to be 25 mm. Longitudinal reinforcement to stop at expansion joints, and be continuous at construction joints. Hairpin stirrups to be rotated to meet clearance.

B. Rail joints shall be located at deck and principal wall joints.

C. Dimension may vary with cross-slope and with certain thickness of surfacing. See Bridge Plans.

D. When glare screen is required, see "Concrete Barrier Type 50".

E. For Metal Beam Guardrail details not shown see Standard Plans.

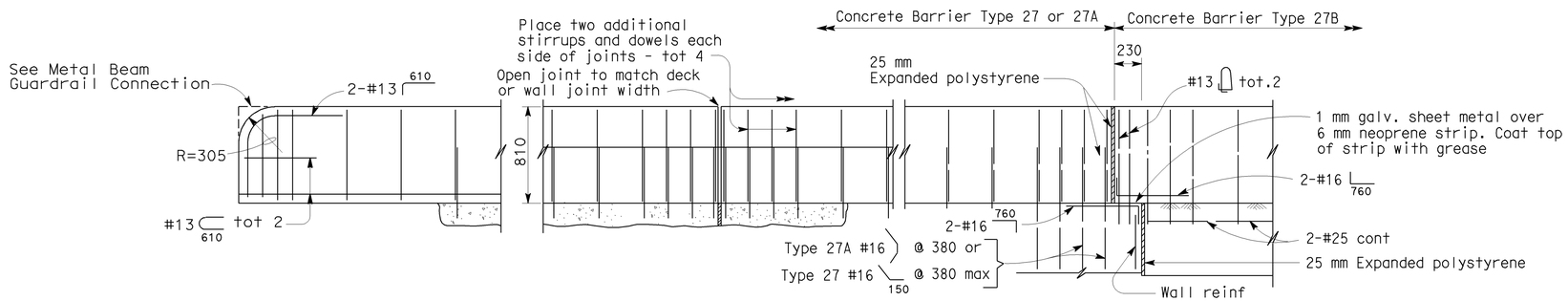

END DETAIL **DECK OR WALL JOINT** **AT CONNECTION TO STRUCTURE**

See Note B

ELEVATION

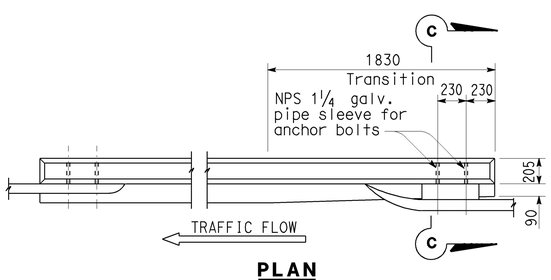

PLAN

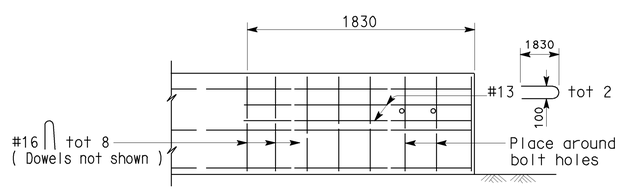

ELEVATION

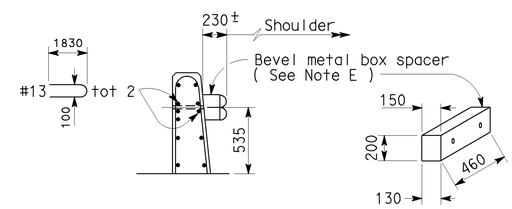

SECTION C-C

METAL BEAM GUARDRAIL CONNECTION

NO SCALE

ALL DIMENSIONS ARE IN MILLIMETERS UNLESS OTHERWISE SHOWN

STANDARD DRAWING					
RELEASE DATE 4/4/97	DESIGN	BY R.W. BISHOP	CHECKED P. HALE	RELEASED BY	
FILE NO. xs16-010	DETAILS	BY R. YEE	CHECKED P. HALE		
	SUBMITTED	BY J. HAMAGUCHI	DRAWING DATE 12/87	OFFICE CHIEF	

STATE OF CALIFORNIA DEPARTMENT OF TRANSPORTATION

DIVISION OF ENGINEERING SERVICES

BRIDGE NO.

KILOMETER POST

BARRIER - CONCRETE TYPE 27

DS OSD 2147A (METRIC) (REV. 2/25/97)

ORIGINAL SCALE IN MILLIMETERS FOR REDUCED PLANS 0 10 20 30 40 50 60 70 80 90 100

CU EA

DISREGARD PRINTS BEARING EARLIER REVISION DATES

REVISION DATES (PRELIMINARY STAGE ONLY) SHEET OF

USERNAME => jsanchez

xs16-010.dgn

DATE PLOTTED => 16-JAN-2004 TIME PLOTTED => 15:06