DIST.	COUNTY	ROUTE	KILOMETER POST TOTAL PROJECT	SHEET NO.	TOTAL SHEETS

REGISTERED ENGINEER - CIVIL

PLANS APPROVAL DATE

REGISTERED PROFESSIONAL ENGINEER No. Exp. CIVIL STATE OF CALIFORNIA

The State of California or its officers or agents shall not be responsible for the accuracy or completeness of electronic copies of this plan sheet.

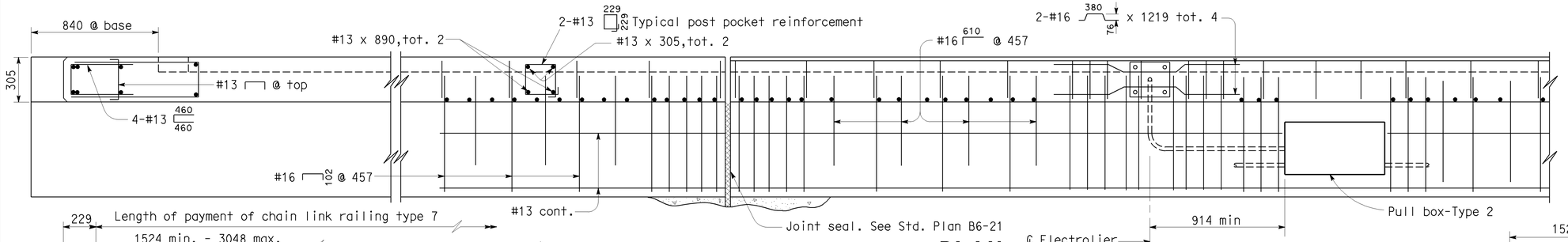

PLAN

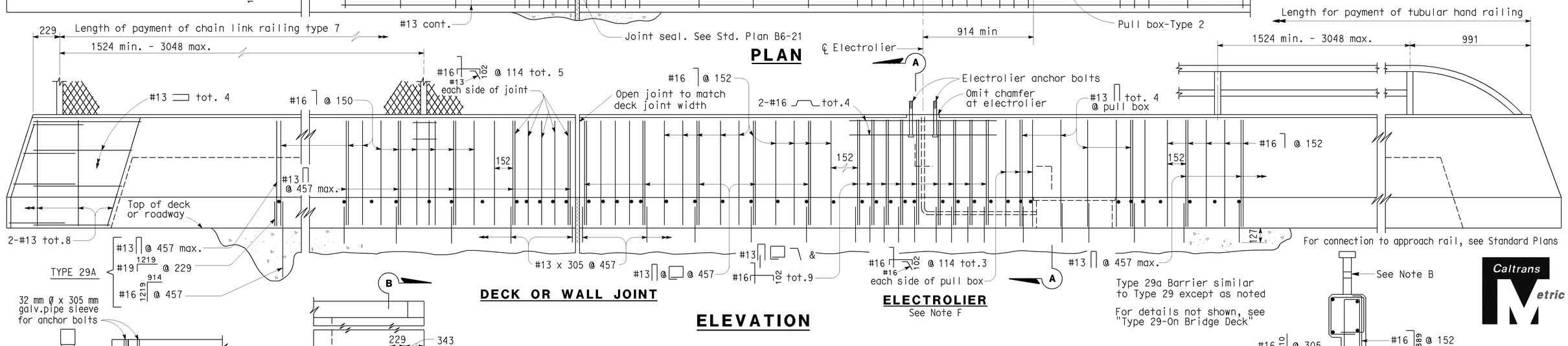

DECK OR WALL JOINT

ELECTROLIER
See Note F

ELEVATION

Type 29a Barrier similar to Type 29 except as noted

For details not shown, see "Type 29-On Bridge Deck"

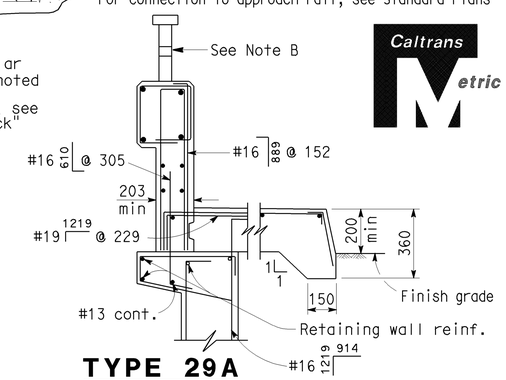

TYPE 29A

ELEVATION
DEPARTING ANCHORAGE

ELEVATION
APPROACH ANCHORAGE

METAL BEAM GUARDRAIL ANCHORAGE

Note: For metal beam guardrail connection details, see Std. Plan A77K. Railing not shown. Reinforcement shown is in addition to typical barrier railing reinf.

SECTION B-B

TYPE 29
On bridge deck

Applies to chain link railing type 7 and tubular handrailing, see respective sheets for additional details

TYPE H

CURB DETAIL

(To be used unless otherwise shown on plans)

POST POCKET DETAIL

UTILITY DUCT EXPANSION JOINT

SECTION A-A

NOTES:

A. For chain link railing notes and details not shown, see "Chain Link Railing Type 7" sheet.

B. For handrailing notes and details not shown, see "Tubular Handrailing" sheet.

C. Dimensions will vary with cross slope and with certain thickness of surfacing. See bridge plans.

D. Walls are to backfilled before railing is placed.

E. Clearance to reinforcing steel in curb and railing to be 25 mm except as noted. Longitudinal reinforcement to stop at all expansion joints.

F. See Project Plans for electrolier locations and pull box type.

G. See Bridge Plans for limits of chain link railing type 7 and / or tubular handrailing.

H. For electrical details, see Standard Plan sheets ES-7A,7B,7C,7D.

I. A minimum of 2-127 mm round openings are required for future or existing utilities. Openings are to be sealed at ends if not used. Duct forms are to be tied down.

NO SCALE

ALL DIMENSIONS ARE IN MILLIMETERS UNLESS OTHERWISE SHOWN

Caltrans Metric

STANDARD DRAWING

RELEASE DATE 6/9/98	DESIGN BY R.W. BISHOP	CHECKED J. HAMAGUCHI	RELEASED BY
FILE NO. xs16-030	DETAILS BY R. YEE	CHECKED J. HAMAGUCHI	OFFICE CHIEF
	SUBMITTED BY J. HAMAGUCHI	DRAWING DATE 2/90	

STATE OF CALIFORNIA
DEPARTMENT OF TRANSPORTATION

DIVISION OF ENGINEERING SERVICES

BRIDGE NO.

KILOMETER POST

BARRIER - CONCRETE TYPE 29 NO. 1

DS OSD 2147A (METRIC) (REV. 2/25/97)

ORIGINAL SCALE IN MILLIMETERS FOR REDUCED PLANS 0 10 20 30 40 50 60 70 80 90 100

CU
EA

DISREGARD PRINTS BEARING EARLIER REVISION DATES

REVISION DATES (PRELIMINARY STAGE ONLY) SHEET OF

USERNAME => jsanchez

xs16-030.dgn

DATE PLOTTED => 16-JAN-2004 TIME PLOTTED => 15:06