DIST.	COUNTY	ROUTE	KILOMETER POST TOTAL PROJECT	SHEET NO.	TOTAL SHEETS

Caltrans Metric

REGISTERED ENGINEER - CIVIL

PLANS APPROVAL DATE

REGISTERED PROFESSIONAL ENGINEER No. Exp. CIVIL STATE OF CALIFORNIA

The State of California or its officers or agents shall not be responsible for the accuracy or completeness of electronic copies of this plan sheet.

RSPA78F

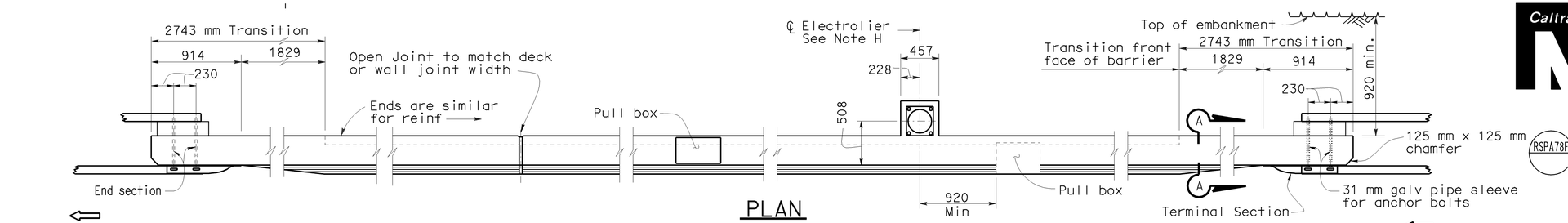

PLAN

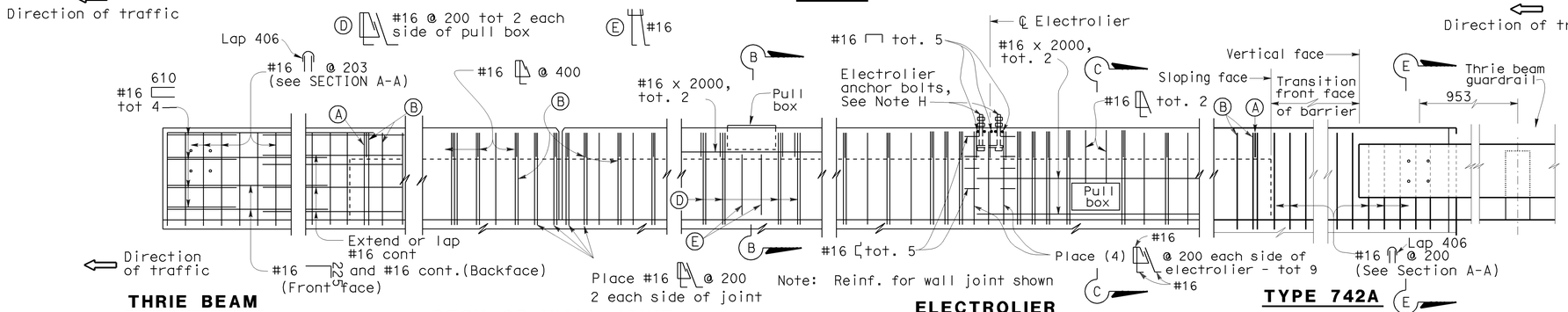

THRIE BEAM GUARDRAIL CONNECTION

DECK OR WALL JOINT

ELEVATION

ELECTROLIER (See Note F)

TYPE 742A

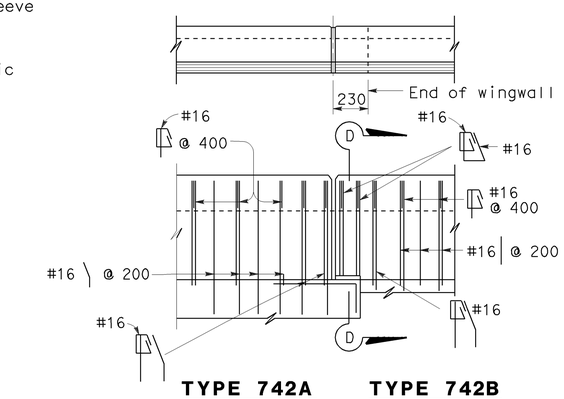

TYPE 742A TYPE 742B

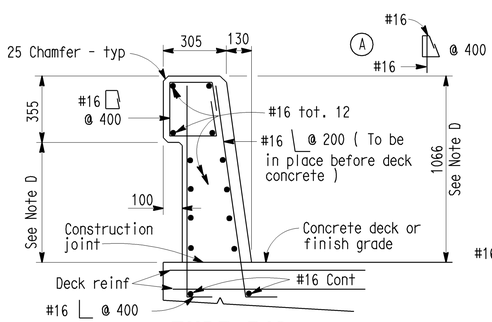

TYPE 742

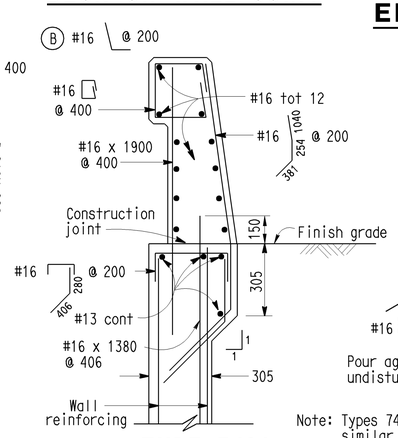

TYPE 742A

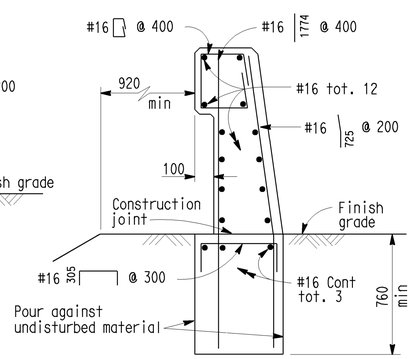

Note: Types 742A & 742B are similar to Type 742 except as noted

TYPE 742B

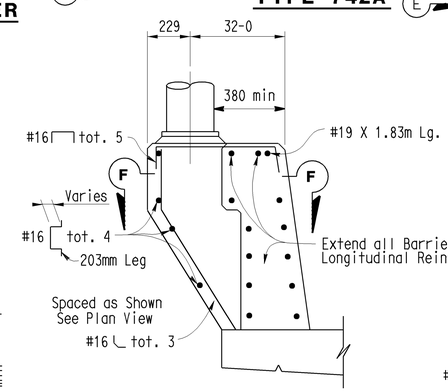

PEDESTAL ELEVATION

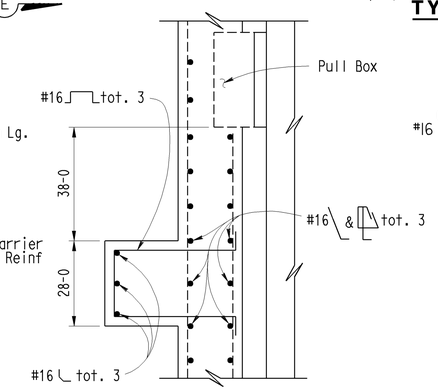

SECTION F-F

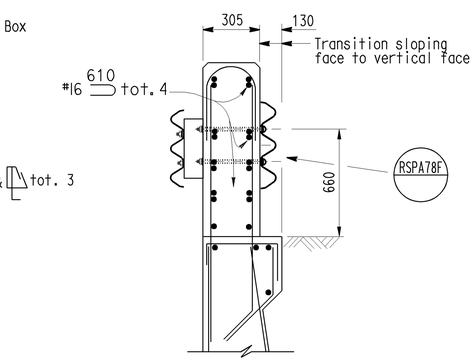

SECTION E-E

See Note E

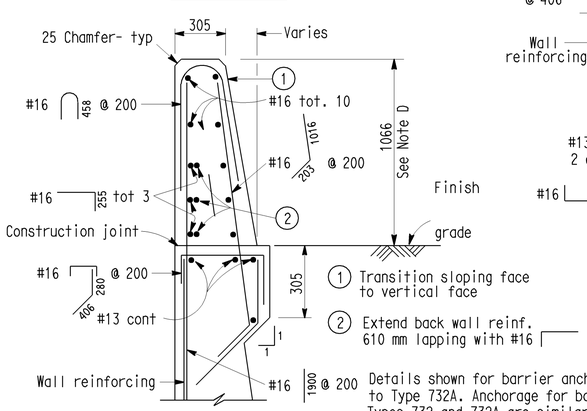

Details shown for barrier anchorage to Type 732A. Anchorage for barrier Types 732 and 732A are similar to their respective details.

SECTION A-A

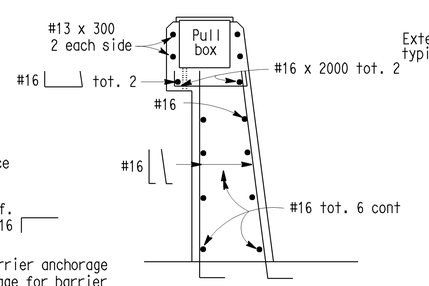

SECTION B-B

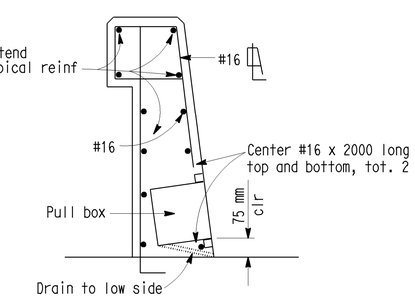

SECTION C-C

See Notes

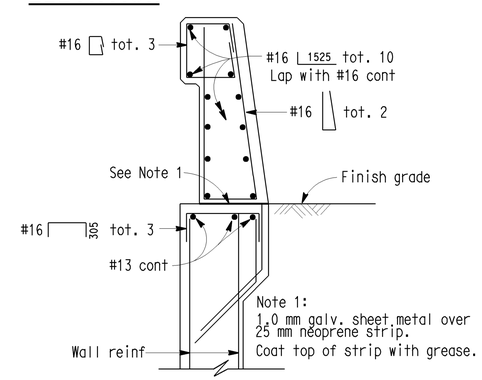

SECTION D-D

NOTES:

A. Walls are to be backfilled before barrier is placed.

B. Clearance to reinforcing steel in barrier to be 25 mm, except as noted. Longitudinal reinforcement to stop at all expansion joints.

C. See project plans for locations of electroliers and pull boxes.

D. Dimensions may vary with roadway cross slope and with certain thickness of surfacing. See Project Plans.

E. For Thrie Beam Connection details not shown, see General Plan and Standard Plans.

F. Refer to Project Plans and Standard Plan Sheets ES-7A, ES-7B and ES-7D for electrical details concerning barriers. The maximum number of conduits in a barrier is limited to two (2) 50 mm conduits (max.) along with one (1) 75 mm conduit. When a 75 mm conduit is used, it is restricted to the base of barrier.

G. Minimum concrete edge distance to reinforcing shown, shall be maintained, edge distance may be adjusted to accomodate increase in concrete cover for architectural treatment. See Typical Section.

H. End sections must be installed on all structures.

NO SCALE

ALL DIMENSIONS ARE IN MILLMETERS UNLESS OTHERWISE SHOWN

RELEASE DATE	8/26/03	DESIGN	BY RALPH BISHOP	CHECKED	N ABDIN	RELEASED BY
FILE NO.	xs16-040	DETAILS	BY A R DUDSAK	CHECKED	N ABDIN	OFFICE CHIEF
		SUBMITTED	BY N ABDIN	DRAWING DATE	6/03	

STATE OF CALIFORNIA DEPARTMENT OF TRANSPORTATION

DIVISION OF ENGINEERING SERVICES

BRIDGE NO.

KILOMETER POST

BARRIER - CONCRETE TYPE 742

DS OSD 2147A (METRIC)

ORIGINAL SCALE IN MILLIMETERS FOR REDUCED PLANS 0 10 20 30 40 50 60 70 80 90 100

CU EA

DISREGARD PRINTS BEARING EARLIER REVISION DATES

REVISION DATES (PRELIMINARY STAGE ONLY) SHEET OF

USERNAME => jsanchez

xs16-040.dgn

DATE PLOTTED => 16-JAN-2004 TIME PLOTTED => 15:07