DIST.	COUNTY	ROUTE	KILOMETER POST TOTAL PROJECT	SHEET NO.	TOTAL SHEETS

Caltrans Metric

REGISTERED ENGINEER - CIVIL

PLANS APPROVAL DATE

REGISTERED PROFESSIONAL ENGINEER No. Exp. CIVIL STATE OF CALIFORNIA

The State of California or its officers or agents shall not be responsible for the accuracy or completeness of electronic copies of this plan sheet.

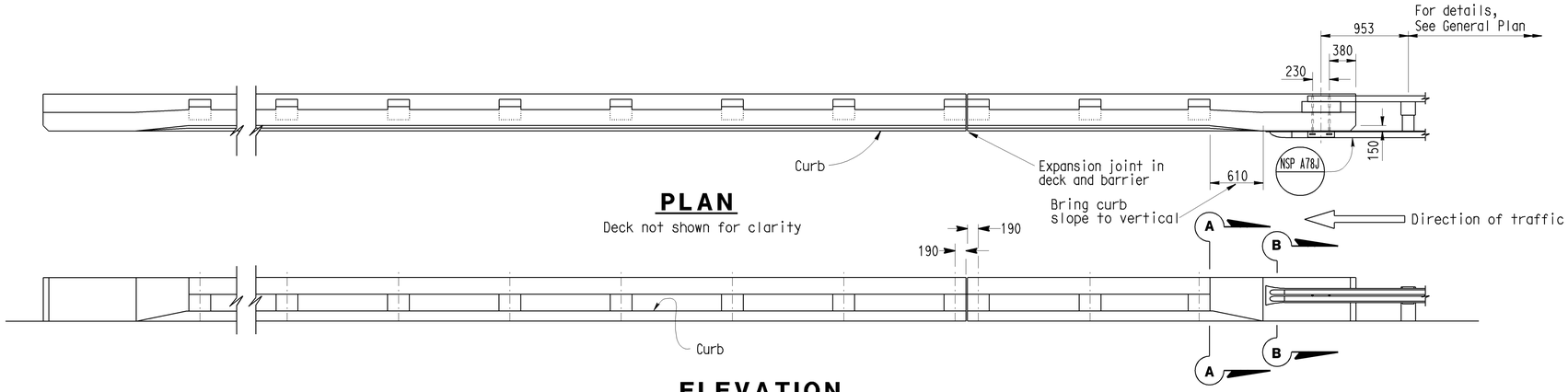

PLAN

Deck not shown for clarity

ELEVATION

NOTES:

A. Walls are to be backfilled before the barrier is placed.

B. Clearance to reinforcing steel in barrier to be 25 mm, except as noted. Longitudinal reinforcing steel to stop at all expansion joints.

C. The front face dimensions are to be constant above the finish roadway profile, but the overall height will vary with certain thicknesses of surfacing and roadway slopes.

D. Expansion joint to match deck joint.

E. Splicing of longitudinal reinforcing shall be by butt welding, mechanical butt splicing, or mechanical lap splicing only. No lap splicing allowed on the longitudinal rail reinforcing. Splicing shall be staggered.

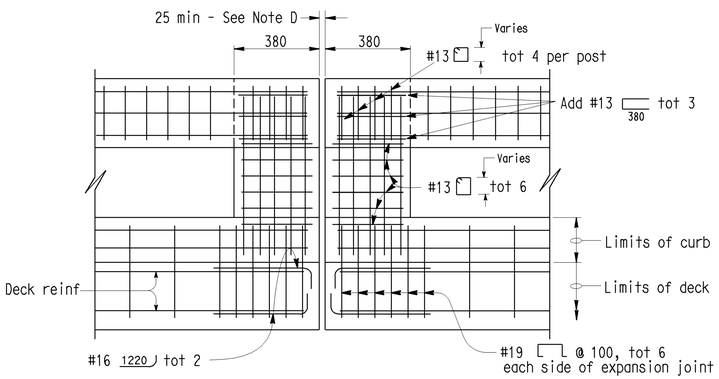

EXPANSION JOINT DETAIL

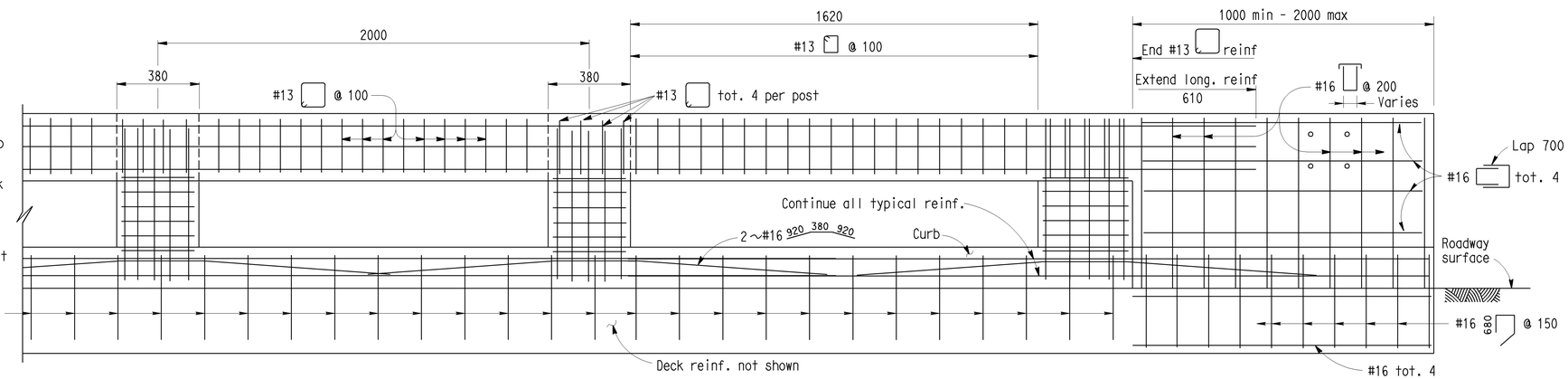

LONGITUDINAL SECTION

Note: Deck or wingwall reinf. not shown.

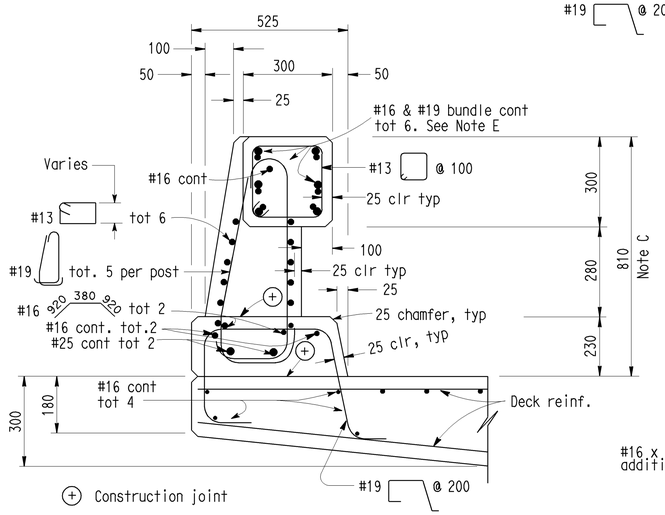

TYPICAL SECTION

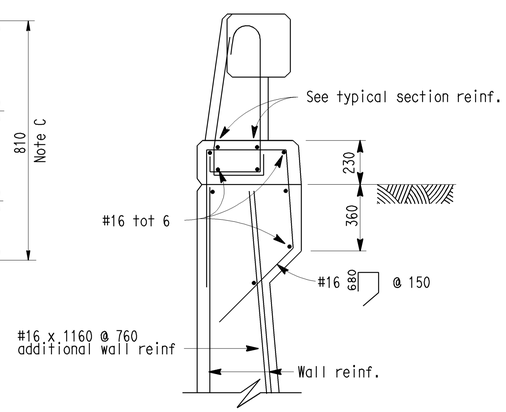

TYPE 80A

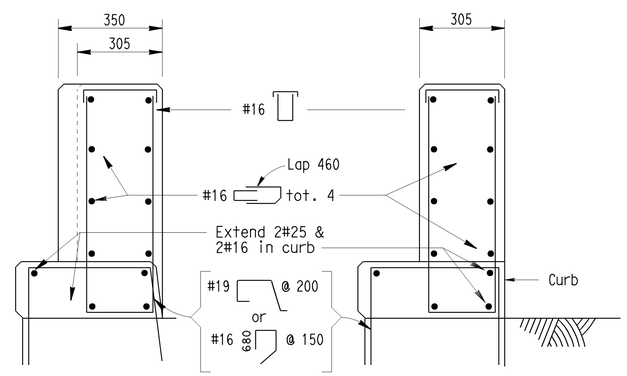

SECTION A-A

SECTION B-B

NO SCALE

ALL DIMENSIONS ARE IN MILLMETERS UNLESS OTHERWISE SHOWN

STANDARD DRAWING				
RELEASE DATE 6/18/03	DESIGN	BY R BISHOP	CHECKED N ABDIN	RELEASED BY
	DETAILS	BY A R DUDSAK	CHECKED N ABDIN	
FILE NO. xs16-050-1	SUBMITTED	BY N ABDIN	DRAWING DATE 9/00	OFFICE CHIEF

STATE OF CALIFORNIA DEPARTMENT OF TRANSPORTATION

DIVISION OF ENGINEERING SERVICES

BRIDGE NO.

KILOMETER POST

BARRIER - CONCRETE TYPE 80 - SHEET 1 OF 2

DS OSD 2147A (METRIC) (REV. X/XX/XX)

ORIGINAL SCALE IN MILLIMETERS FOR REDUCED PLANS 0 10 20 30 40 50 60 70 80 90 100

CU
EA

DISREGARD PRINTS BEARING EARLIER REVISION DATES

REVISION DATES (PRELIMINARY STAGE ONLY) SHEET OF

USERNAME => jsanchez

xs16-050-1.dgn

DATE PLOTTED => 16-JAN-2004 TIME PLOTTED => 15:07