DIST.	COUNTY	ROUTE	KILOMETER POST TOTAL PROJECT	SHEET NO.	TOTAL SHEETS

Caltrans Metric

REGISTERED ENGINEER - CIVIL

PLANS APPROVAL DATE

REGISTERED PROFESSIONAL ENGINEER No. Exp. CIVIL STATE OF CALIFORNIA

The State of California or its officers or agents shall not be responsible for the accuracy or completeness of electronic copies of this plan sheet.

① 16 mm Ø Sleeve nut anchorage (See Detail E) or Resin capsule anchorage (See Alternative Anchorage). A total of 8 anchorage units required per plate. All metal plates to be galvanized after fabrication. Hardware to be galvanized or non-corrosive

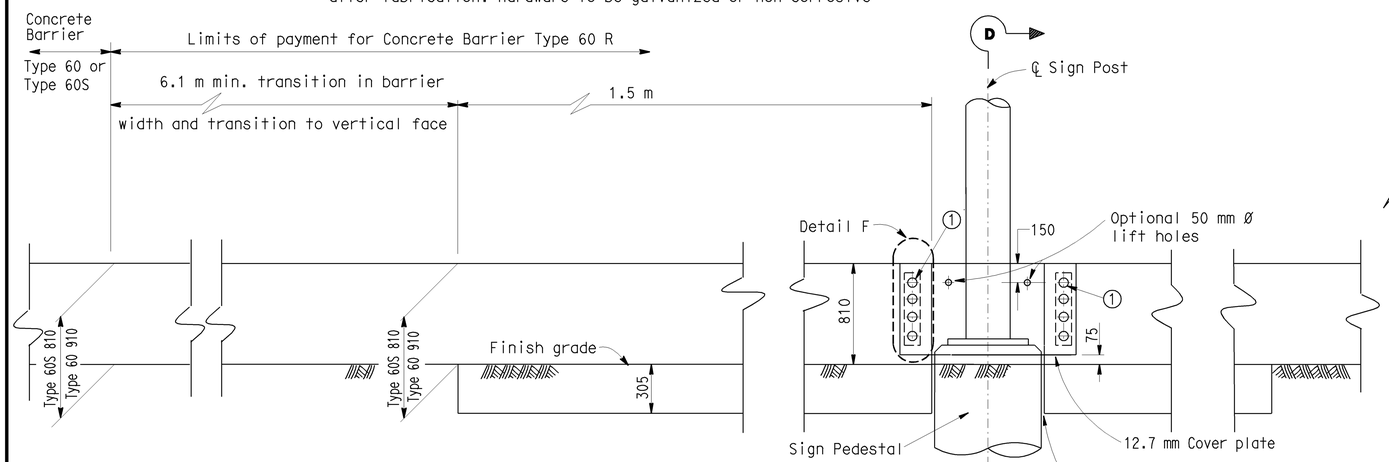

ELEVATION

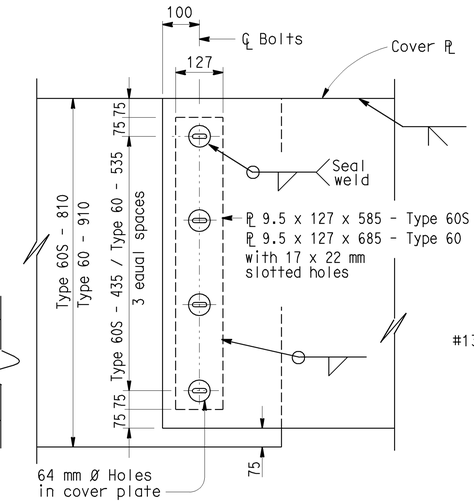

DETAIL F

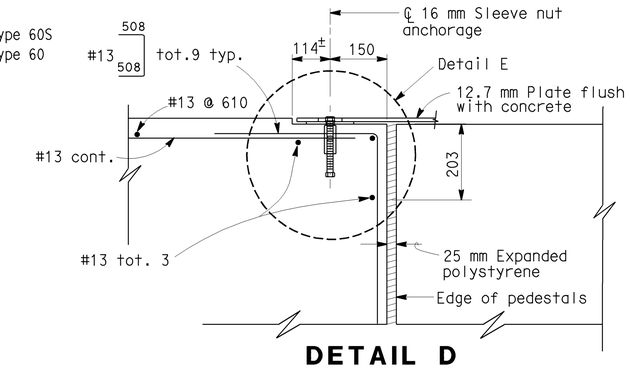

DETAIL D

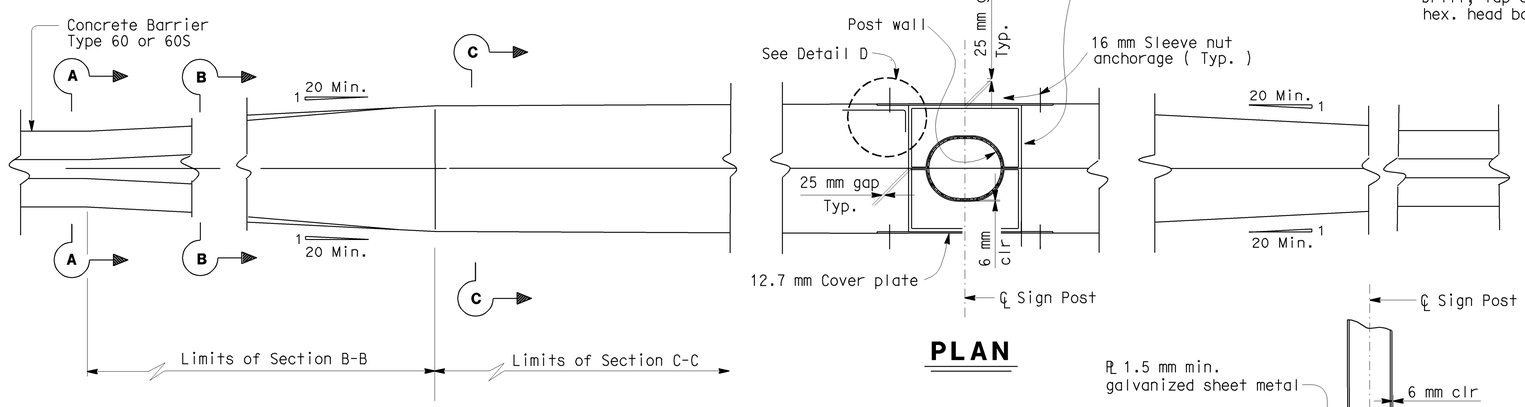

PLAN

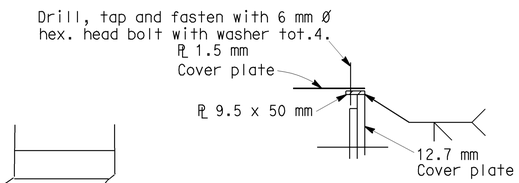

DETAIL G

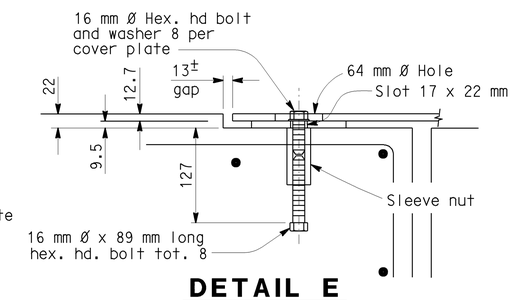

DETAIL E

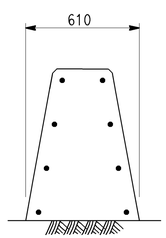

SECTION A-A

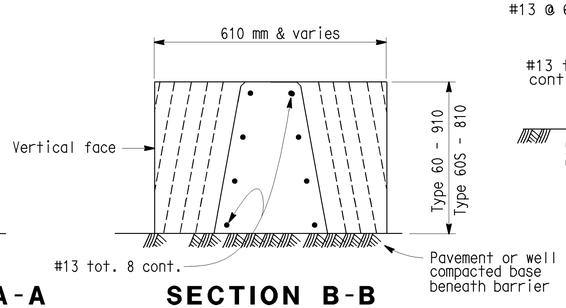

SECTION B-B

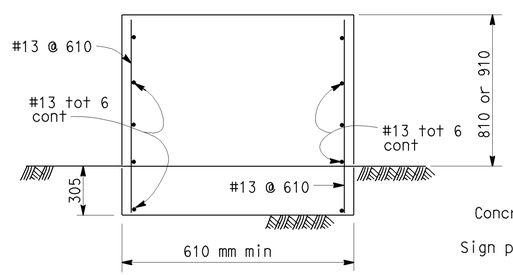

SECTION C-C

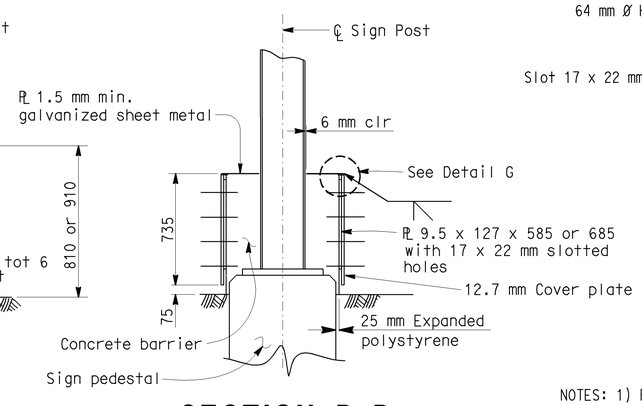

SECTION D-D

Note: Concrete Barrier Type 60 R is symmetrical about ℄ of sign post.

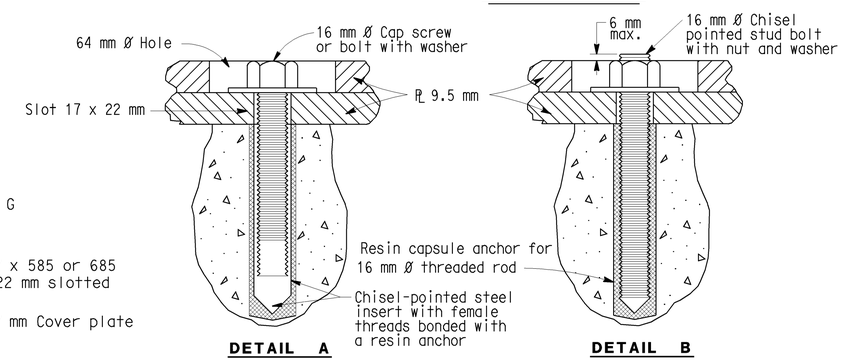

ALTERNATIVE ANCHORAGE

NOTES: 1) Resin capsule anchorage is subject to approval of the Engineer. Installation procedures shall comply with manufacturer's instructions.

2) Detail B similar to Detail A except for anchorage devices.

NO SCALE

ALL DIMENSIONS ARE IN MILLIMETERS UNLESS OTHERWISE SHOWN

STANDARD DRAWING					
RELEASE DATE 8/26/03	DESIGN	BY R. Bishop	CHECKED N ABDIN	RELEASED BY	
	DETAILS	BY Ben Matsuo	CHECKED N ABDIN		
FILE NO. xs16-080	SUBMITTED	BY R.C. Anderson	DRAWING DATE 6/99	OFFICE CHIEF	

STATE OF CALIFORNIA DEPARTMENT OF TRANSPORTATION

DIVISION OF ENGINEERING SERVICES

BRIDGE NO.

KILOMETER POST

BARRIER-CONCRETE TYPE 60 R TRANSITION AT SIGN POST

DS OSD 2147A (METRIC) (REV. 2/25/97)

ORIGINAL SCALE IN MILLIMETERS FOR REDUCED PLANS 0 10 20 30 40 50 60 70 80 90 100

CU EA

DISREGARD PRINTS BEARING EARLIER REVISION DATES

REVISION DATES (PRELIMINARY STAGE ONLY) SHEET OF

USERNAME => jsanchez

xs16-080.dgn

DATE PLOTTED => 16-JAN-2004 TIME PLOTTED => 15:10