DIST.	COUNTY	ROUTE	KILOMETER POST TOTAL PROJECT	SHEET NO.	TOTAL SHEETS

Caltrans Metric

REGISTERED ENGINEER - CIVIL

PLANS APPROVAL DATE

REGISTERED PROFESSIONAL ENGINEER No. Exp. CIVIL STATE OF CALIFORNIA

The State of California or its officers or agents shall not be responsible for the accuracy or completeness of electronic copies of this plan sheet.

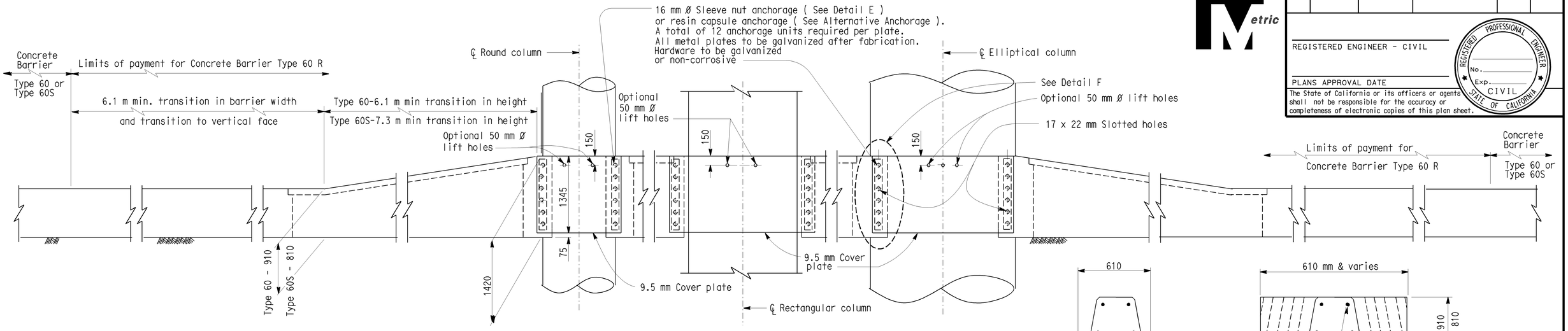

ELEVATION

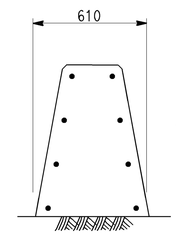

SECTION A-A

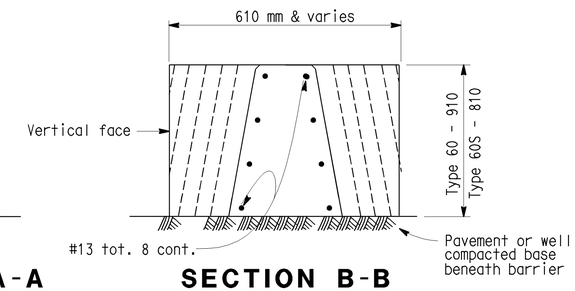

SECTION B-B

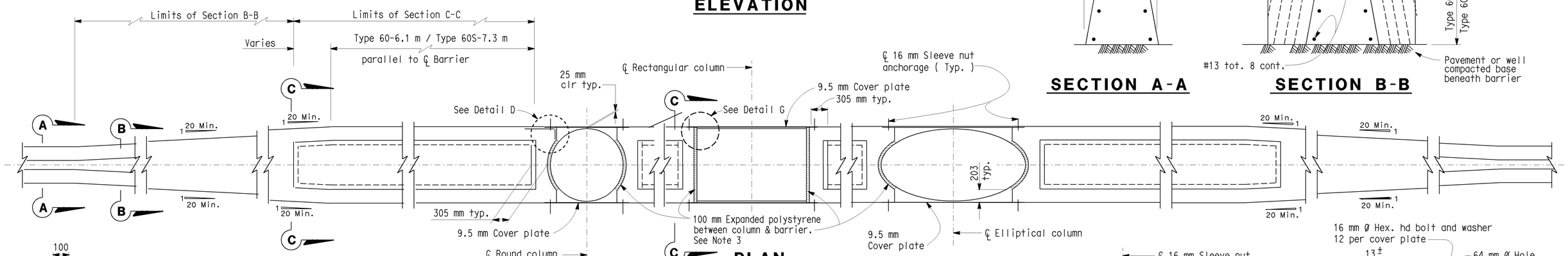

PLAN

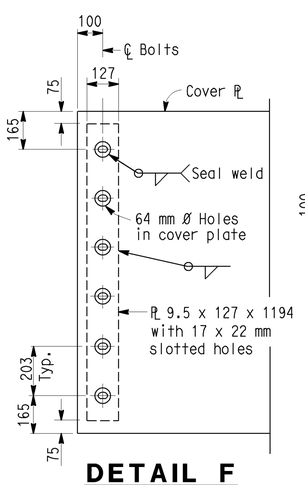

DETAIL F

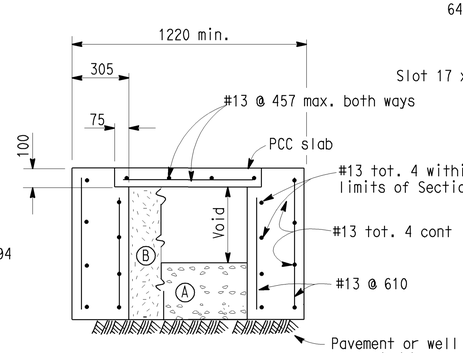

SECTION C-C

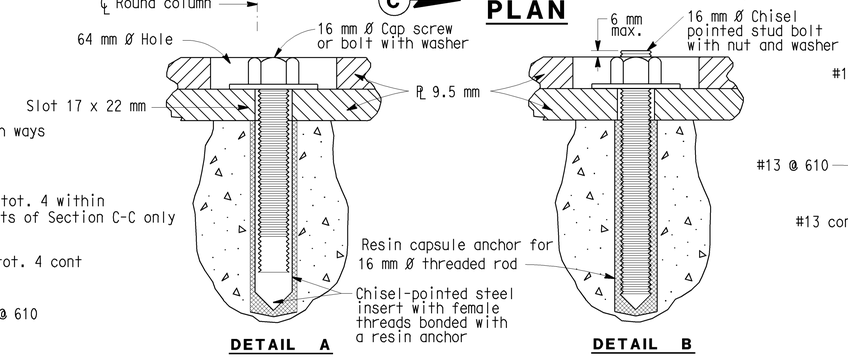

DETAIL A DETAIL B

ALTERNATIVE ANCHORAGE

NOTES: 1) Resin capsule anchorage is subject to approval of the Engineer. Installation procedures shall comply with manufacturer's instructions.

2) Detail B similar to Detail A except for anchorage devices.

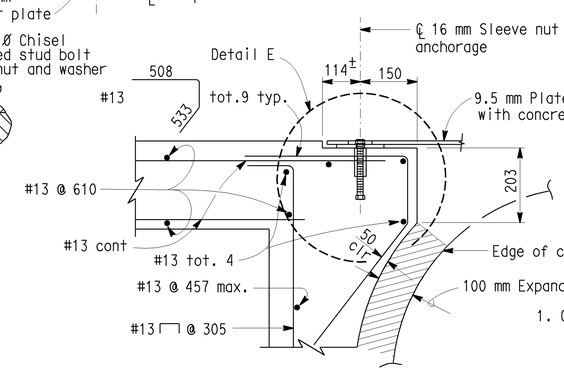

DETAIL D

NO SCALE

ALL DIMENSIONS ARE IN MILLMETERS UNLESS OTHERWISE SHOWN

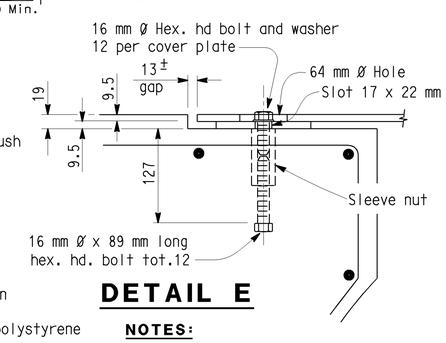

DETAIL E

NOTES:

1. Contractor options for fill between barrier walls.
   - (A) Place 610 mm PCC at base between barrier walls.
   - (B) Place granular material from base to bottom of 100 mm cap.
2. Forming material for 100 mm cap may remain in place.
3. Enclose column with 100 mm expanded polystyrene at locations where concrete or cement treated base encases the column.
4. For Detail G, see Transition at Bridge Column sheet 2 of 2.

STANDARD DRAWING					
RELEASE DATE 8/26/03	DESIGN	BY RALPH BISHOP	CHECKED N ABDIN	RELEASED BY	
FILE NO. xs16-090-1	DETAILS	BY BEN MATSUO	CHECKED N ABDIN	OFFICE CHIEF	
	SUBMITTED	BY R.C. ANDERSON	DRAWING DATE 6/99		

STATE OF CALIFORNIA DEPARTMENT OF TRANSPORTATION

DIVISION OF ENGINEERING SERVICES

BRIDGE NO.

KILOMETER POST

BARRIER - CONCRETE TYPE 60R TRANSITION AT BRIDGE COLUMN

DS OSD 2147A (METRIC) (REV. 2/25/97)

ORIGINAL SCALE IN MILLIMETERS FOR REDUCED PLANS 0 10 20 30 40 50 60 70 80 90 100

CU EA

DISREGARD PRINTS BEARING EARLIER REVISION DATES

REVISION DATES (PRELIMINARY STAGE ONLY)

SHEET 1 OF 2

USERNAME => jsanchez

xs16-090-1.dgn

DATE PLOTTED => 16-JAN-2004 TIME PLOTTED => 15:10