DIST.	COUNTY	ROUTE	KILOMETER POST TOTAL PROJECT	SHEET NO.	TOTAL SHEETS

Caltrans Metric

REGISTERED ENGINEER - CIVIL

PLANS APPROVAL DATE

REGISTERED PROFESSIONAL ENGINEER No. Exp. CIVIL STATE OF CALIFORNIA

The State of California or its officers or agents shall not be responsible for the accuracy or completeness of electronic copies of this plan sheet.

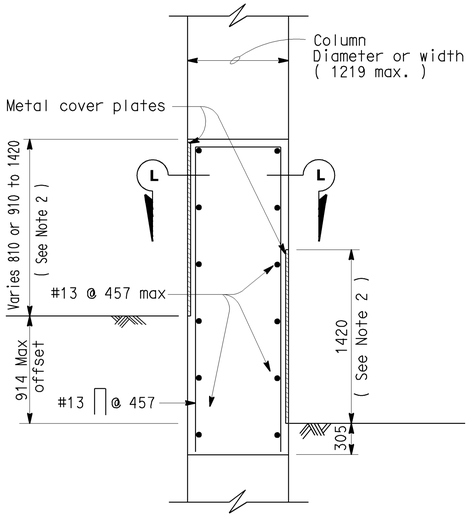

TYPICAL SECTION

Roadway offset 914 mm or less
Column width less than 1219 mm

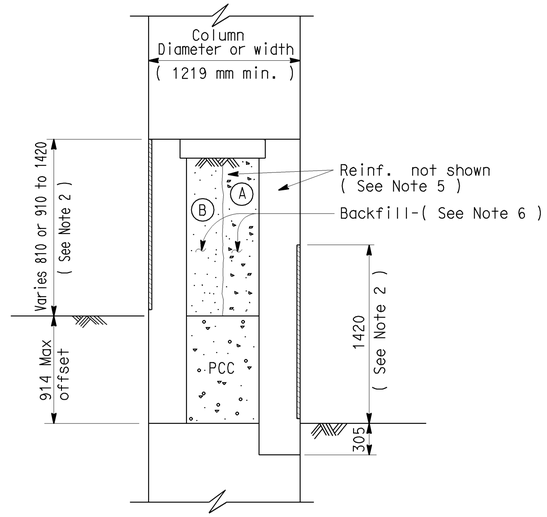

TYPICAL SECTION

Roadway offset 914 mm or less
Column widths greater than 1219 mm

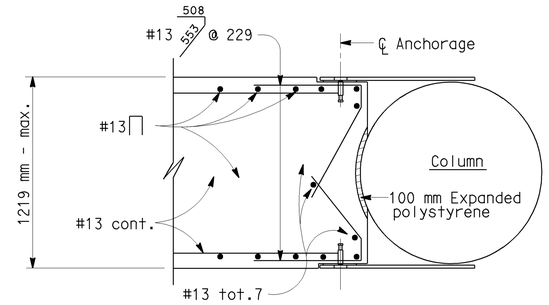

SECTION L-L

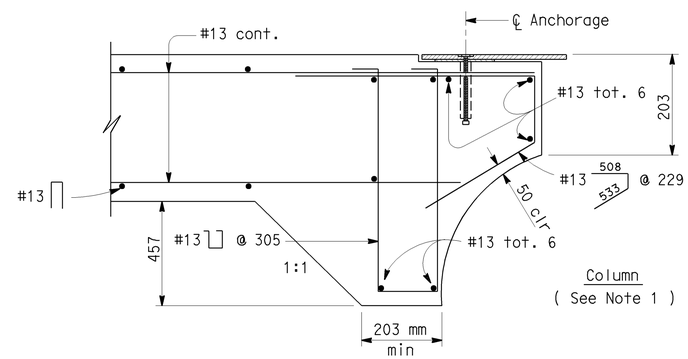

SECTION M-M

NOTES:

1. These details are to be combined with "Concrete Barrier Type 60 R" Sheet No.1. Details not indicated are similar to the details shown elsewhere on said sheet.
2. Metal plate details at columns shown on Concrete Barrier Type 60 R Sheet No.1.
3. For Retaining Wall Type 1A details, see Standard Plans.
4. Extend retaining wall footing dimension "B" to satisfy column width as indicated.
5. Extend reinforcement as shown in Section C-C on Concrete Barrier Type 60 R Sheet No.1.
6. Contractor options for fill between barrier walls:
   - (A) Place PCC between barrier walls, may be placed monolithic.
   - (B) Place granular material from base to bottom of concrete cap.

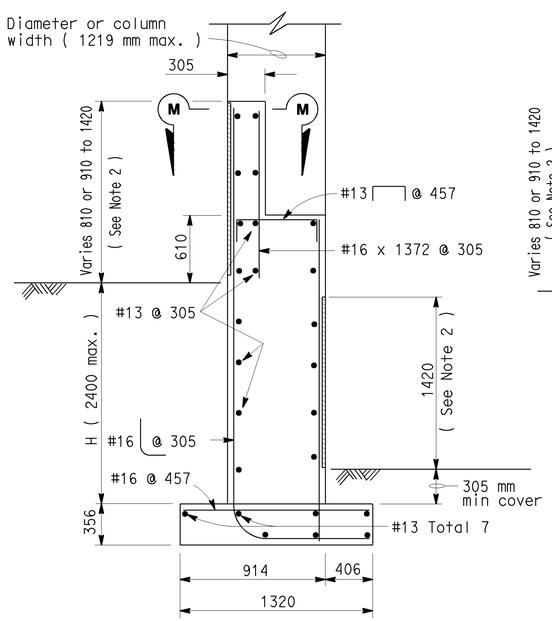

TYPICAL SECTION

Roadway offsets greater than 914 mm
Column widths 1219 mm or less

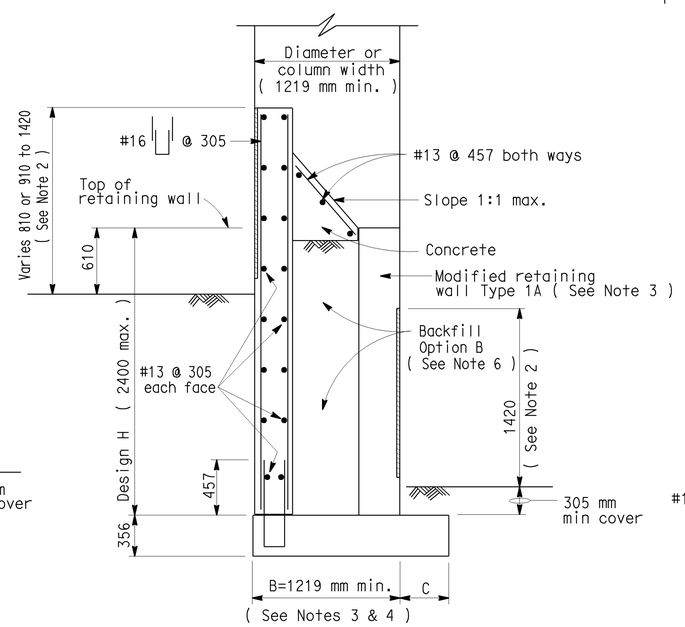

TYPICAL SECTION

Roadway offsets greater than 914 mm
Column widths greater than 1219 mm

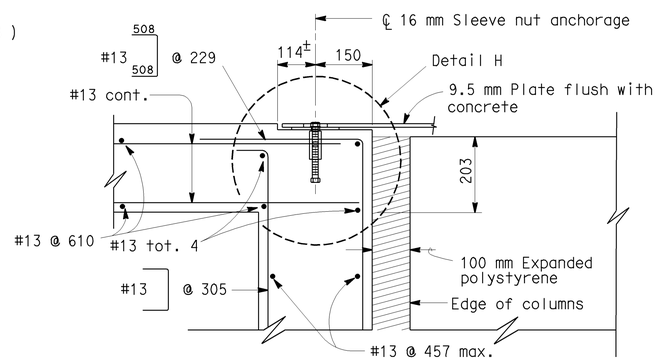

DETAIL G

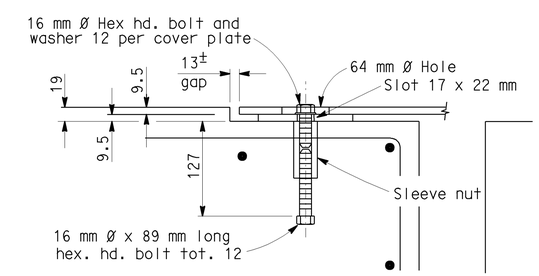

DETAIL H

NO SCALE

ALL DIMENSIONS ARE IN MILLMETERS UNLESS OTHERWISE SHOWN

STANDARD DRAWING				
RELEASE DATE 8/26/03	DESIGN	BY R. BISHOP	CHECKED D. SOON	RELEASED BY
FILE NO. xs16-090-2	DETAILS	BY BEN MATSUO	CHECKED R. BISHOP	OFFICE CHIEF
	SUBMITTED	BY R.C. ANDERSON	DRAWING DATE 6/99	

STATE OF CALIFORNIA
DEPARTMENT OF TRANSPORTATION

DIVISION OF ENGINEERING SERVICES

BRIDGE NO.

KILOMETER POST

BARRIER - CONCRETE TYPE 60R TRANSITION AT BRIDGE COLUMN

DS OSD 2147A (METRIC) (REV. 2/25/97)

ORIGINAL SCALE IN MILLIMETERS FOR REDUCED PLANS 0 10 20 30 40 50 60 70 80 90 100

CU
EA

DISREGARD PRINTS BEARING EARLIER REVISION DATES

REVISION DATES (PRELIMINARY STAGE ONLY)

SHEET 2 OF 2

USERNAME => jsanchez

xs16-090-2.dgn

DATE PLOTTED => 16-JAN-2004 TIME PLOTTED => 15:10