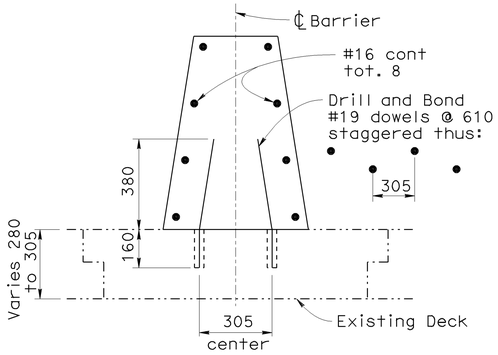

MODIFIED TYPE 60SA.1 OR 60A.1

SEE NOTE 10 FOR RESPECTIVE BARRIER DIMENSIONS

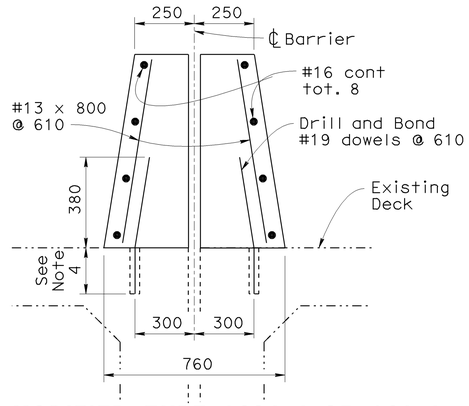

MODIFIED TYPE 60SA.4 OR 60A.4

ONLY VERTICAL DIMENSION VARIES ACCORDING TO RESPECTIVE BARRIER HEIGHT. SEE NOTE 10.

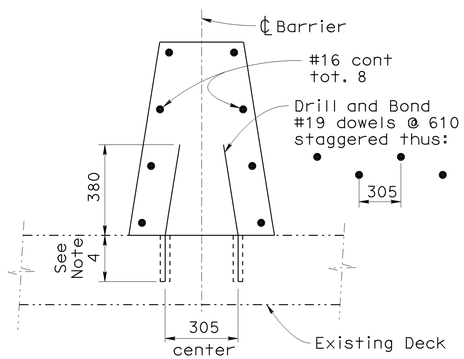

MODIFIED TYPE 60SA.2 OR 60A.2

SEE NOTE 10 FOR RESPECTIVE BARRIER DIMENSIONS

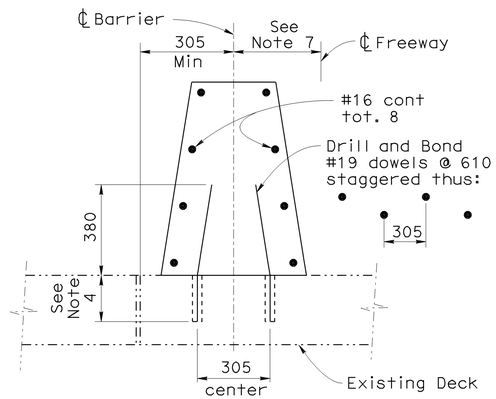

MODIFIED TYPE 60SA.5 OR 60A.5

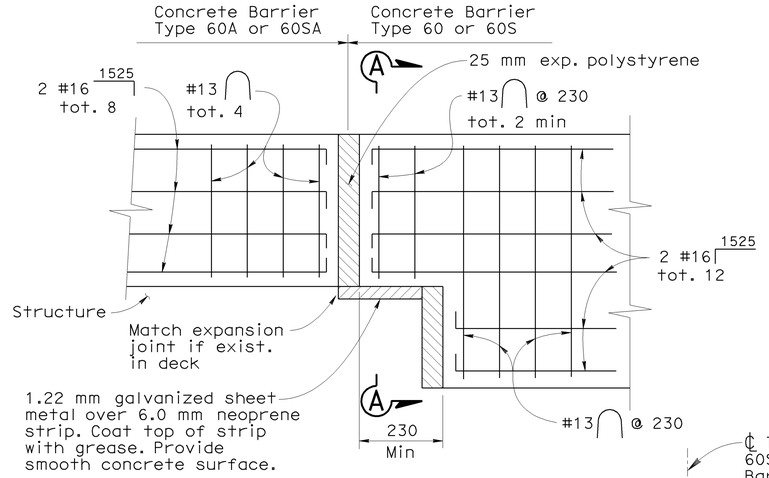

ELEVATION

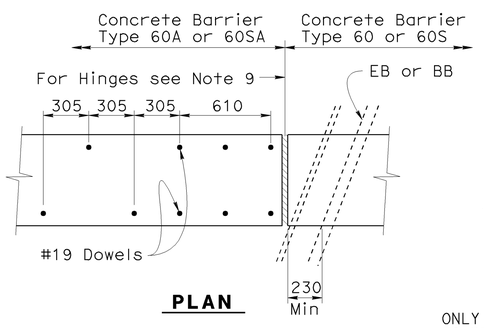

PLAN

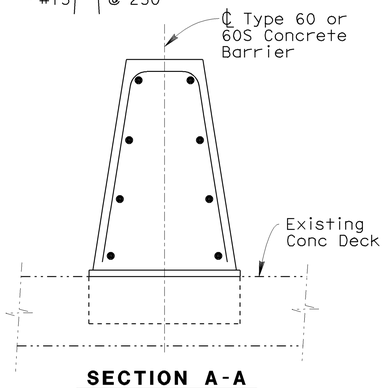

SECTION A-A

MODIFIED TYPE 60A.1

ONLY VERTICAL DIMENSION VARIES ACCORDING TO RESPECTIVE BARRIER HEIGHT. SEE NOTE 10.

CONNECTION TO STRUCTURE AT EXPANSION JOINTS

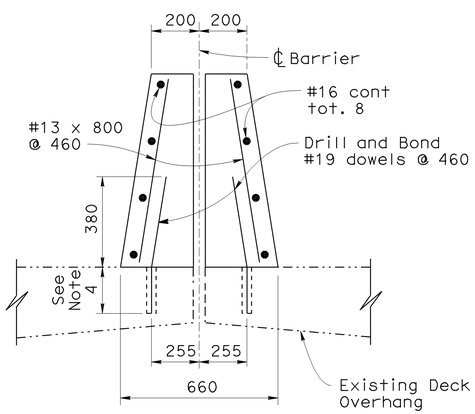

MODIFIED TYPE 60SA.3 OR 60A.3

ONLY VERTICAL DIMENSION VARIES ACCORDING TO RESPECTIVE BARRIER HEIGHT. SEE NOTE 10.

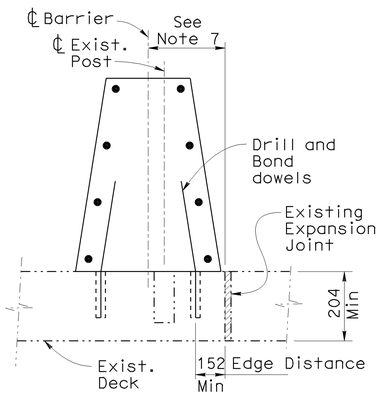

EXISTING POST HOLE

TYPE 1

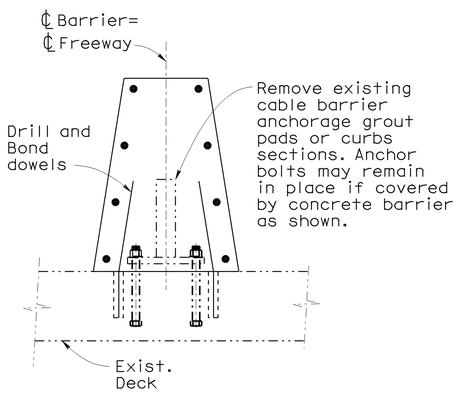

AT BOLTED ANCHORAGE PLATE

TYPE 2

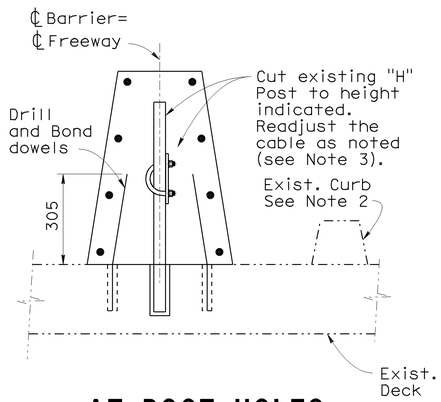

AT POST HOLES

TYPE 3

ASSUMED EXISTING ANCHORAGE CONDITIONS AND DETAILS

Caltrans Metric

DIST.	COUNTY	ROUTE	KILOMETER POST TOTAL PROJECT	SHEET NO.	TOTAL SHEETS

REGISTERED ENGINEER - CIVIL

PLANS APPROVAL DATE

REGISTERED PROFESSIONAL ENGINEER No. Exp. CIVIL STATE OF CALIFORNIA

The State of California or its officers or agents shall not be responsible for the accuracy or completeness of electronic copies of this plan sheet.

NOTES:

1. Transverse expansion joints in concrete barrier shall match all deck joints.
2. Remove all existing curbs and dikes.
3. Existing components of Cable Barrier may be altered and incorporated in Concrete Barriers as indicated. The existing Cable Barrier shall be removed when it is not on the centerline of the new Concrete Barrier.
4. Depth of drilled hole equals depth of slab minus 40 mm, up to 150 mm maximum.
5. Minor adjustments may be made in dowel spacing to clear main reinforcement.
6. Transitions to match adjacent "Type 60A" Barrier shall have minimum flare of 20:1 off the structure.
7. ℄ Barrier is either left, right, or on ℄ of freeway.
8. The Contractor shall verify all dependent dimensions in the field.
9. Barrier to be doweled on either side of deck joints. On skewed hinges, place sheet metal detail across joint and adjust dowels.
10. Barrier Dimensions-Type 60A & Type 60SA, See sketch below.

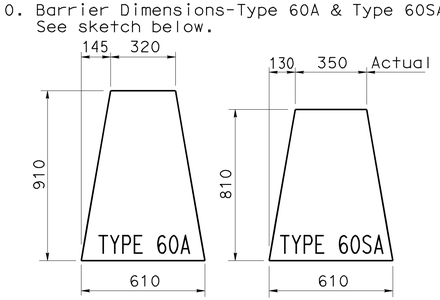

NO SCALE

ALL DIMENSIONS ARE IN MILLIMETERS UNLESS OTHERWISE SHOWN

STANDARD DRAWING				
RELEASE DATE 8/26/03	DESIGN BY Ralph Bishop	CHECKED Bob Anderson	RELEASED BY Roberto Anello OFFICE CHIEF	
FILE NO. xs16-100	DETAILS BY L. Charlot	CHECKED Ralph Bishop		
	SUBMITTED BY Ralph Bishop	DRAWING DATE 6/99		

STATE OF CALIFORNIA DEPARTMENT OF TRANSPORTATION

DIVISION OF ENGINEERING SERVICES

BRIDGE NO.

KILOMETER POST

BARRIER - CONCRETE TYPE 60A AND 60SA MODIFIED

DS OSD 2147A (METRIC) (REV. 2/25/97)

ORIGINAL SCALE IN MILLIMETERS FOR REDUCED PLANS 0 10 20 30 40 50 60 70 80 90 100

CU
EA

DISREGARD PRINTS BEARING EARLIER REVISION DATES

REVISION DATES (PRELIMINARY STAGE ONLY) SHEET OF

USERNAME => jsanchez

xs16-100.dgn

DATE PLOTTED => 16-JAN-2004 TIME PLOTTED => 15:11