DIST	COUNTY	ROUTE	KILOMETER POST TOTAL PROJECT	SHEET No	TOTAL

Caltrans Metric

REGISTERED CIVIL ENGINEER

PLANS APPROVAL DATE

REGISTERED PROFESSIONAL ENGINEER No. Exp. CIVIL STATE OF CALIFORNIA

The State of California or its officers or agents shall not be responsible for the accuracy or completeness of electronic copies of this plan sheet.

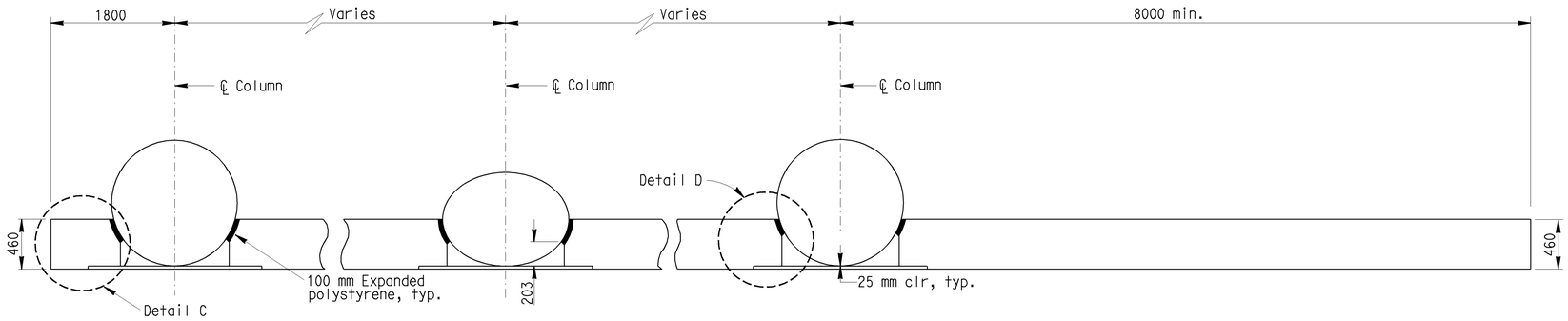

PLAN-CIRCULAR COLUMNS

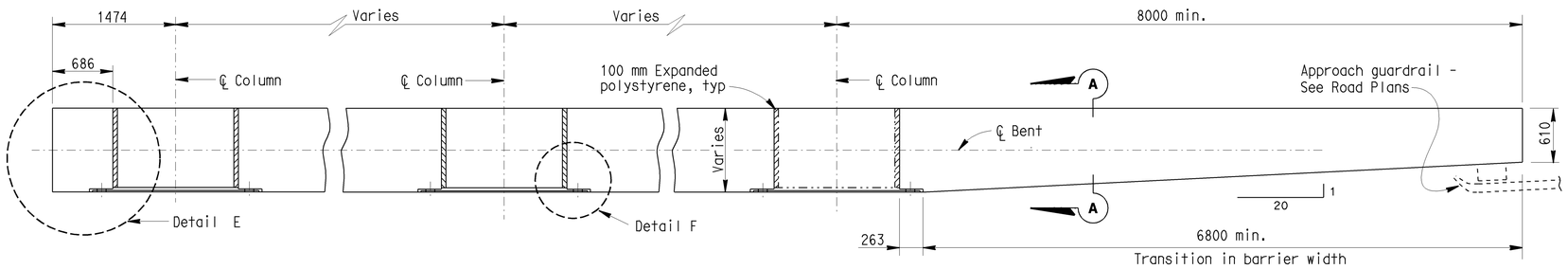

PLAN-RECTANGULAR COLUMNS

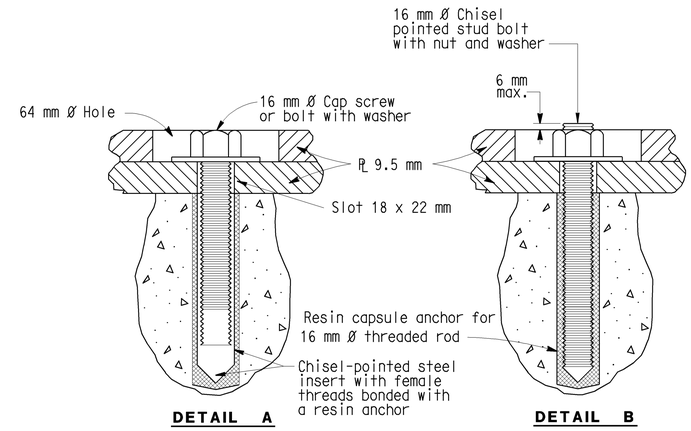

ALTERNATIVE ANCHORAGE

See Notes 1 and 2

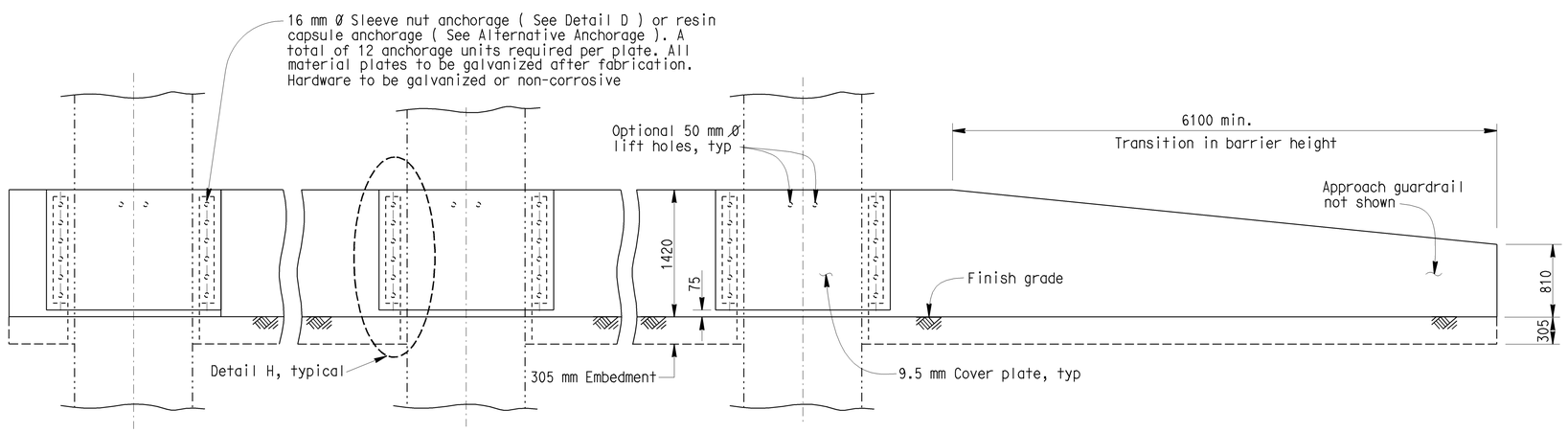

ELEVATION

NOTES:

1. Resin capsule anchorage is subject to approval of the engineer. Installation procedures shall comply with manufacturer's instructions.
2. Detail B similar to Detail A except for anchorage devices.
3. For drainage control, see "Roadway Plans".
4. The contractor shall verify all controlled field dimensions before ordering or fabricating any materials.

NO SCALE

ALL DIMENSIONS ARE IN MILLIMETERS UNLESS OTHERWISE SHOWN

STANDARD DRAWING

RELEASE DATE 8/26/03	DESIGN	BY N ABDIN	CHECKED FELIX ALTAMIRANO	RELEASED BY
FILE NO. xs16-110-1	DETAILS	BY R YEE	CHECKED N ABDIN	OFFICE CHIEF
	SUBMITTED	BY N ABDIN	DRAWING DATE 8/99	

STATE OF CALIFORNIA DEPARTMENT OF TRANSPORTATION

DIVISION OF ENGINEERING SERVICES

BRIDGE NO.

KILOMETER POST

BARRIER - CONCRETE TYPE 60 VERTICAL FACE FOR SIDE OF ROAD

STRUCTURES STANDARD DRAWING SHEET (METRIC) (REV. 3/1/99)

ORIGINAL SCALE IN MILLIMETERS FOR REDUCED PLANS 0 10 20 30 40 50 60 70 80 90 100

CU EA

DISREGARD PRINTS BEARING EARLIER REVISION DATES

REVISION DATES (PRELIMINARY STAGE ONLY)

SHEET 1 OF 2

USERNAME => jsanchez

xs16-110-1.dgn

USERNAME => jsanchez DATE PLOTTED => 16-JAN-2004 TIME PLOTTED => 15:11