DIST	COUNTY	ROUTE	KILOMETER POST TOTAL PROJECT	SHEET No	TOTAL

Caltrans Metric

REGISTERED CIVIL ENGINEER

PLANS APPROVAL DATE

REGISTERED PROFESSIONAL ENGINEER No. Exp. CIVIL STATE OF CALIFORNIA

The State of California or its officers or agents shall not be responsible for the accuracy or completeness of electronic copies of this plan sheet.

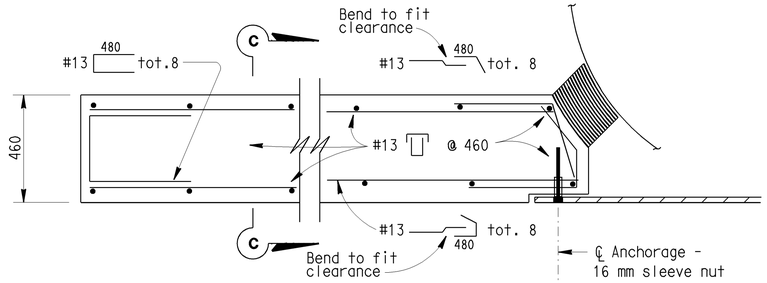

DETAIL C

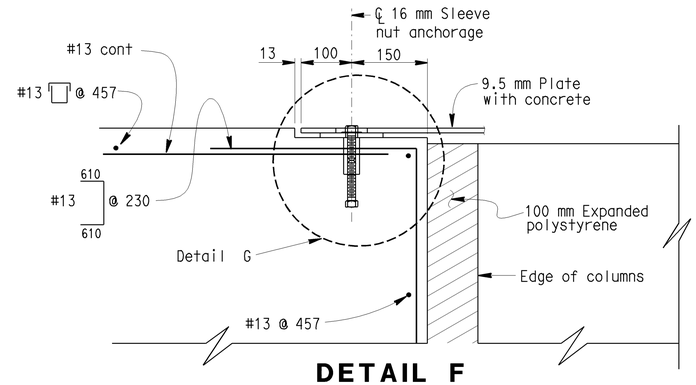

DETAIL F

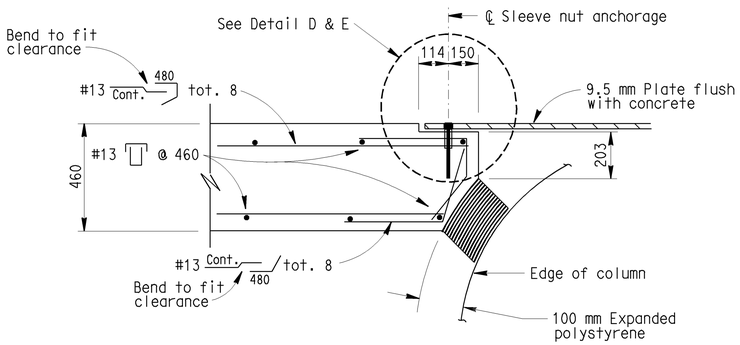

DETAIL D

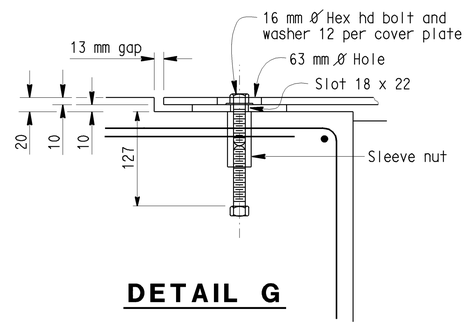

DETAIL G

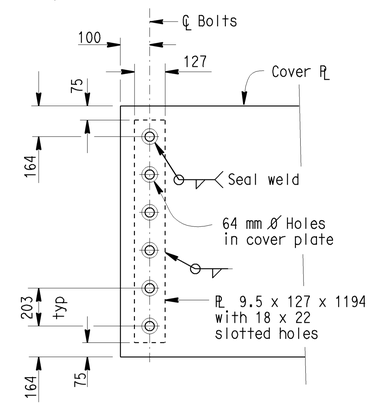

DETAIL H

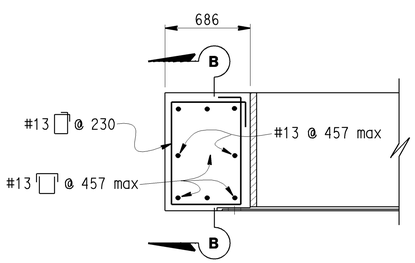

DETAIL E

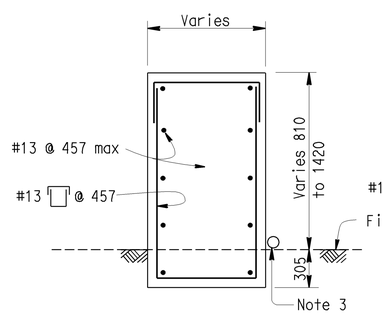

SECTION A-A

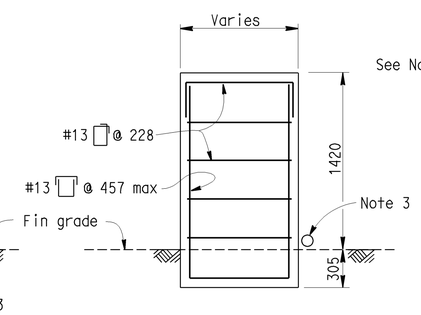

SECTION B-B

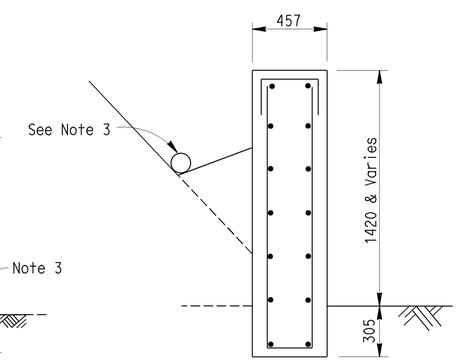

SECTION C-C

NO SCALE

ALL DIMENSIONS ARE IN MILLIMETERS UNLESS OTHERWISE SHOWN

STANDARD DRAWING				
RELEASE DATE 8/26/03	DESIGN BY N ABDIN	CHECKED FELIX ALTAMIRANO	RELEASED BY Roberto Lacalle OFFICE CHIEF	
	DETAILS BY R YEE	CHECKED N ABDIN		
FILE NO. xs16-110-2	SUBMITTED BY N ABDIN	DRAWING DATE 8/99		

STRUCTURES STANDARD DRAWING SHEET (METRIC) (REV. 3/1/99)

STATE OF CALIFORNIA DEPARTMENT OF TRANSPORTATION

DIVISION OF ENGINEERING SERVICES

BRIDGE NO.

KILOMETER POST

BARRIER - CONCRETE TYPE 60 VERTICAL FACE FOR SIDE OF ROAD

ORIGINAL SCALE IN MILLIMETERS FOR REDUCED PLANS 0 10 20 30 40 50 60 70 80 90 100

CU EA

DISREGARD PRINTS BEARING EARLIER REVISION DATES

REVISION DATES (PRELIMINARY STAGE ONLY)

SHEET 2 OF 2

USERNAME => jsanchez

xs16-110-2.dgn

USERNAME => jsanchez DATE PLOTTED => 16-JAN-2004 TIME PLOTTED => 15:12