DIST.	COUNTY	ROUTE	KILOMETER POST TOTAL PROJECT	SHEET NO.	TOTAL SHEETS

Caltrans Metric

REGISTERED ENGINEER - CIVIL

PLANS APPROVAL DATE

REGISTERED PROFESSIONAL ENGINEER No. Exp. CIVIL STATE OF CALIFORNIA

The State of California or its officers or agents shall not be responsible for the accuracy or completeness of electronic copies of this plan sheet.

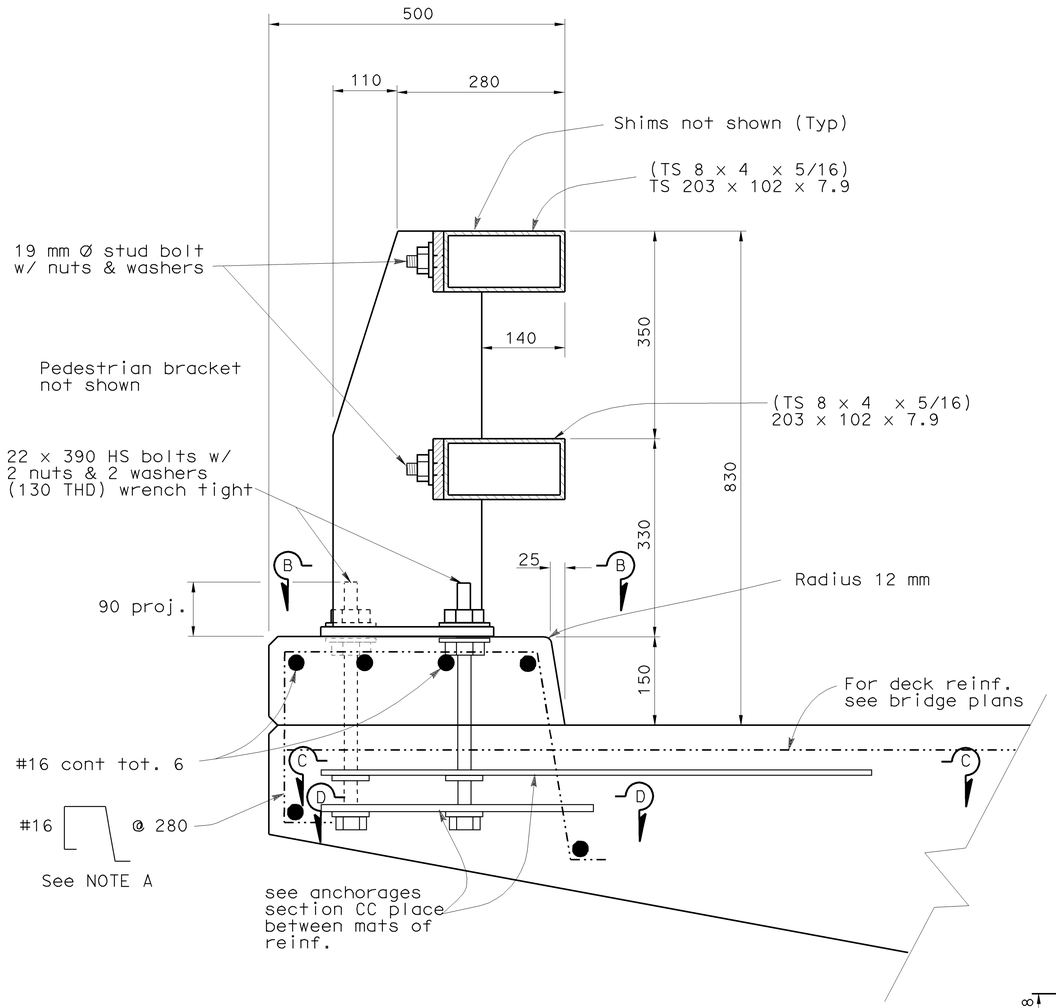

TYPICAL RAIL SECTION

Scale 1:5

NOTE A

Adjust spacing to clear Scupper openings by 50mm if applicable.

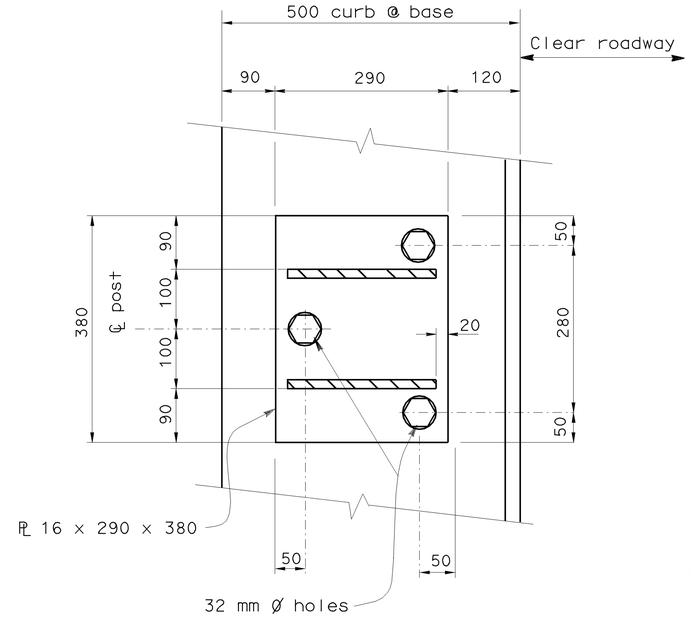

SECTION B-B

No scale

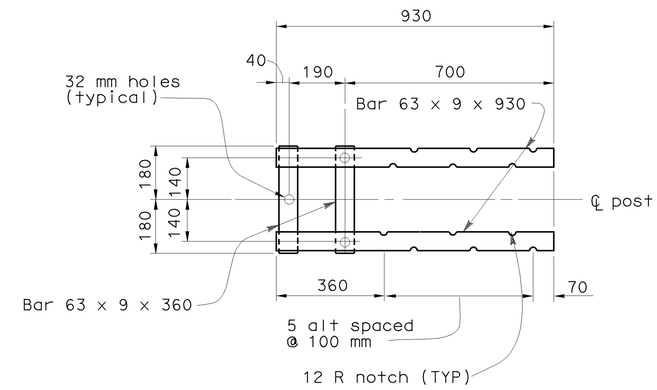

SECTION C-C

Top Anchorage
No scale

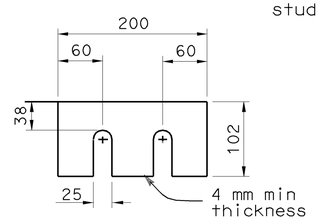

Shims required for top and bottom rail

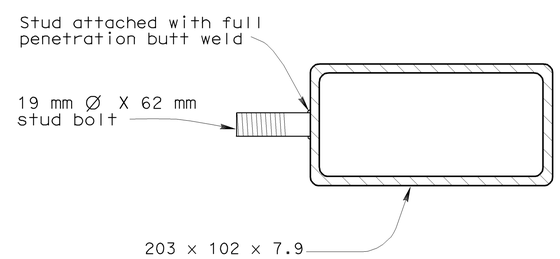

SECTION AT POST

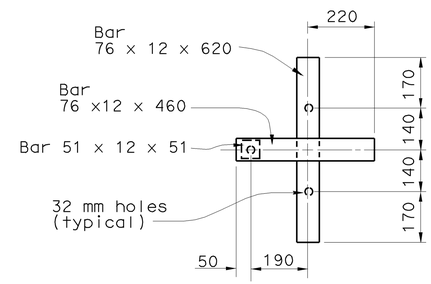

SECTION D-D

Lower Anchorage
No scale

STUD BOLT DETAIL

No scale

ALL DIMENSIONS ARE IN MILLIMETERS UNLESS OTHERWISE SHOWN

STANDARD DRAWING					
RELEASE DATE 8/26/03	DESIGN	BY N ABDIN	CHECKED VINDY KWOK	RELEASED BY	
FILE NO. xs16-200-1	DETAILS	BY P C WELLS	CHECKED VINDY KWOK		
	SUBMITTED	BY N ABDIN	DRAWING DATE 10/02	OFFICE CHIEF	

STATE OF CALIFORNIA
DEPARTMENT OF TRANSPORTATION

DIVISION OF ENGINEERING SERVICES

BRIDGE NO.

KILOMETER POST

RAILING - STEEL TYPE ST-10 RAIL

DETAILS NO. 1

DS OSD 2147A (METRIC) (REV. X/XX/XX)

ORIGINAL SCALE IN MILLIMETERS FOR REDUCED PLANS 0 10 20 30 40 50 60 70 80 90 100

CU
EA

DISREGARD PRINTS BEARING EARLIER REVISION DATES

REVISION DATES (PRELIMINARY STAGE ONLY)

SHEET 1 OF 3

USERNAME => jsanchez

xs16-200-1.dgn

DATE PLOTTED => 16-JAN-2004 TIME PLOTTED => 15:12