DIST.	COUNTY	ROUTE	KILOMETER POST TOTAL PROJECT	SHEET NO.	TOTAL SHEETS

Caltrans Metric

REGISTERED ENGINEER - CIVIL

PLANS APPROVAL DATE

REGISTERED PROFESSIONAL ENGINEER No. Exp. CIVIL STATE OF CALIFORNIA

The State of California or its officers or agents shall not be responsible for the accuracy or completeness of electronic copies of this plan sheet.

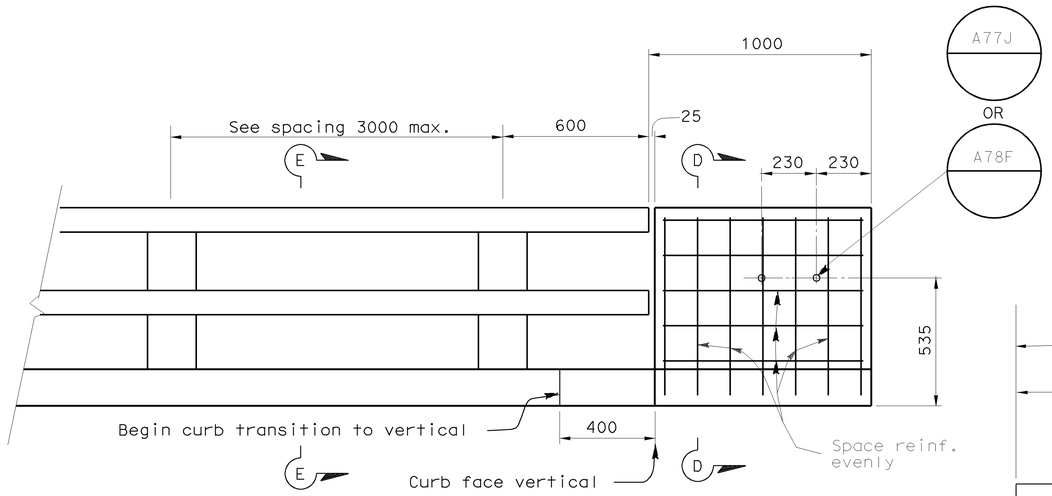

END OF RAILING ELEVATION

No scale

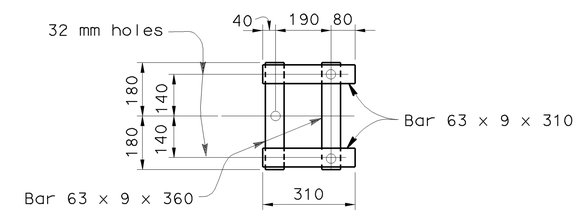

WALL ANCHOR PLATE DETAIL

No scale

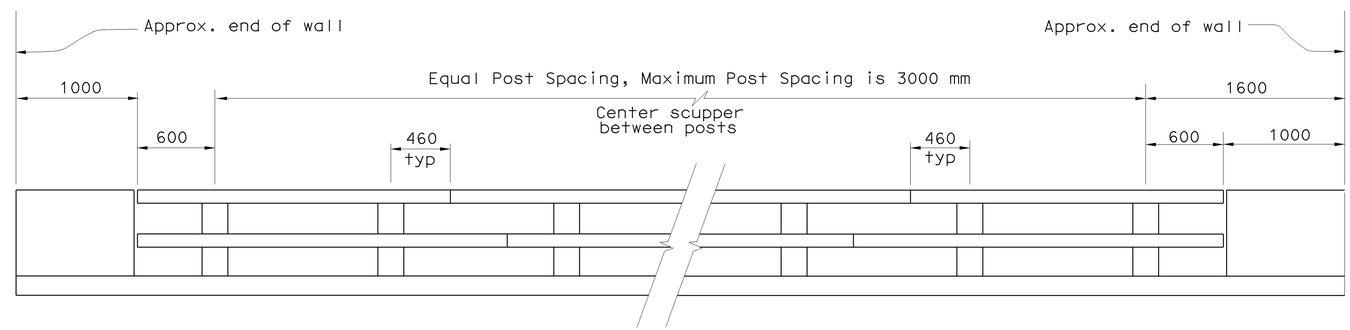

PROPOSED RAIL POST LAYOUT

See Note 2

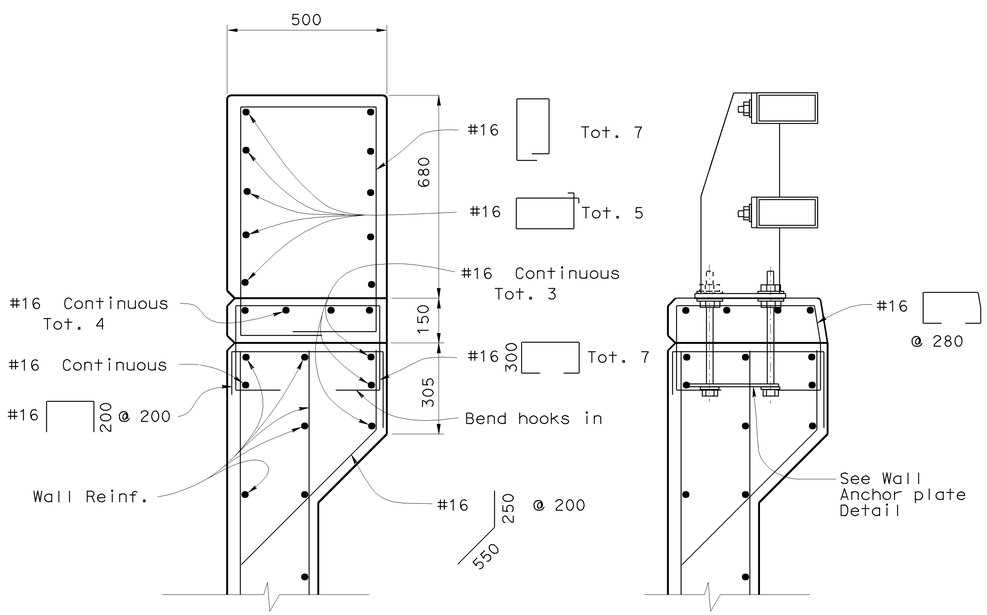

SECTION D-D

No scale

SECTION E-E

No scale

Reinf. same as for Section D-D except as noted.

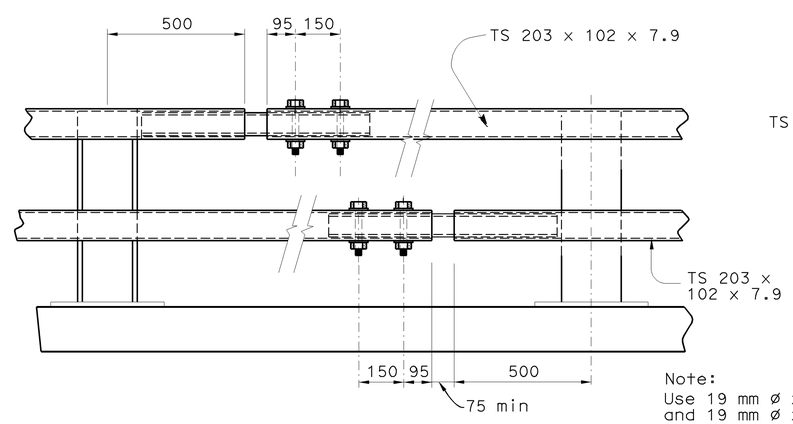

EXPANSION SPLICE

No scale

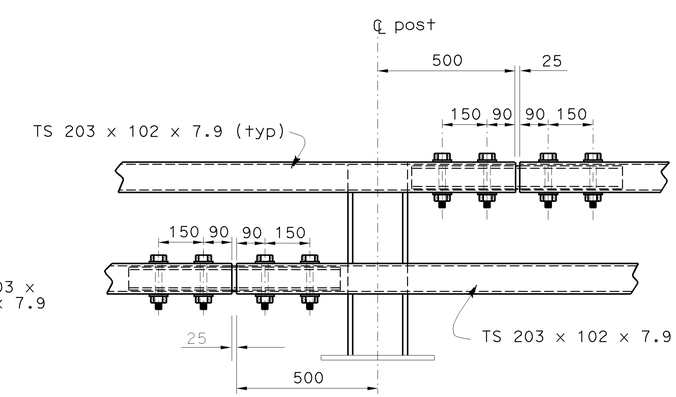

Note:
Use 19 mm ø x 152 mm (top rail) and 19 mm ø x 152 mm (bottom rail) HS bolts w/ washers,

25 mm holes in rail (typ) wrench tight

STANDARD SPLICE

No scale

STANDARD DRAWING					
RELEASE DATE 8/26/03	DESIGN	BY N ABDIN	CHECKED VINDY KWOK	RELEASED BY	
FILE NO. xs16-200-3	DETAILS	BY P C WELLS	CHECKED VINDY KWOK		
	SUBMITTED	BY N ABDIN	DRAWING DATE 10/02	OFFICE CHIEF	

STATE OF CALIFORNIA DEPARTMENT OF TRANSPORTATION

DIVISION OF ENGINEERING SERVICES

BRIDGE NO.

KILOMETER POST

RAILING - STEEL TYPE ST-10 RAIL

DETAILS NO. 3

DS OSD 2147A (METRIC) (REV. X/XX/XX)

ORIGINAL SCALE IN MILLIMETERS FOR REDUCED PLANS 0 10 20 30 40 50 60 70 80 90 100

CU EA

DISREGARD PRINTS BEARING EARLIER REVISION DATES

REVISION DATES (PRELIMINARY STAGE ONLY)

SHEET 3 OF 3

USERNAME => jsanchez

xs16-200-3.dgn

DATE PLOTTED => 16-JAN-2004 TIME PLOTTED => 15:13