DIST.	COUNTY	ROUTE	KILOMETER POST TOTAL PROJECT	SHEET NO.	TOTAL SHEETS

Caltrans Metric

REGISTERED ENGINEER - CIVIL

PLANS APPROVAL DATE

REGISTERED PROFESSIONAL ENGINEER No. Exp. CIVIL STATE OF CALIFORNIA

The State of California or its officers or agents shall not be responsible for the accuracy or completeness of electronic copies of this plan sheet.

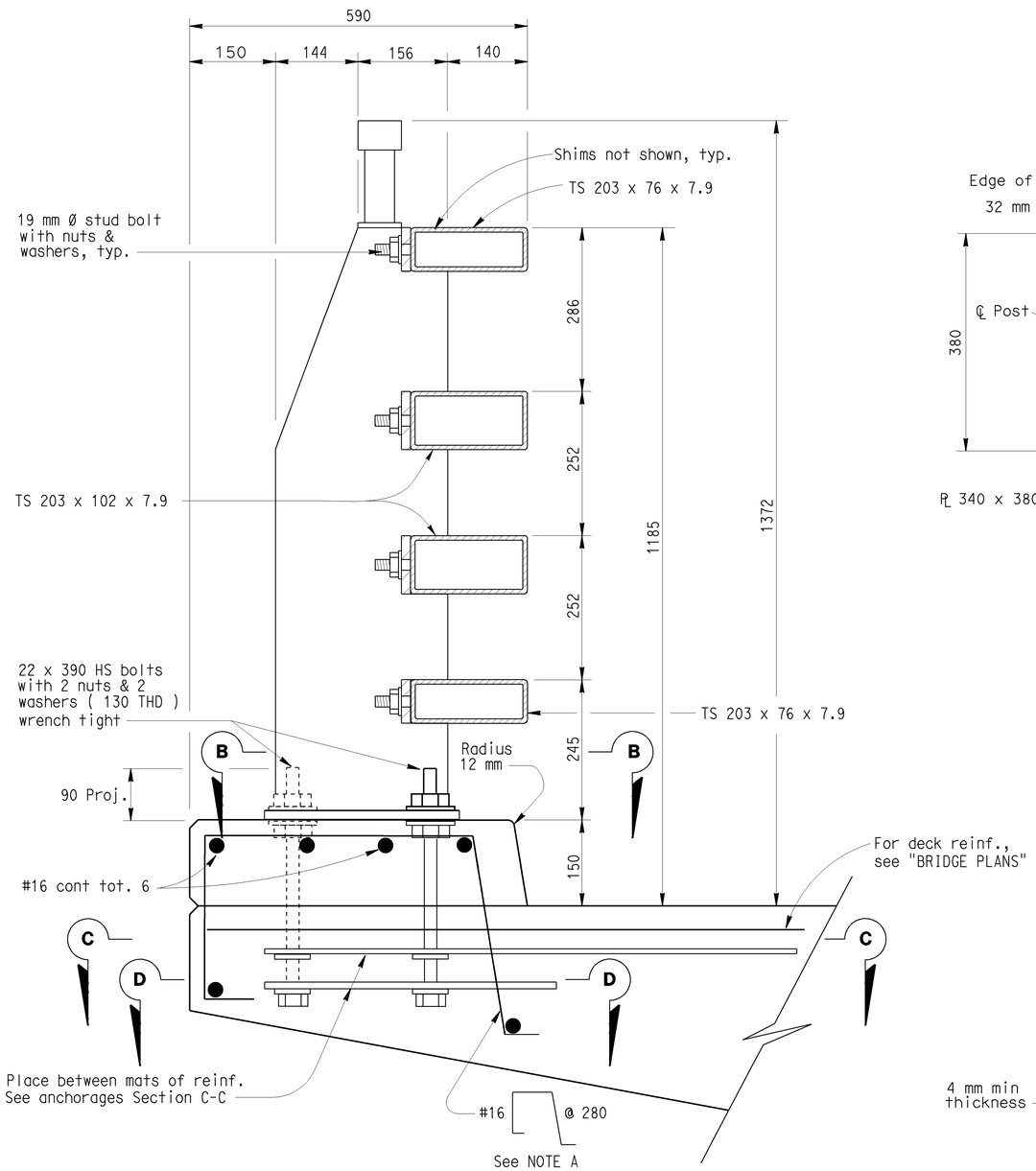

TYPICAL RAIL SECTION

Scale 1:5

NOTE A: Adjust spacing to clear scupper openings by 50 mm if applicable.

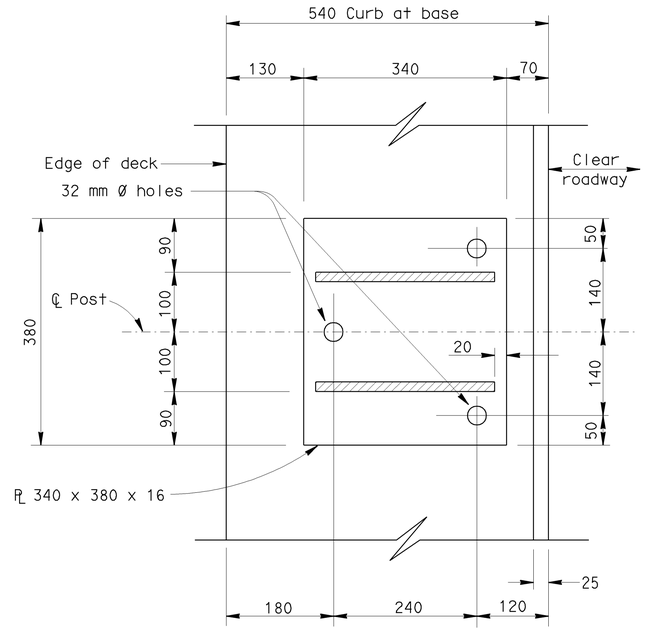

SECTION B-B

No Scale

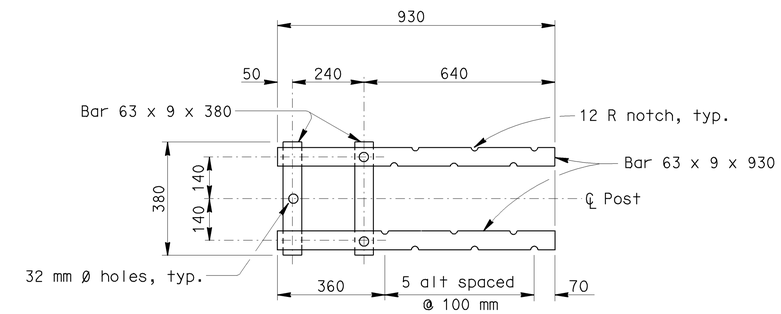

SECTION C-C

Top Anchorage
No Scale

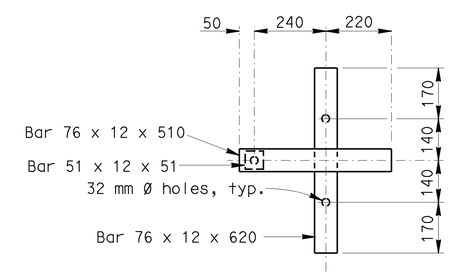

SECTION D-D

Lower Anchorage
No Scale

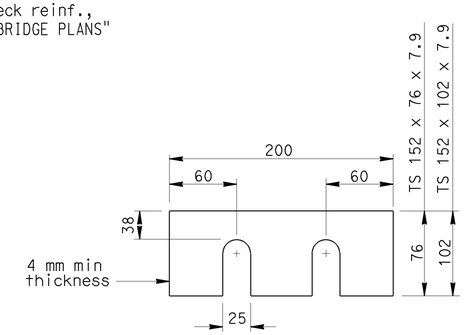

SHIMS REQUIRED FOR ALL RAILS

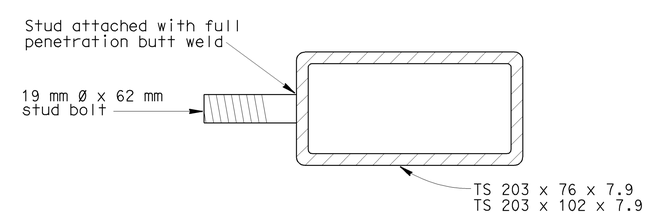

SECTION AT POST

STUD BOLT DETAIL

No scale

ALL DIMENSIONS ARE IN MILLIMETERS UNLESS OTHERWISE SHOWN

STANDARD DRAWING				
RELEASE DATE 10/21/04	DESIGN BY N ABDIN	CHECKED FELIX ALTAMIRANO	RELEASED BY	
FILE NO. xs16-205-1	DETAILS BY R YEE	CHECKED N ABDIN		
	SUBMITTED BY N ABDIN	DRAWING DATE 10/20/04	OFFICE CHIEF	

STATE OF CALIFORNIA DEPARTMENT OF TRANSPORTATION

DIVISION OF ENGINEERING SERVICES

BRIDGE NO.

KILOMETER POST

RAILING - STEEL TYPE ST-20S RAIL

DETAILS NO. 1

DS OSD 2147A (METRIC) (REV. X/XX/XX)

ORIGINAL SCALE IN MILLIMETERS FOR REDUCED PLANS 0 10 20 30 40 50 60 70 80 90 100

CU EA

DISREGARD PRINTS BEARING EARLIER REVISION DATES

REVISION DATES (PRELIMINARY STAGE ONLY)

SHEET 1 OF 4

USERNAME => jsanchez

xs16-205-1.dgn

DATE PLOTTED => 01-APR-2005 TIME PLOTTED => 13:37