DIST.	COUNTY	ROUTE	KILOMETER POST TOTAL PROJECT	SHEET NO.	TOTAL SHEETS

Caltrans Metric

REGISTERED ENGINEER - CIVIL

PLANS APPROVAL DATE

REGISTERED PROFESSIONAL ENGINEER No. Exp. CIVIL STATE OF CALIFORNIA

The State of California or its officers or agents shall not be responsible for the accuracy or completeness of electronic copies of this plan sheet.

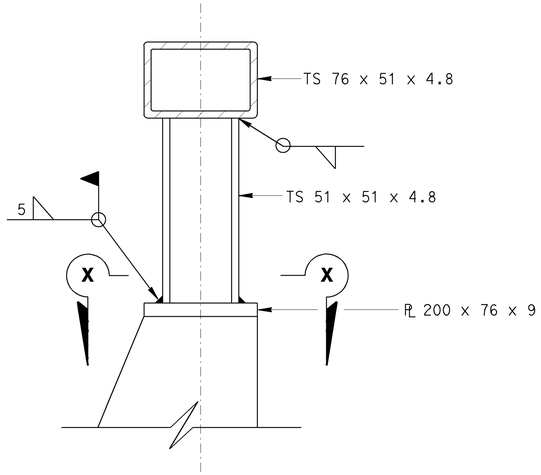

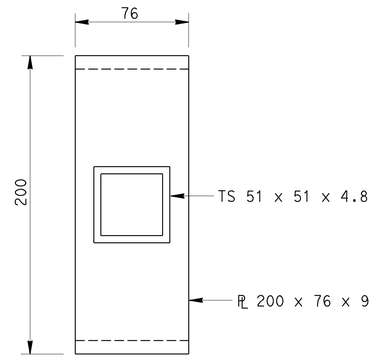

SECTION X-X

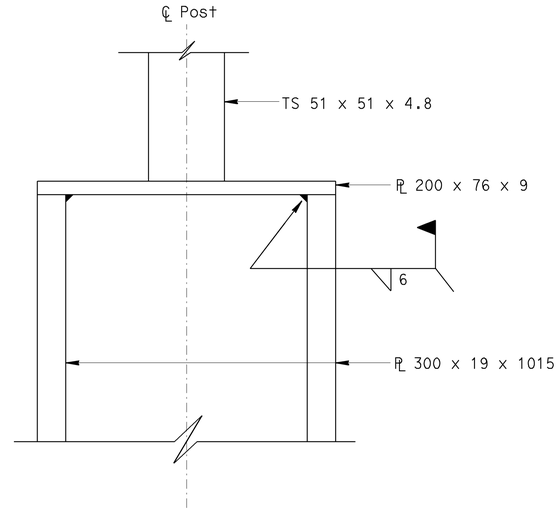

RAIL CONNECTION DETAILS

No Scale

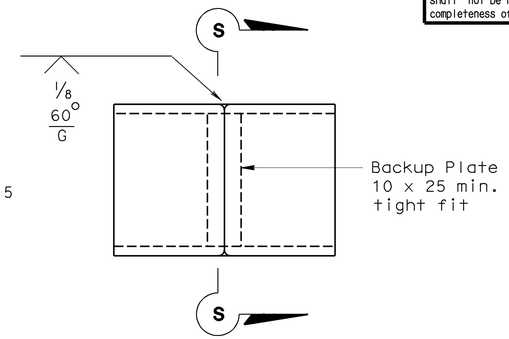

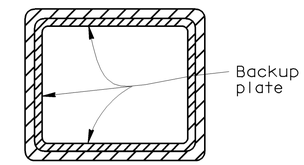

SECTION S-S

ALTERNATE TUBE WELDED SPLICE

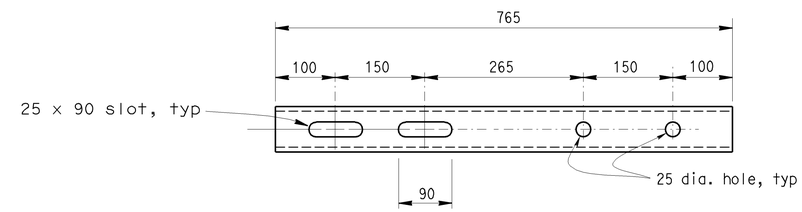

EXPANSION SLEEVE DETAIL

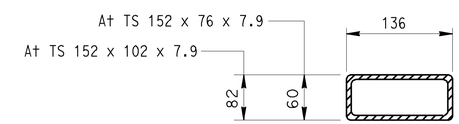

SECTION SLEEVE

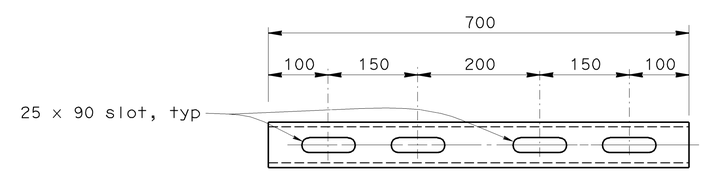

STANDARD SLEEVE DETAIL

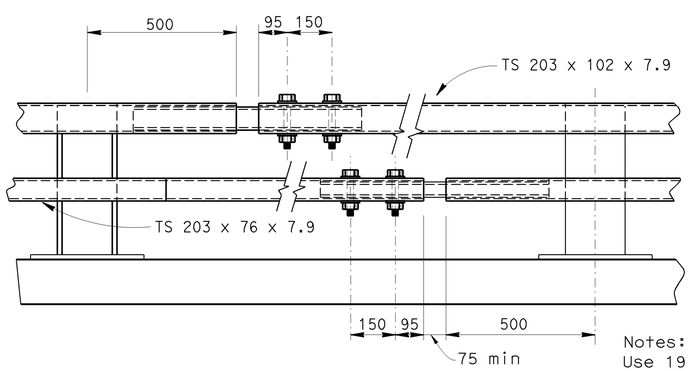

EXPANSION SPLICE

No scale

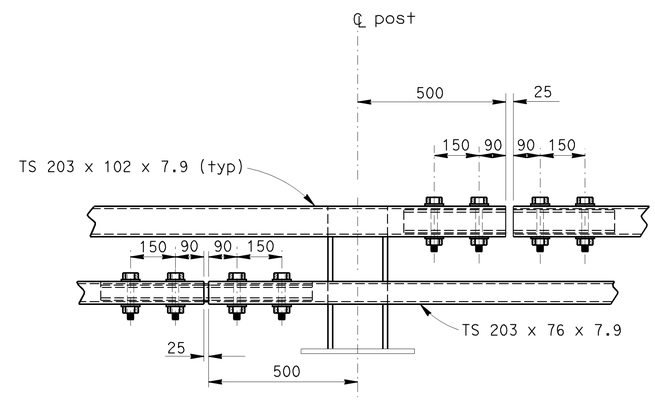

Notes:
Use 19 mm Ø x 152 mm (top rail)
and 19 mm Ø x 152 mm (bottom rail)
HS bolts with washers,

25 mm Ø holes in rail (typ)
wrench tight

Top 2 rails not shown for clarity.

STANDARD SPLICE

No scale

ALL DIMENSIONS ARE IN
MILLIMETERS UNLESS OTHERWISE SHOWN

STANDARD DRAWING				
RELEASE DATE 10/21/04	DESIGN	BY N ABDIN	CHECKED FELIX ALTAMIRANO	RELEASED BY
FILE NO. xs16-205-4	DETAILS	BY R YEE	CHECKED FELIX ALTAMIRANO	
	SUBMITTED	BY N ABDIN	DRAWING DATE 10/20/04	OFFICE CHIEF

STATE OF CALIFORNIA
DEPARTMENT OF TRANSPORTATION

DIVISION OF ENGINEERING SERVICES

BRIDGE NO.

KILOMETER POST

RAILING - STEEL TYPE ST-20S RAIL
DETAILS NO. 4

DS OSD 2147A (METRIC) (REV. X/XX/XX)

ORIGINAL SCALE IN MILLIMETERS FOR REDUCED PLANS 0 10 20 30 40 50 60 70 80 90 100

CU
EA

DISREGARD PRINTS BEARING EARLIER REVISION DATES

REVISION DATES (PRELIMINARY STAGE ONLY)

SHEET 4 OF 4

USERNAME => jsanchez

xs16-205-4.dgn

DATE PLOTTED => 01-APR-2005 TIME PLOTTED => 13:37