DIST.	COUNTY	ROUTE	KILOMETER POST TOTAL PROJECT	SHEET NO.	TOTAL SHEETS

Caltrans Metric

REGISTERED ENGINEER - CIVIL

PLANS APPROVAL DATE

REGISTERED PROFESSIONAL ENGINEER No. Exp. CIVIL STATE OF CALIFORNIA

The State of California or its officers or agents shall not be responsible for the accuracy or completeness of electronic copies of this plan sheet.

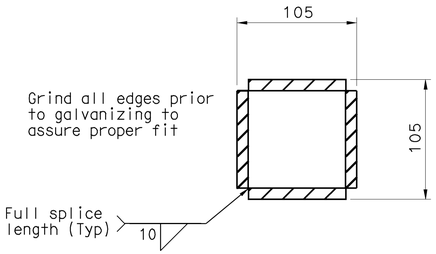

SPLICE SLEEVE

Make from 10 mm plates
Splice to fit freely
inside TS 127 x 127 x 7.9

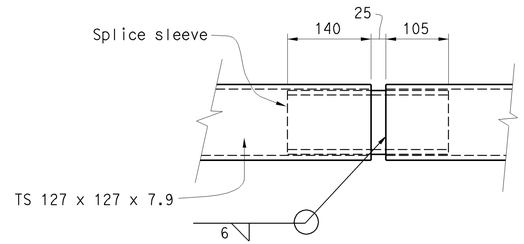

EXPANSION JOINT

See Note A

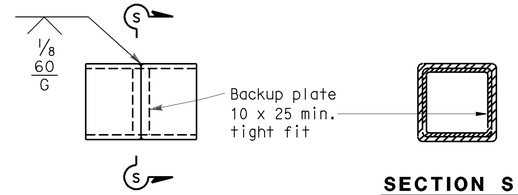

SECTION S-S

ALTERNATE TUBE WELDED SPLICE

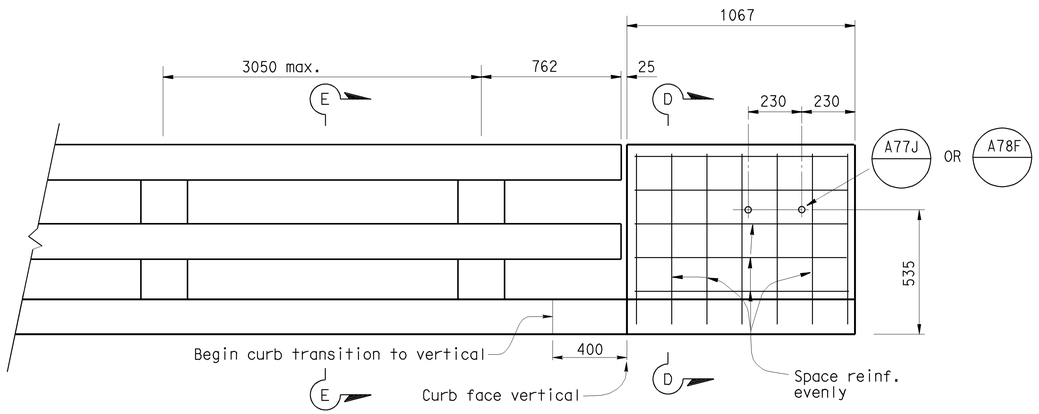

END OF RAILING ELEVATION

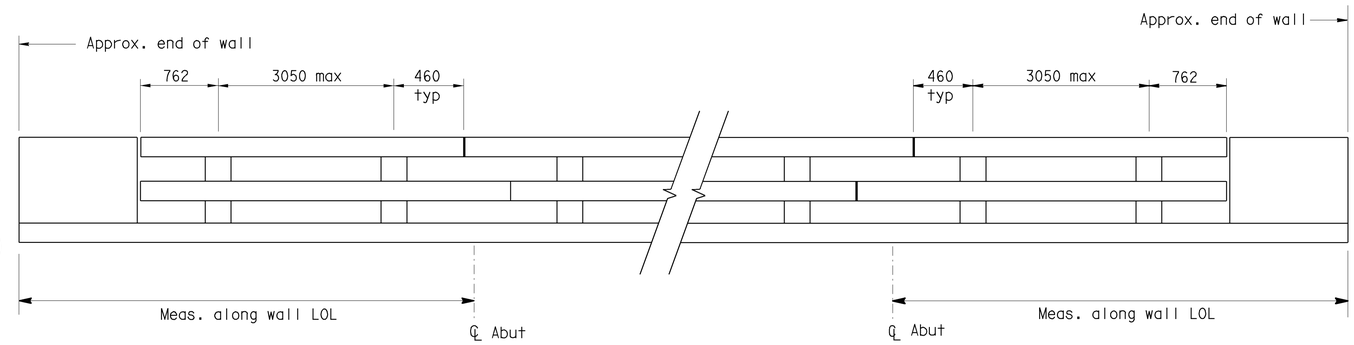

RAIL POST LAYOUT

(See Note 2)

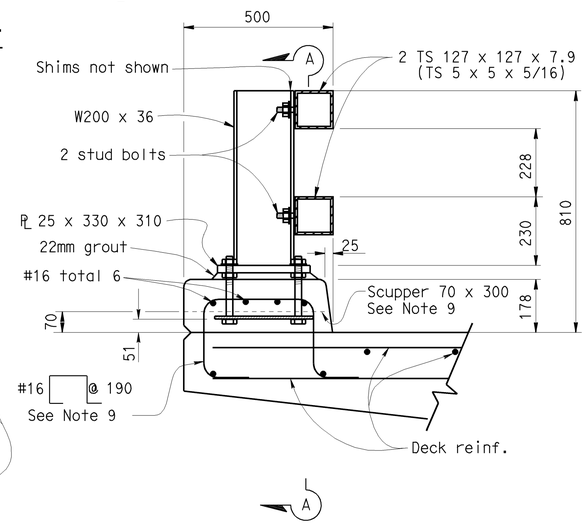

TYPICAL SECTION

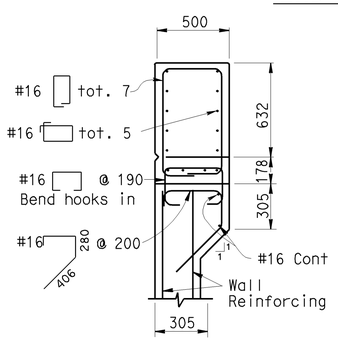

SECTION D-D

On Wingwall

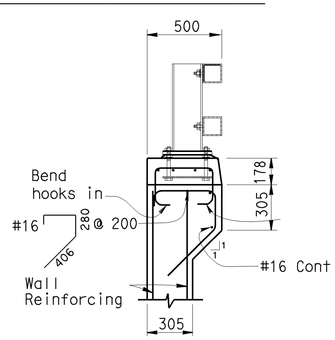

SECTION E-E

On Wingwall

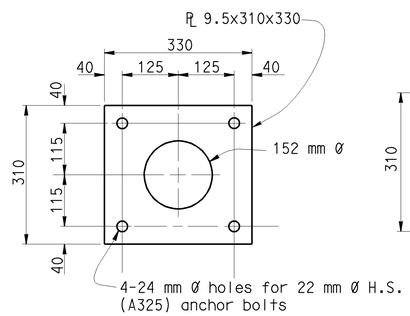

SECTION B-B

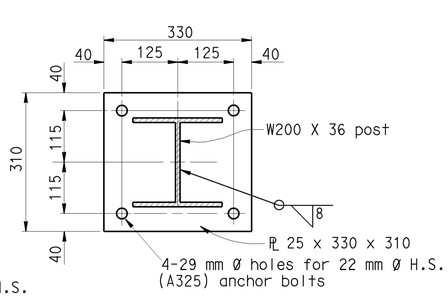

BASE PLATE DETAIL

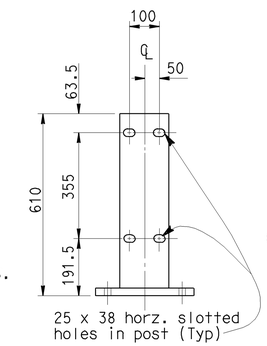

SECTION A-A

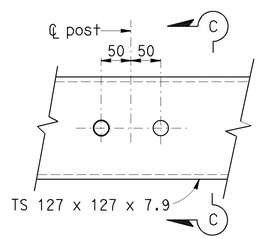

STUD BOLT DETAIL

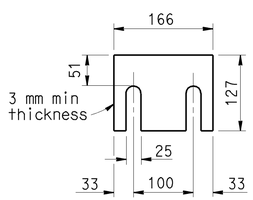

RAILING SHIM DETAIL

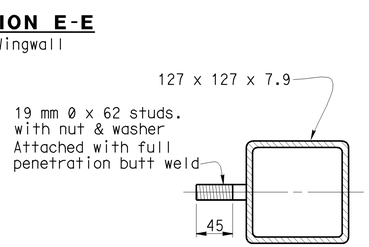

SECTION C-C

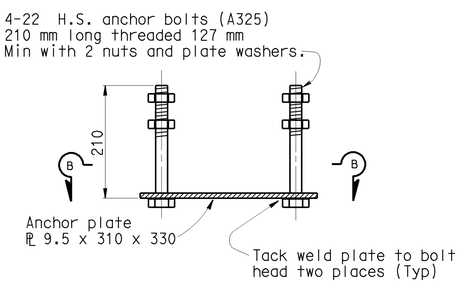

ANCHOR BOLT DETAILS

Material

A) All structural steel shall be A36, structural tubing shall be A500 grade B except as noted.

B) All bolts shall be high strength conforming to ASTM A325 galvanized and wrench tight.

C) Stud bolts shall be ASTM A108 and torque to 136 Nm.

General notes:

1) All structural steel shall be galvanized after fabrication.
2) Proposed railing layout shown is approximate. Railing layout shall be reviewed by engineer before fabrication.
3) Post shall be normal to railing.
4) Tubing shall be bent or fabricated to fit horizontal curve when curve is less than 273 meters.
5) All exposed corners shall be grounded smooth.
6) Tubing shall be continuous over not less than 3 intermediate posts.
7) Expansion joints in rail tubes shall match deck expansion joints.
8) See contract plans for approach guardrail details.
9) If required, place scuppers midway between rail posts near ℄ spans. Adjust Reinf. spacing to clear openings.

NO SCALE

ALL DIMENSIONS ARE IN MILLIMETERS UNLESS OTHERWISE SHOWN

STANDARD DRAWING

RELEASE DATE 8/26/03	DESIGN	BY NAHED ABDIN	CHECKED VINDY KWOK	RELEASED BY	
FILE NO. xs16-210	DETAILS	BY P C WELLS	CHECKED VINDY KWOK		
	SUBMITTED	BY NAHED ABDIN	DRAWING DATE 6/01	OFFICE CHIEF	

STATE OF CALIFORNIA
DEPARTMENT OF TRANSPORTATION

DIVISION OF ENGINEERING SERVICES

BRIDGE NO.

KILOMETER POST

RAILING - STEEL TYPE ALASKA RAIL

DS OSD 2147A (METRIC) (REV. 2/25/97)

ORIGINAL SCALE IN MILLIMETERS FOR REDUCED PLANS 0 10 20 30 40 50 60 70 80 90 100

CU
EA

DISREGARD PRINTS BEARING EARLIER REVISION DATES

REVISION DATES (PRELIMINARY STAGE ONLY)

SHEET 1 OF 1

USERNAME => jsanchez

xs16-210.dgn

DATE PLOTTED => 16-JAN-2004 TIME PLOTTED => 15:13